NRCS Natural Resources Conservation Service	RUBBER TIRE WATERING TANK TANK GALLON CALCULATOR	ALABAMA DRAWING NO. AL-ENG-614-04 APPROVED BY: TGH DRAWN BY: RXS ISSUE DATE: 05/13

TANK ELEVATION

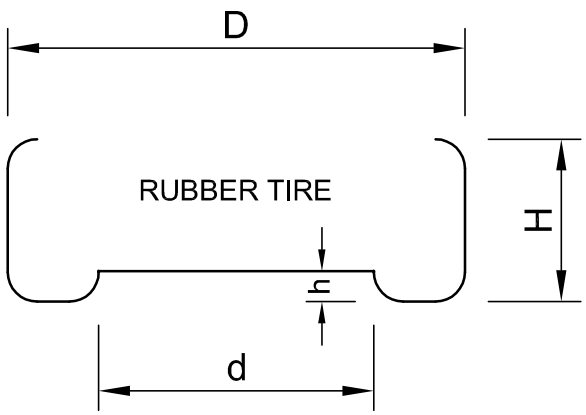

TANK PLAN

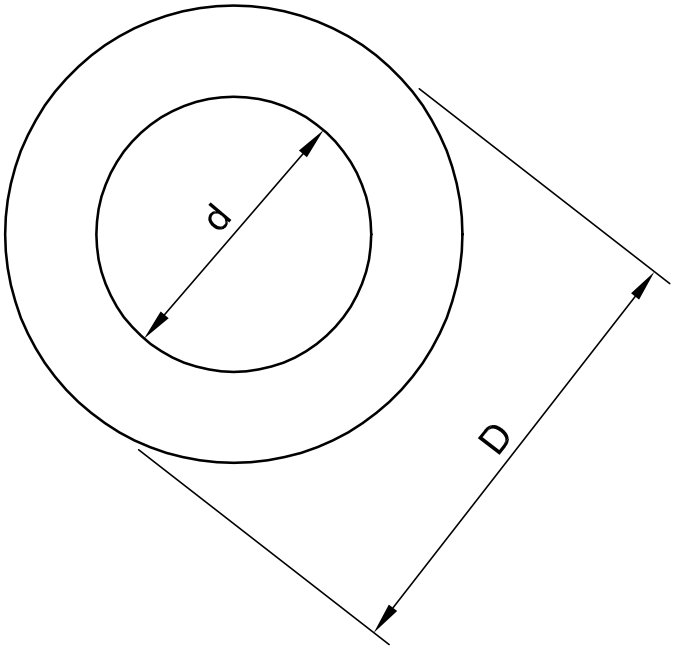

FORMULAS

$$V_1 = \frac{3.1416 \times D \times D \times H}{4}$$

$$V_2 = \frac{3.1416 \times d \times d \times h}{4}$$

$$V_{TOTAL} = (V_1 - V_2) \times 7.48$$

Data must be entered in decimal feet.

Example to convert ft./in. to decimal feet:

Measured 2'-11"
Take 11 x .083333 to convert to decimal. Then add the ft.

11 x .083333 + 2 = 2.9167

or

Take total inches (35") x .083333

35 x .083333 = 2.9167

INPUT IN FEET

D =

H =

d =

h =

V_{TOTAL} = 0.0 GALLONS

_____LANDOWNER	JOB CLASS	Designed / Drawn / Checked / Approved — Date
_____COUNTY, ALABAMA	CAD FILE NO. AL-ENG-614-04	
	SHEET OF	
USDA - NATURAL RESOURCES CONSERVATION SERVICE		