DETAIL P
n.t.s.

8", 10", 12", 15", and 18" DIAMETER PIPE

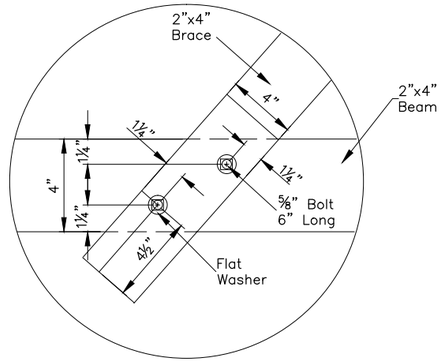

21" and 24" DIAMETER PIPE

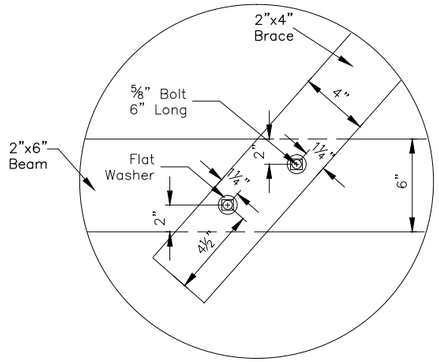

30" and 36" DIAMETER PIPE

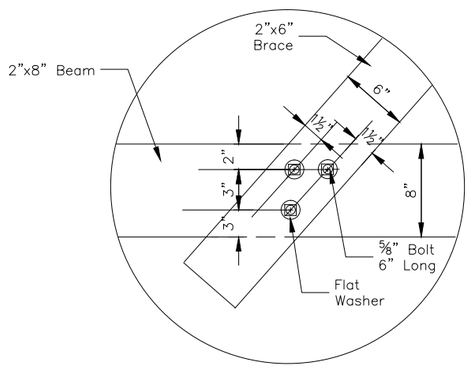

42" and 48" DIAMETER PIPE

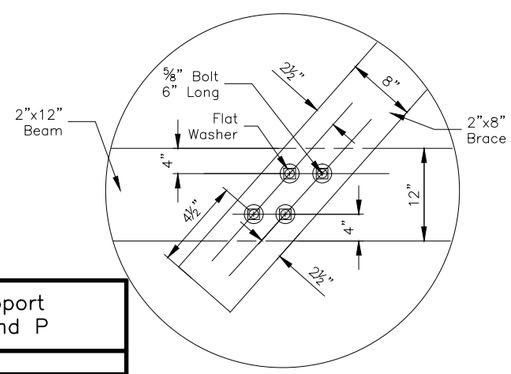

DETAIL N
n.t.s.

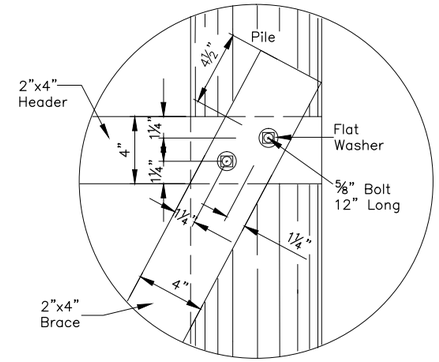

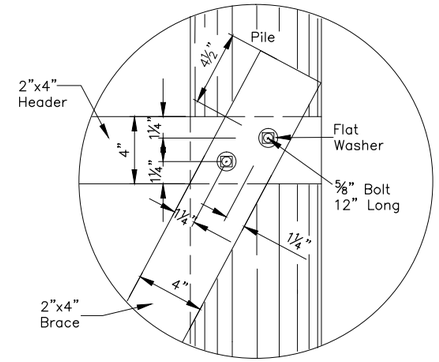

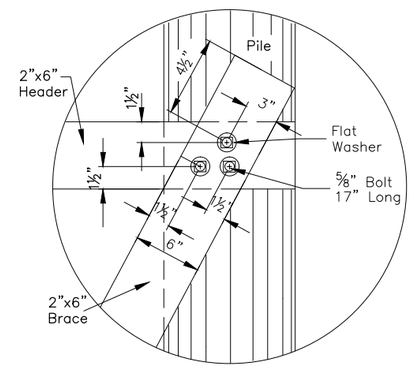

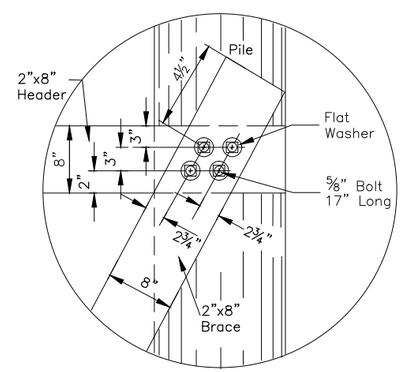

DETAIL M
n.t.s.

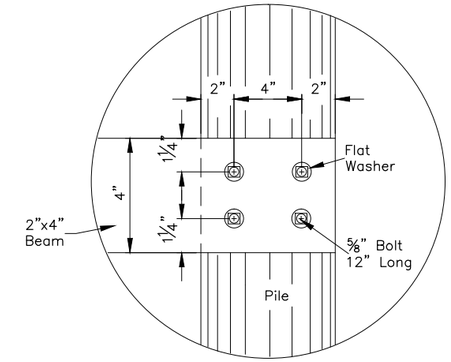

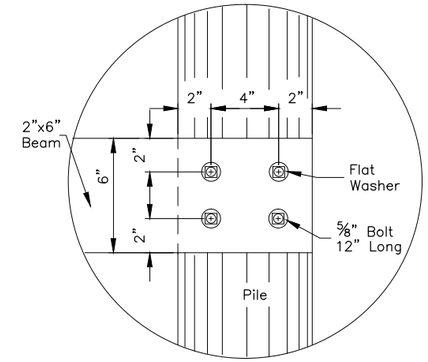

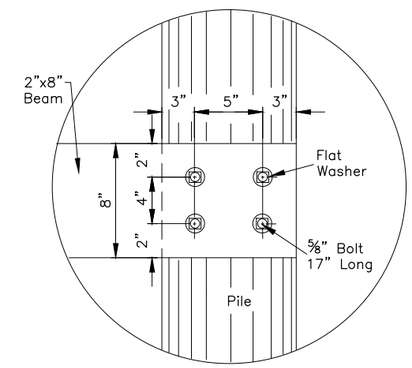

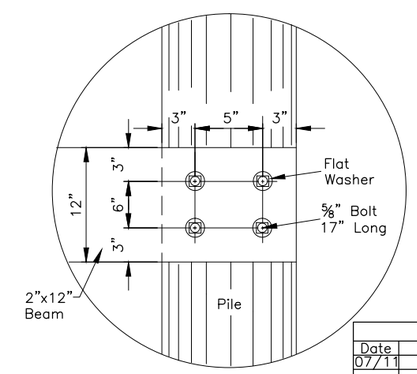

Pipe Outlet Support
Details M, N, and P

Standard DWG. No. FL-410B2

Date 3/16/2011 | Sheet 2 of 2

Revisions		
Date	Approved	Title
07/11	JT Wilson	ST Con Eng

Designed ____ Date ____
Drawn ____
Checked ____
Approved ____

Pipe Outlet Support
Details M, N, and P

NRCS
Natural Resources Conservation Service
United States Department of Agriculture

File No.
FL-410B2.dwg

Drawing No.

3/16/2011

Sheet _ of _