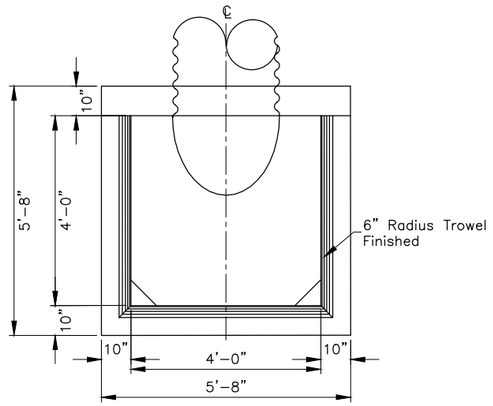

PLAN VIEW
n.t.s.

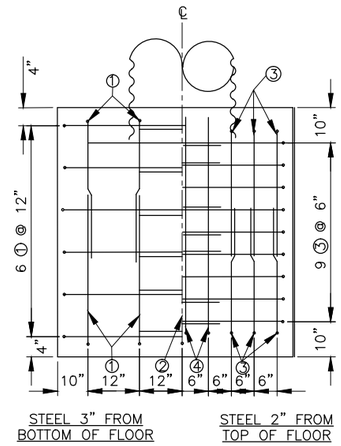

PLAN VIEW FLOOR SLAB
n.t.s.

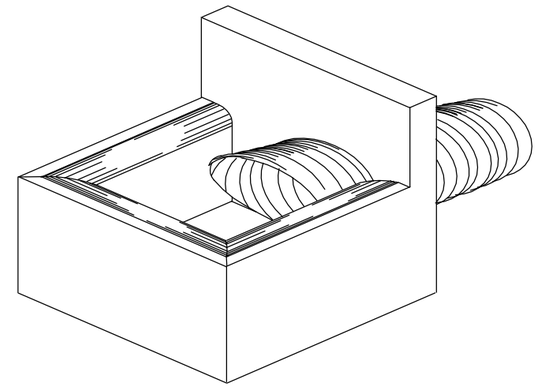

ISOMETRIC
n.t.s.

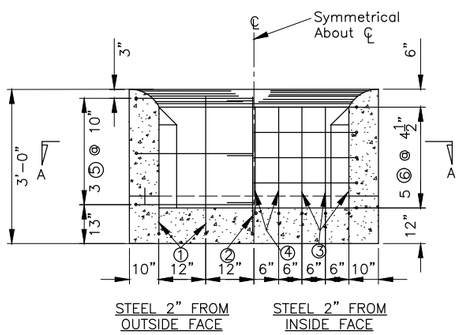

UPSTREAM WALL ELEVATION
n.t.s.

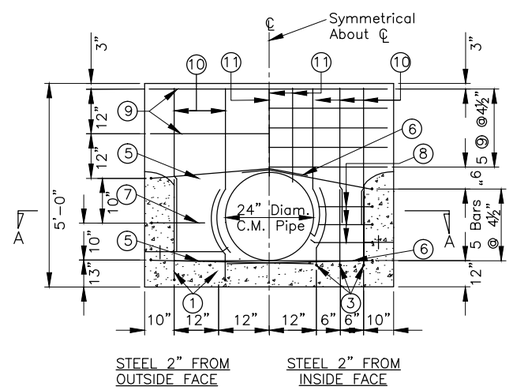

DOWNSTREAM WALL ELEVATION
n.t.s.

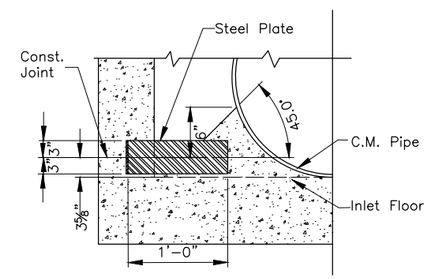

PLATE CONSTRUCTION JOINT DETAIL
n.t.s.

NOTE:
¼"x 6" Carbon Steel Plate Shall Be Continuous Around Inlet Except At C.M. Pipe As Shown.

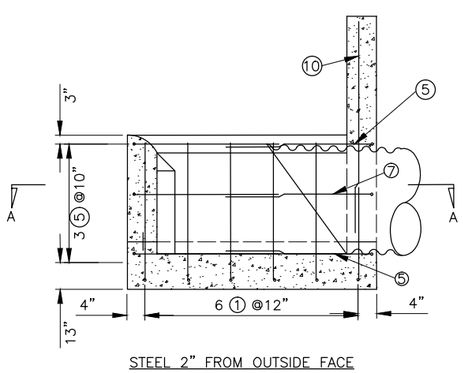

SIDE WALL ELEVATION
n.t.s.

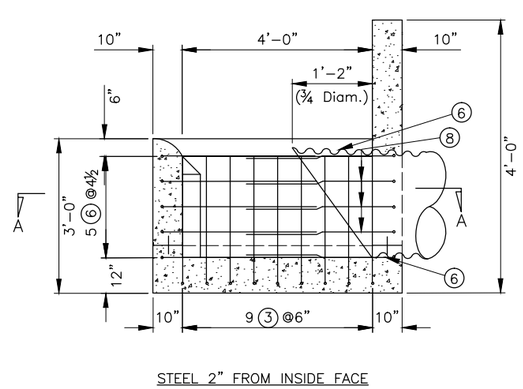

SIDE WALL ELEVATION
n.t.s.

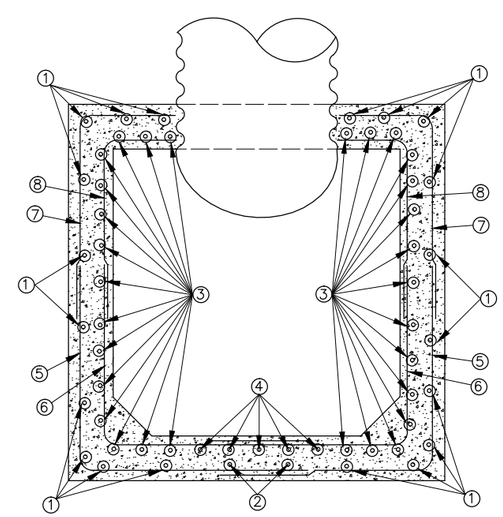

SECTION A–A
n.t.s

STEEL SCHEDULE

FOR TYPICAL BAR TYPES REFER TO A.C.I. STANDARD 315 – 65

LOCATION	MARK	SIZE	QUANTITY	LENGTH	TYPE	B	C	TOTAL FIT
Floor & Walls	1	3	20	6'–0"	17	2'–6"	3'–6"	120'–0"
	2	3	1	7'–9"	17	2"–6"	5'–3"	7''–9"
	3	3	30	4'–9"	17	1'–9"	3'–0"	142'–6"
	4	3	3	6'–6"	17	1'–9"	4'–9"	19'–6"
Walls	5	3	10	7'–0"	17	3"–6"	3'–6"	70'–0"
	6	3	14	6'–0"	17	3'–0"	3'–0"	84'–0"
	7	3	2	5'–0"	17	1'–6"	3'–6"	10'–0"
	8	3	6	4'–0"	17	1'–0"	3'–0"	24'–0"
Downstream Wall	9	3	7	5'–3"	ST.			36'–9"
	10	3	12	3'–6"	ST.			48'–0"
	11	3	4	1'–9"	ST.			7'–0"

QUANTITIES

Reinforcing Steel #3 Bars 563.50 Lin Ft. 811.88 Lbs.
Volume of Concrete 2.7 Cu. Yds.
¼"x6" Carbon Steel Plate 17.00 Lin. Ft.

NOTES AND SPECIFICATIONS

Concrete Box Hooded Inlet
24" Diameter Pipe

Standard DWG. No. FL–410D2.dwg
Date 4/13/2010 | Sheet 2 of 8

Revisions		
Date	Approved	Title
07/11	JT Wilson	ST Con Eng

Date
Designed
Drawn
Checked
Approved

Concrete Box Hooded Inlet
24" Diameter Pipe

NRCS
Natural Resources Conservation Service
United States Department of Agriculture

File No.
FL–410D2.dwg

Drawing No.

4/13/2010
Sheet _ of _