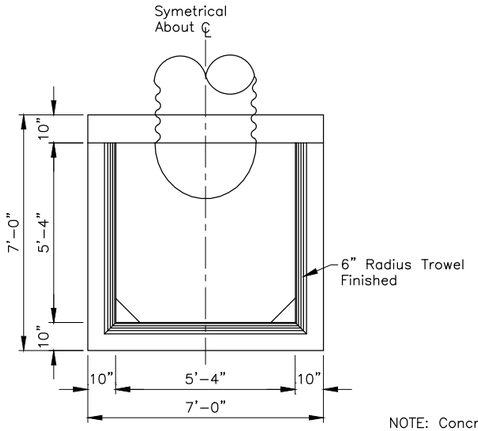

PLAN VIEW
n.t.s.

NOTE: Concrete Floor
Shall be 12" Thick

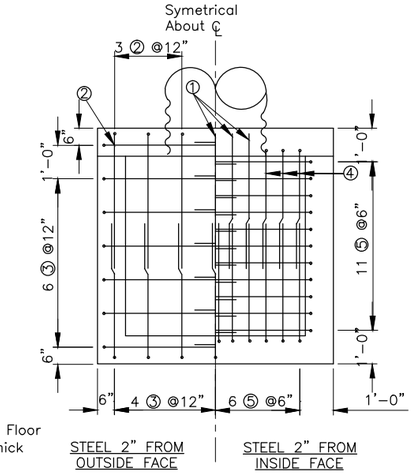

PLAN FLOOR SLAB
n.t.s.

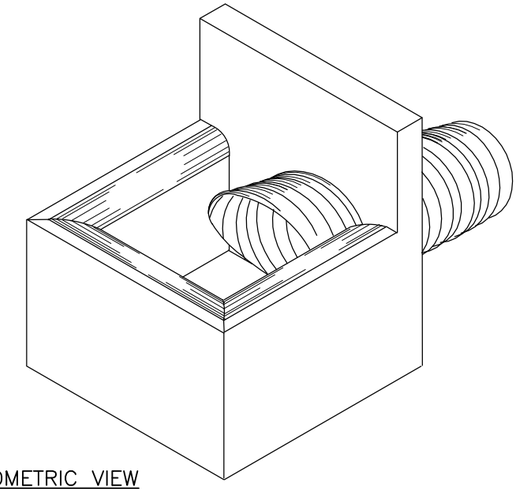

ISOMETRIC VIEW
n.t.s.

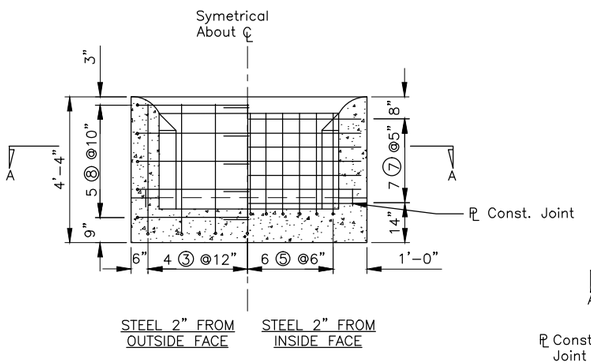

UPSTREAM WALL ELEVATION
n.t.s.

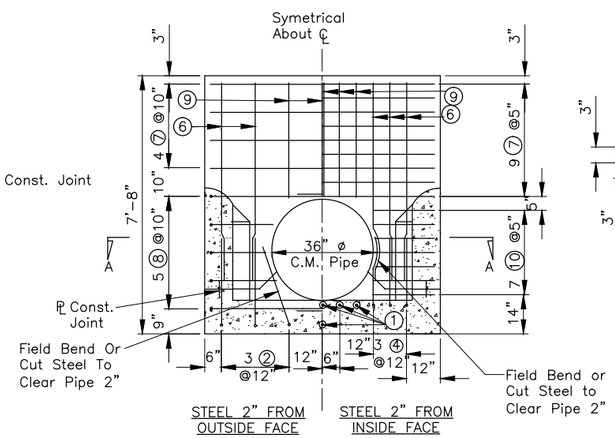

DOWNSTREAM WALL ELEVATION
n.t.s.

NOTE: ¼" x 6" Carbon Steel Plate
Shall Be Continuous Around Inlet
Except At C.M. Pipe As Shown.

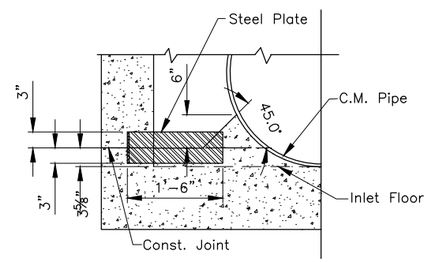

PLATE CONSTRUCTION JOINT DETAIL
n.t.s.

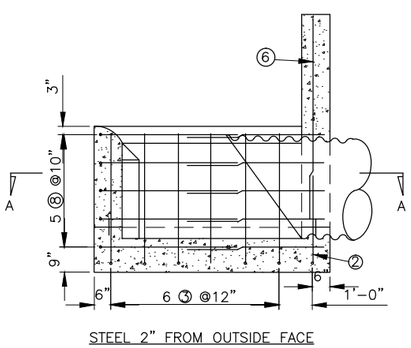

SIDE WALL ELEVATION
n.t.s.

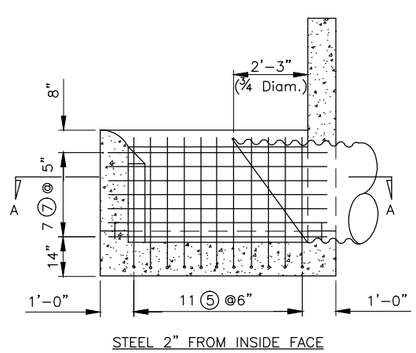

SIDE WALL ELEVATION
n.t.s.

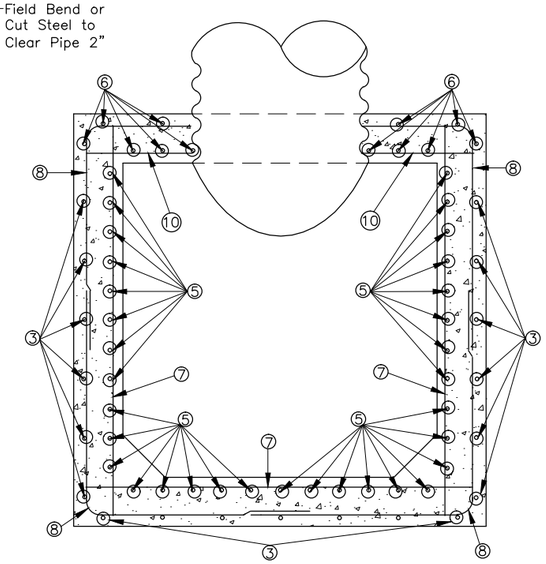

SECTION A–A
n.t.s.

STEEL SCHEDULE

FOR TYPICAL BAR TYPES REFER TO
A.C.I. STANDARD 315 – 65

Location	Mark	Size	Quan.	Length	Type	C	D	Total
Floor Slab	1	3	6	4'–0"	ST.			24'–0"
	2	3	8	6'–6"	17	4'–0"	2'–6"	52'–0"
Floor Slab & Walls	3	3	19	7'–9"	17	4'–0"	3'–9"	147'–3"
	4	3	6	5'–6"	17	3'–6"	2'–0"	33'–0"
	5	3	33	6'–6"	17	3'–6"	3'–0"	214'–6"
Downstream Wall	6	3	12	6'–0"	ST.			72'–0"
Walls	7	3	34	6'–6"	ST.			221'–0"
	8	3	20	8'–0"	17	4'–0"	4'–0"	160'–0"
	9	3	8	3'–3"	ST.			26'–0"
	10	3	14	1'–9"	ST.			24'–6"

QUANTITIES

Reinforcing Steel #3 Bars 974.25 Lin. Ft. 366.32 Lbs.
Volume Of Concrete 4.9 Cu. Yds.
¼"x6" Carbon Steel Plate 21.50 Lin. Ft.

NOTES AND SPECIFICATIONS

Date
Designed
Drawn
Checked
Approved

Concrete Box Hooded Inlet
36" Diameter Pipe

NRCS
Natural Resources Conservation Service
United States Department of Agriculture

File No.
FL–410D4.dwg

Drawing No.

4/13/2010

Sheet _ of _

Revisions		
Date	Approved	Title
07/11	JT Wilson	ST Con Eng

Concrete Box Hooded Inlet
36" Diameter Pipe

Standard DWG. No. FL–410D4.dwg

Date 4/13/2010 | Sheet _ of _