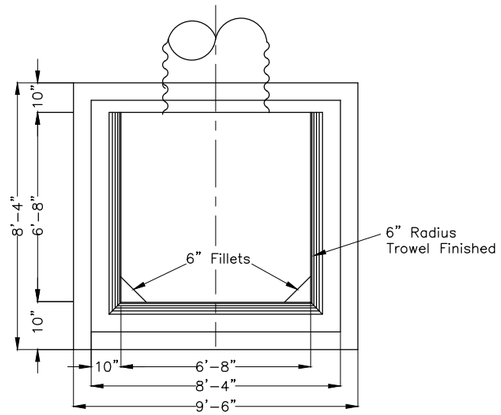

PLAN
n.t.s.

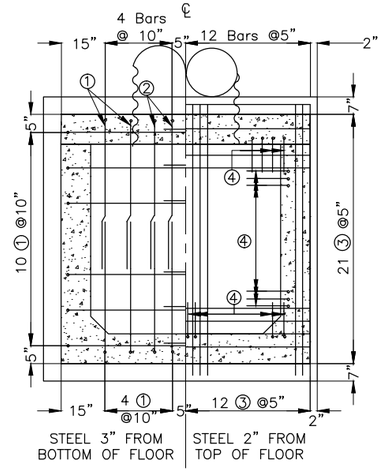

PLAN FLOOR SLAB
n.t.s.

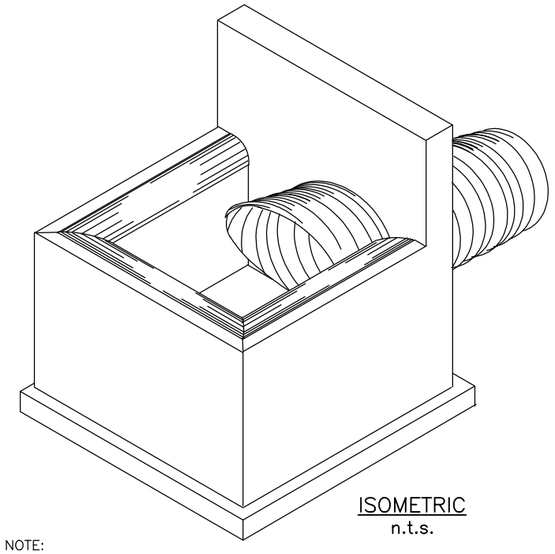

ISOMETRIC
n.t.s.

NOTE:
¼"x6" Carbon Steel Plate Shall
Be Continuous Around Inlet
Except At C.M. Pipe As Shown.

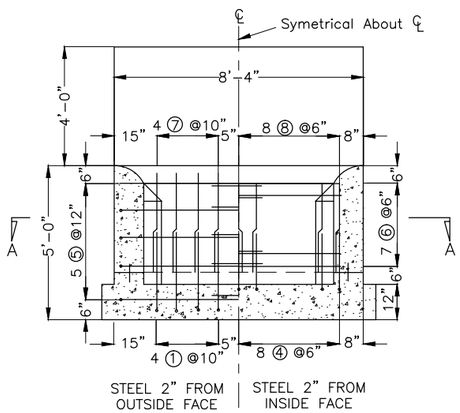

UPSTREAM WALL ELEVATION
n.t.s.

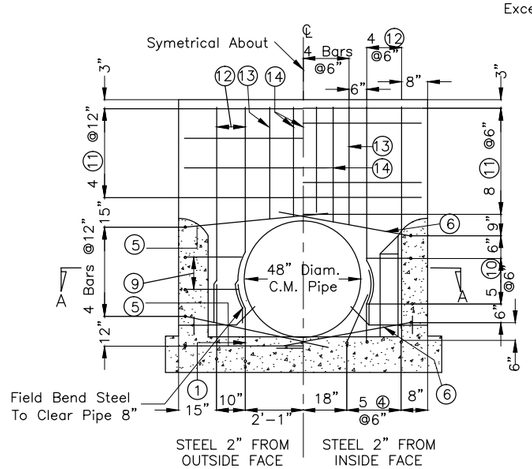

DOWNSTREAM WALL ELEVATION
n.t.s.

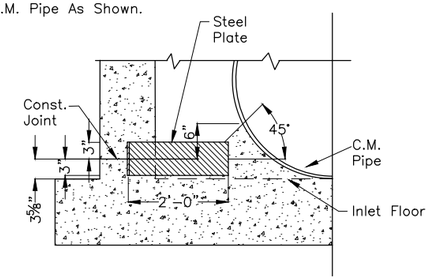

PLATE CONSTRUCTION
JOINT DETAIL
n.t.s.

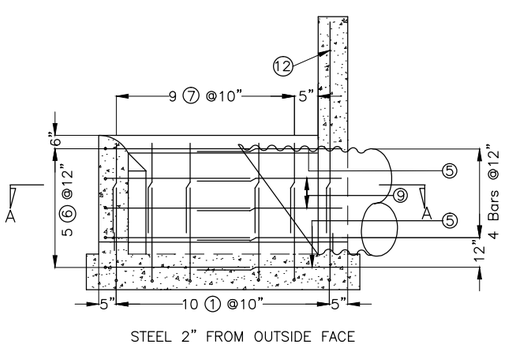

SIDE WALL ELEVATION
n.t.s.

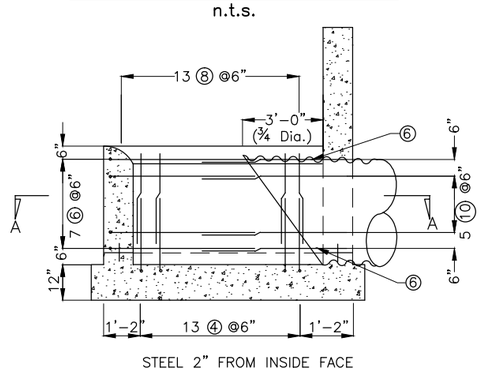

SIDE WALL ELEVATION
n.t.s.

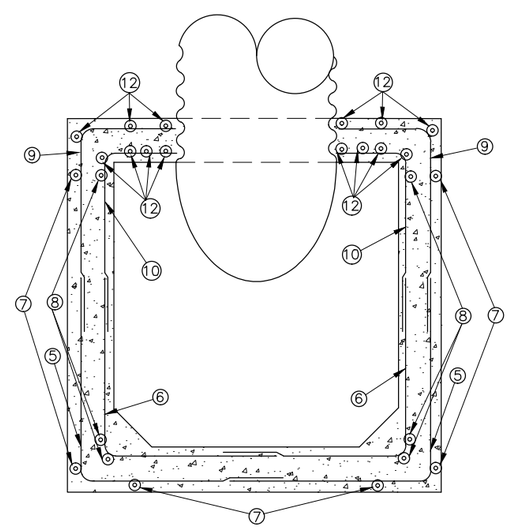

SECTION A–A
n.t.s.

STEEL SCHEDULE

FOR TYPICAL BAR TYPES REFER TO A.C.I.
STANDARD 315–65

LOCATION	MARK	SIZE	QUANTITY	LENGTH	TYPE	C	D	TOTAL FT.
Floor Slab	1	3	32	7'–3"	17	4'–9"	2'–6"	232'–0"
	2	3	4	4'–9"	ST.			19'–0"
	3	3	44	9'–0"	ST.			396'–0"
Floor Slab–Upstrm, Dwnstrm, Sidewalls	4	3	51	3'–3"	17	2'–0"	1'–3"	165'–9"
Sidewalls & Upstrm Walls	5	3	16	9'–6"	17	4'–9"	4'–9"	152'–0"
	6	3	18	9'–0"	17	4'–6"	4'–6"	162'–0"
	7	3	26	3'–6"	ST.			91'–0"
	8	3	41	3'–3"	ST.			133'–3"
Dwnstrm & Sidewalls	9	3	4	6'–6"	17	4'–9"	1'–9"	26'–0"
	10	3	10	6'–0"	17	4'–6"	1'–6"	60'–0"
	11	3	12	8"–0"	ST.			96'–0"
	12	3	14	7'–6"	ST.			105'–0"
	13	3	4	4'–0"	ST.			16'–0"
	14	3	8	3'–9"	ST.			30'–0"

QUANTITIES

#3 Bars 1,684.00 LIN. Ft. 663.18 Lbs.
Class 3,000 Concrete 7.8 Cu. Yds.
¼"x6" Carbon Steel Plate 26'–6"
Long for One Construction Joint.

NOTES AND SPECIFICATIONS

Concrete Box Hooded Inlet
48" Diameter Pipe

Standard DWG. No. FL–410D6(Rev).dwg
Date 5/3/2010 | Sheet 6 of 8

Revisions		
Date	Approved	Title
07/11	JT Wilson	ST Con Eng

Date
Designed
Drawn
Checked
Approved

Concrete Box Hooded Inlet
48" Diameter Pipe

NRCS
Natural Resources Conservation Service
United States Department of Agriculture

File No.
FL–410D6(Rev).dwg
Drawing No.
5/3/2010
Sheet _ of _