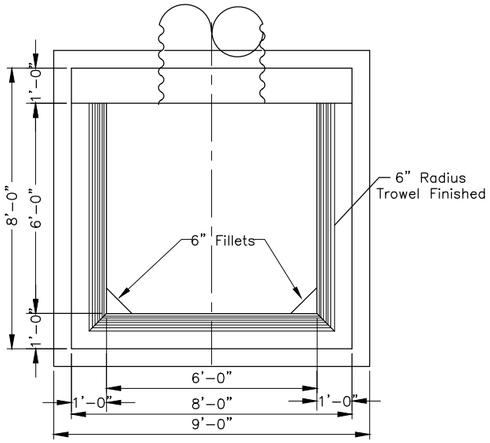

PLAN
n.t.s.

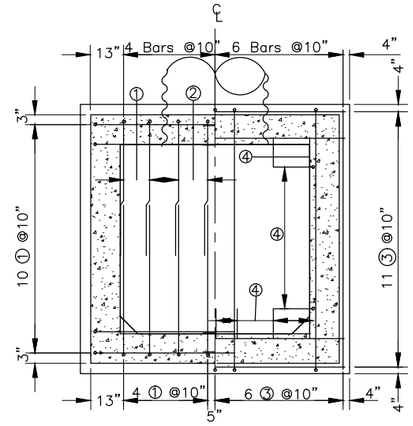

PLAN FLOOR SLAB
n.t.s.

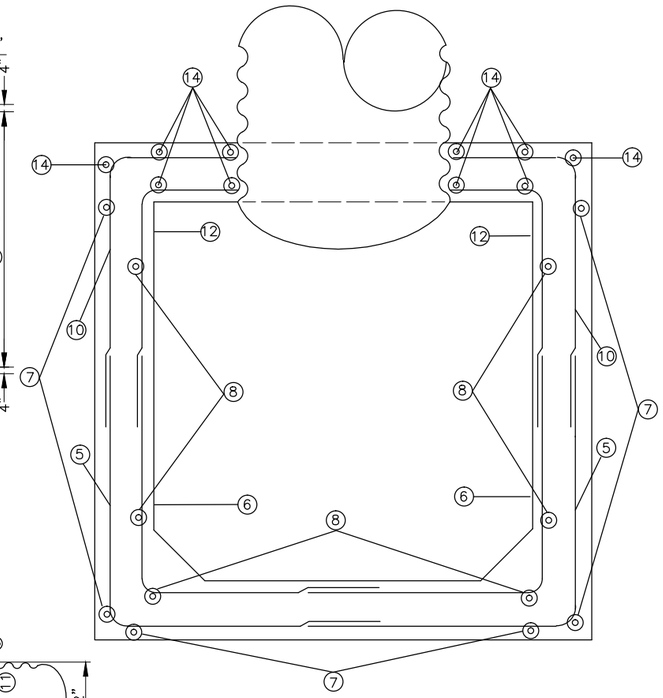

SECTION A–A
n.t.s.

STEEL SCHEDULE

FOR TYPICAL BAR TYPES REFER TO A.C.I.
STANDARD 315–65

LOCATION	MARK	SIZE	QUANTITY	LENGTH	TYPE	C	D	TOTAL FT.
Floor Slab–Upstrm, Dwnstrm, Sidewalls	1	4	32	7'–0"	17	4'–6"	2'–6"	224'–0"
	2	4	4	4'–6"	ST.			18'–0"
	3	4	22	8'–6"	ST.			187'–0"
	4	4	21	3'–3"	17	2'–0"	1'–3"	68'–3"
Sidewalls & Upstrm Walls	5	4	18	9'–0"	17	4'–6"	4'–6"	168'–0"
	6	4	18	8'–0"	17	4'–0"	4'–0"	144'–0"
	7	4	26	5'–0"	ST.			130'–0"
	8	4	17	4'–9"	ST.			80'–9"
Sidewalls & Dwnstrm Walls	9	4	4	6'–6"	17	4'–6"	1'–9"	26'–0"
	10	4	2	6'–3"	17	4'–6"	1'–6"	12'–6"
	11	4	4	5'–3"	17	4'–0"	1'–3"	21'–0"
	12	4	2	5'–0"	17	4'–0"	1'–0"	10'–0"
Sidewalls & Dwnstrm Walls	13	4	4	7'–6"	ST.			30'–0"
	14	4	10	7'–0"	ST.			70'–0"
	15	4	4	3'–3"	ST.			13'–0"
	16	4	3	3'–0"	ST.			9'–0"

QUANTITIES

#4 Bars 1,205.50 LIN. Ft. 805.3 Lbs.
Class 4,000 Concrete 8.9 Cu. Yds.
¼" Carbon Steel Plate 25'–0" Long for One Construction Joint.

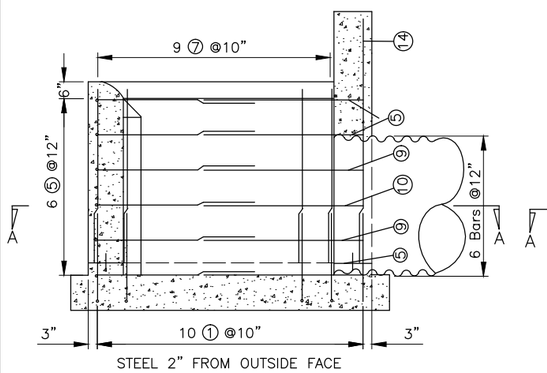

SIDE WALL ELEVATION
n.t.s.

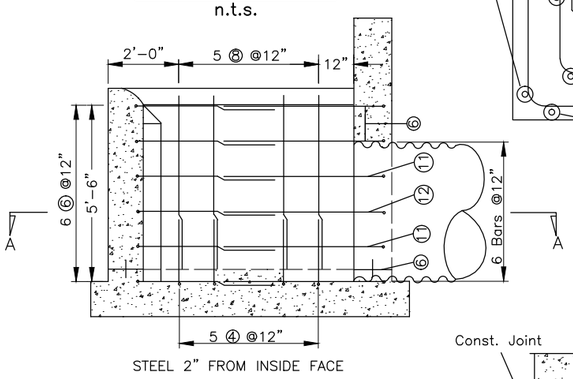

SIDE WALL ELEVATION
n.t.s.

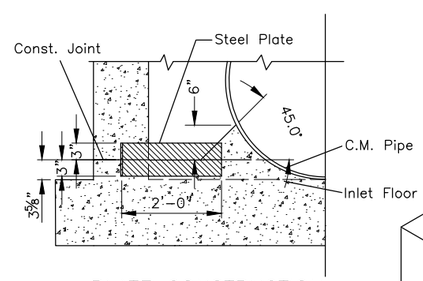

PLATE CONSTRUCTION
JOINT DETAIL
n.t.s.

NOTE:
¼"x 6" Carbon Steel Plate Shall Be Continuous Around Inlet Except At C.M. Pipe As Shown.

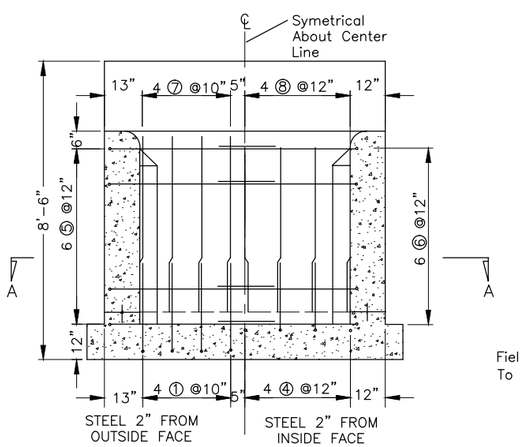

UPSTREAM WALL ELEVATION
n.t.s.

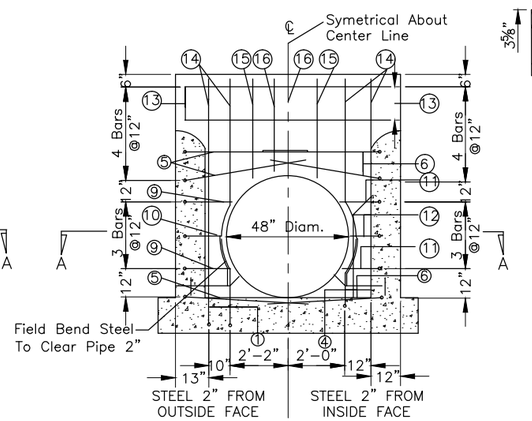

DOWNSTREAM WALL ELEVATION
n.t.s.

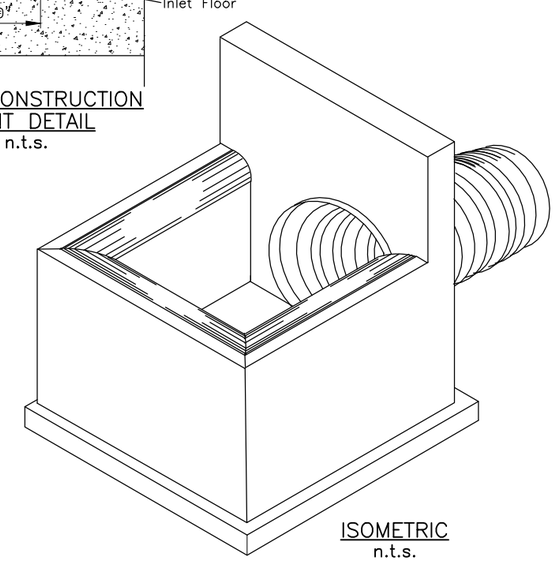

ISOMETRIC
n.t.s.

NOTES AND SPECIFICATIONS

Concrete Box Inlet
48" Diameter Pipe

Standard DWG. No. FL–410D7.dwg
Date 6/9/2011 | Sheet 7 of 8

Revisions		
Date	Approved	Title
07/11	JT Wilson	ST Con Eng

Date
Designed
Drawn
Checked
Approved

Concrete Box Inlet
48" Diameter Pipe

NRCS
Natural Resources Conservation Service
United States Department of Agriculture

File No.
FL–410D7.dwg
Drawing No.
6/9/2011
Sheet _ of _