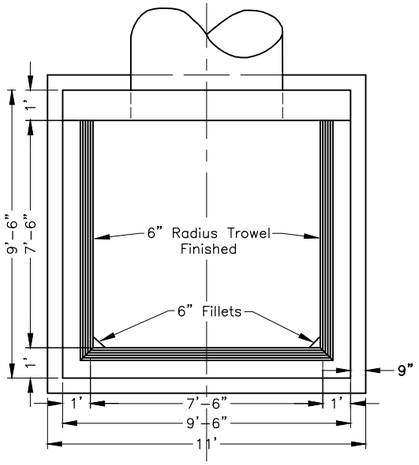

PLAN
n.t.s.

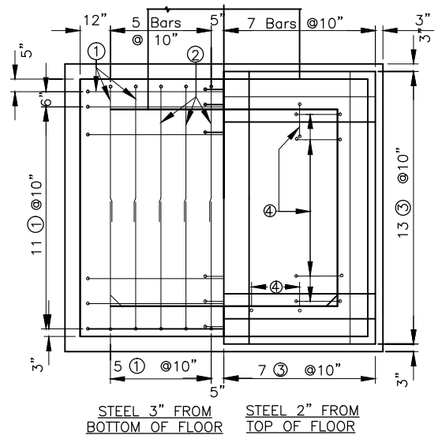

PLAN–FLOOR SLAB
n.t.s.

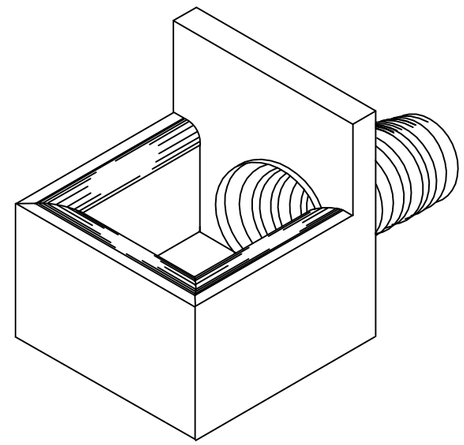

ISOMETRIC VIEW
n.t.s.

LOCATION	MARK	SIZE	QUAN.	LENGTH	TYPE	C	D	TOTAL FT.
Floor Slab–Upstream, Downstream, Sidewalls	1	4	38	7'–9"	ST.	5'–3"	2'–6"	294'–6"
	2	4	6	5'–3"	ST.			31'–6"
	3	4	26	10'–0"	ST.			260'–0"
	4	4	25	3'–3"	ST.	2'–0"	1'–3"	81'–3"
Sidewalls and Upstream Walls	5	4	20	10'–6"	ST.	5'–3"	5'–3"	210'–0"
	6	4	20	9'–6"	ST.	4'–9"	4'–9"	190'–0"
Sidewalls	7	4	32	6'–0"	ST.			192'–0"
	8	4	23	5'–9"	ST.			132'–3"
Sidewalls and Downstream Walls	9	4	4	7'–6"	ST.	5'–3"	2'–3"	30'–0"
	10	4	4	7'–0"	ST.	5'–3"	1'–9"	28'–0"
	11	4	4	6'–6"	ST.	4'–9"	1'–9"	26'–0"
	12	4	4	6'–0"	ST.	4'–9"	1'–3"	24'–0"
Downstream Wall	13	4	4	9'–0"	ST.			36'–0"
	14	4	8	8'–0"	ST.			64'–0"
	15	4	4	4'–0"	ST.			16'–0"
	16	4	4	3'–3"	ST.			13'–0"
	17	4	3	3'–0"	ST.			9'–0"

QUANTITIES

#4 Bars 1,637.50 Lin. ft. 1,093.9 Lbs.
Class 4,000 Concrete 12.5 Cu. Yds.
¼"x6" Carbon Steel Plate 30'–6" Long for Once Construction Joint.

NOTES AND SPECIFICATIONS

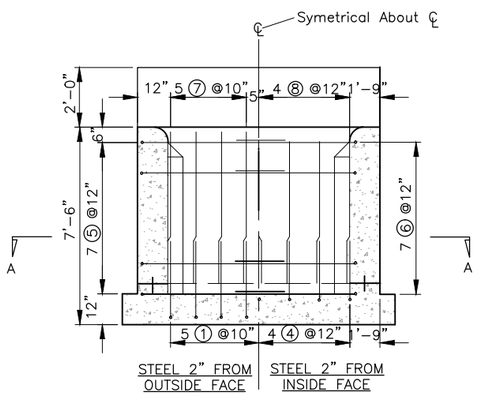

UPSTREAM WALL ELEVATION
n.t.s.

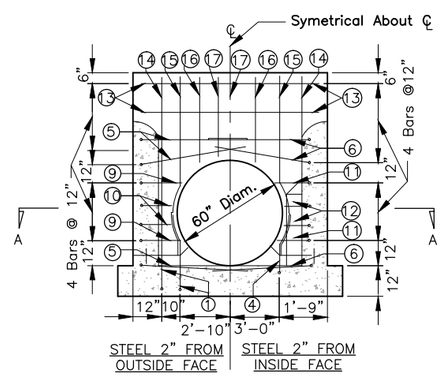

DOWNSTREAM WALL ELEVATION
n.t.s.

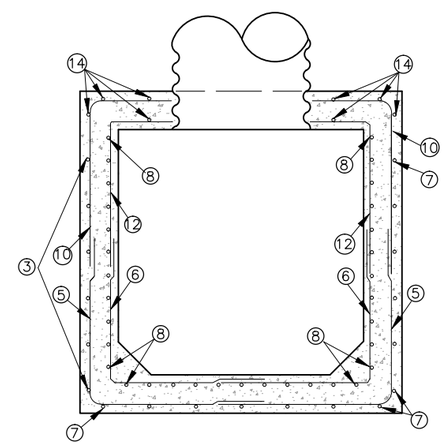

SECTION A–A
n.t.s.

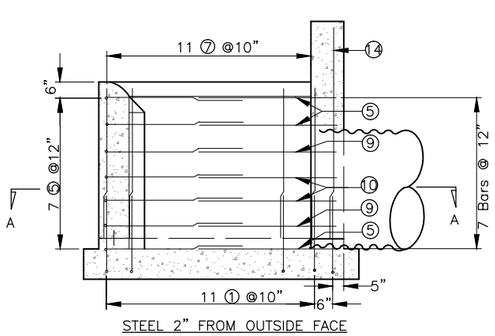

SIDE WALL ELEVATION
n.t.s.

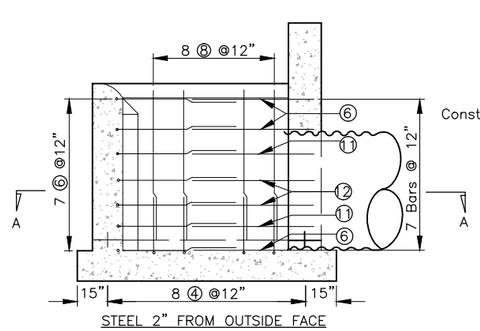

SIDE WALL ELEVATION
n.t.s.

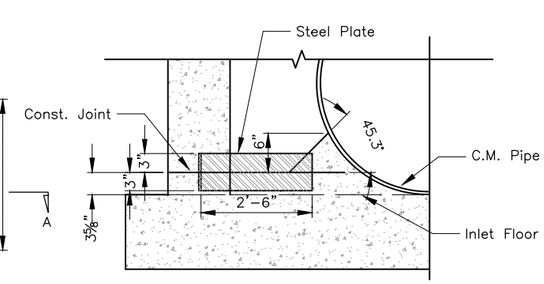

PLATE CONSTRUCTION JOINT DETAIL
n.t.s.

Concrete Box Inlet
60" Diameter Pipe

Standard DWG. No. FL–410D8.dwg

Date 2/22/2011 | Sheet 8 of 8

Revisions		
Date	Approved	Title
07/11	JT Wilson	ST Con Eng

Date
Designed
Drawn
Checked
Approved

Concrete Box Inlet
60" Diameter Pipe

NRCS
Natural Resources Conservation Service
United States Department of Agriculture

File No.
FL–410D8.dwg

Drawing No.

2/22/2011

Sheet _ of _