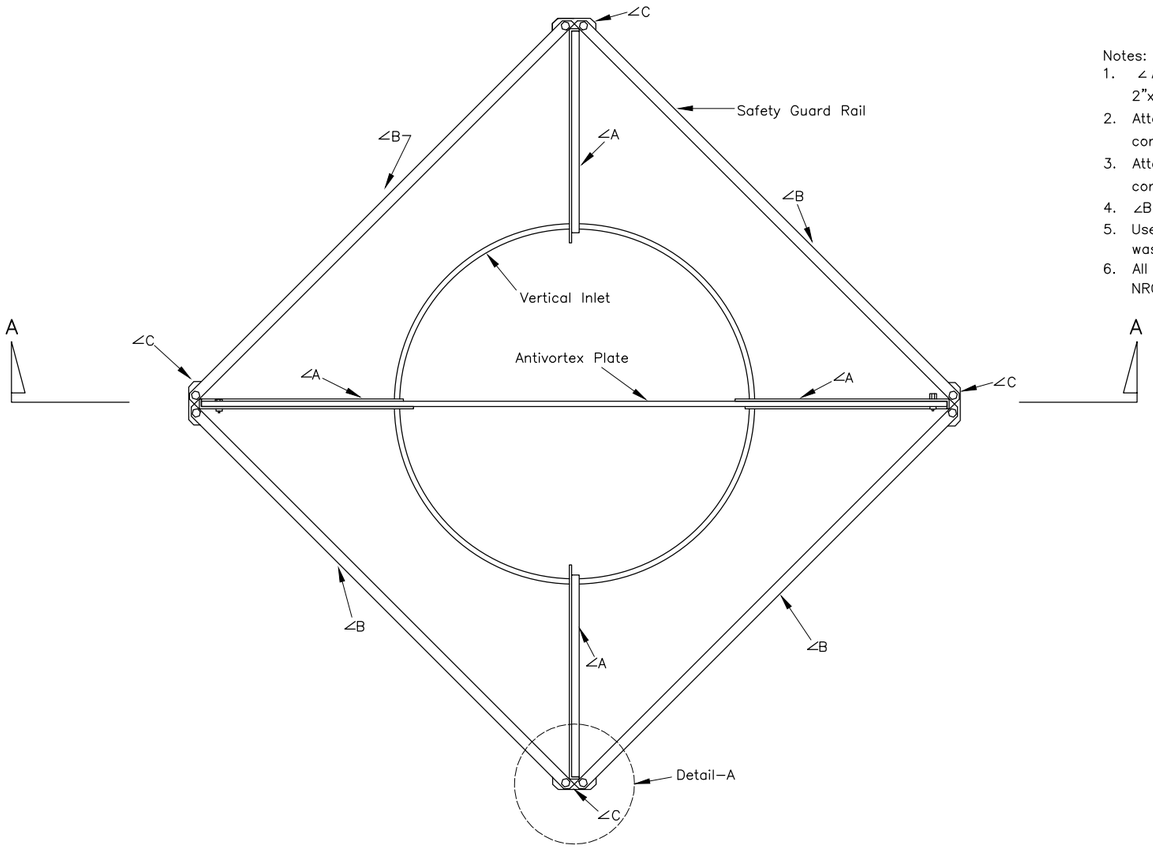

PLAN VIEW
n.t.s.

Notes:

1. ∠A's, ∠B's and ∠C's to be fabricated of 2"x2"x5/16" structural steel angle cut for inlet diameters 18" thru 90", and of 2"x2"x1/4" for smaller inlets. Punch and weld to dimensions and shapes shown.
2. Attach ∠A's to vertical inlet with a minimum of three(3), ½"x1½" machine bolts in each angle, spaces in alternate corrugations. Drill 9/16" holes in the inlet and in∠A's for the ½" bolts. (12 min. required for each vertical inlet)
3. Attach antivortex plate to ∠A's with a minimum of seven(7) ½"x½" machine bolts in each angle spaced in alternate corrugations. Drill 9/16" holes in anti–vortex plate and in ∠A's for the ½" bolts. (14 required for each vertical inlet)
4. ∠B's shall be attached to ∠A's by bolting as shown on the drawings. 4 ∠A's; 8 ∠B's; and 8 ∠C's are required.
5. Use a flat washer under the head of each bolt and a flat washer and lock washer under each nut. All nuts, bolts, and washers shall be galvanized.
6. All angles of the guard assembly shall be galvanized after all punching, cutting, welding and burning has been completed. See NRCS material specification 582.

SCHEDULE OF SIZES				
Inlet Dia.	∠A Length	∠B Length	L	Antivortex Plate Length
24"	6'–6½"	4'–2"	2'–½"	5'–8"
30"	6–3½"	4'–2"	1'–9½"	5'–8"
36"	6'–½"	4'–2"	1'–6½"	5'–8"
42"	6'–11"	5'–9"	2'–5"	7'–10½"
48"	6'–8"	5'–9"	2'–2"	7'–10½"
54"	6'–5"	5'–9"	1'–11"	7'–10½"
60"	7'–1½"	7'–1"	2"–7½"	9–7½"
66"	6'–10½"	7'–1"	2'–4½"	9–7½"
72"	6'–7½"	7'–1"	2'–1½"	9–7½"
78"	7'–4½"	8'–6"	2'–10½"	11'–9"
84"	7'–1½"	8'–6"	2'–7½"	11'–9"
90"	6'–10½"	8'–6"	2'–4½"	11'–9"

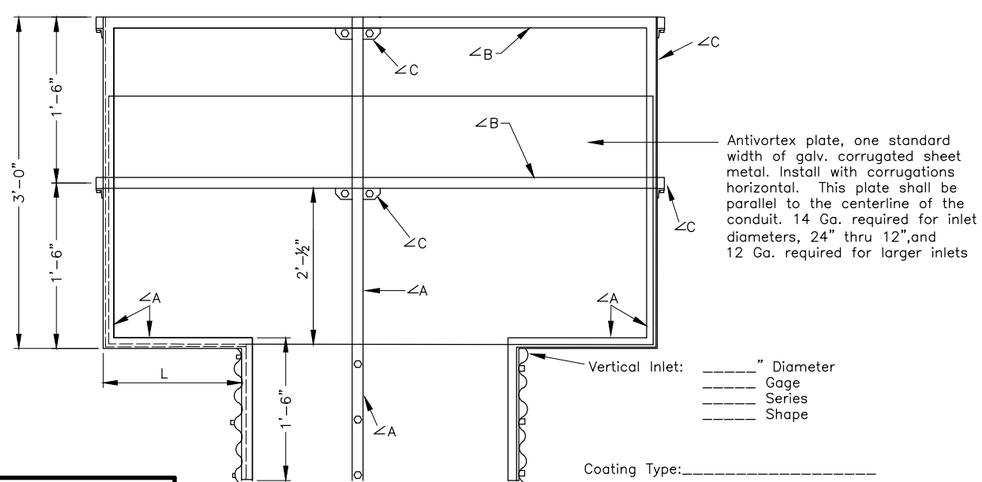

Section A–A
n.t.s.

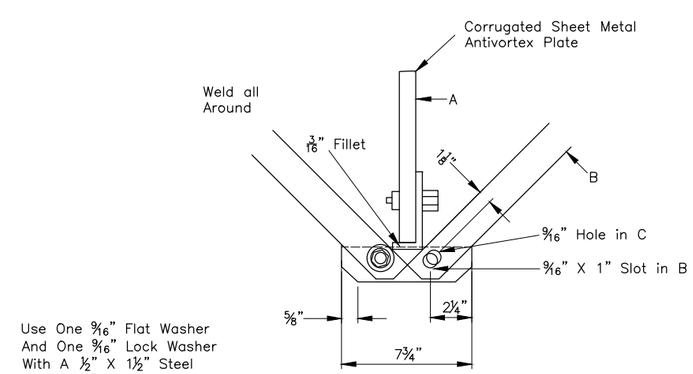

DETAIL–A
n.t.s.

Corrugated Metal Vertical Inlet Guard Rails With Antivortex Plate

Standard DWG. No. FL–410F1.dwg

Date 6/7/2011 | Sheet 1 of 1

Revisions		
Date	Approved	Title
07/11	JT Wilson	ST Con Eng

Date

Designed

Drawn

Checked

Approved

Corrugated Metal Vertical Inlet Guard Rails With Antivortex Plate

NRCS
Natural Resources Conservation Service
United States Department of Agriculture

File No. FL–410F1.dwg

Drawing No.

6/7/2011

Sheet of