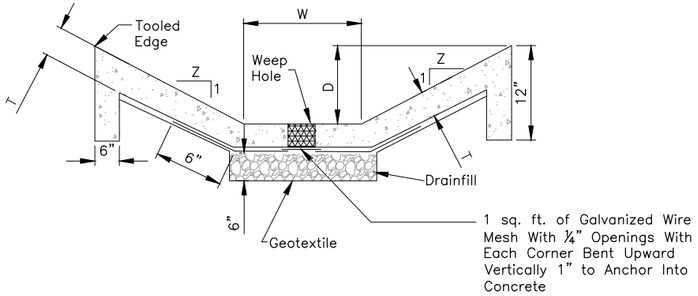

TYPICAL SECTION CONCRETE LINED WATERWAY W/SIDEWALL CUTOFFS (SIDEWALL WEEPHOLES NOT SHOWN)
n.t.s.

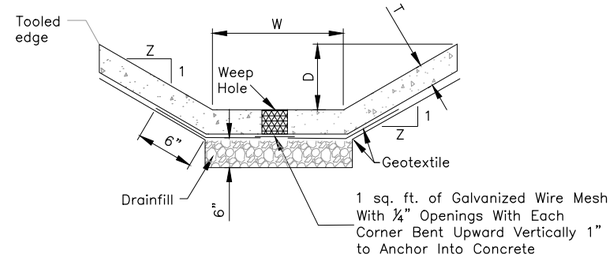

TYPICAL SECTION CONCRETE LINED WATERWAYS NOT REQUIRING CUTOFFS ALONG SIDE WALLS
n.t.s.

Note: Weep Hole Shall be 3"x4" Rectangle or 5" dia. Circle

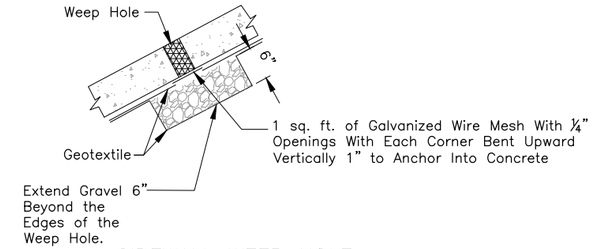

SIDEWALL WEEP HOLE DETAIL
n.t.s.

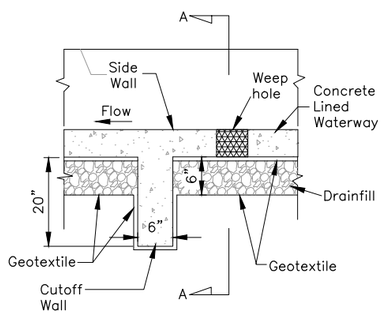

CUTOFF WALL DETAIL
n.t.s.

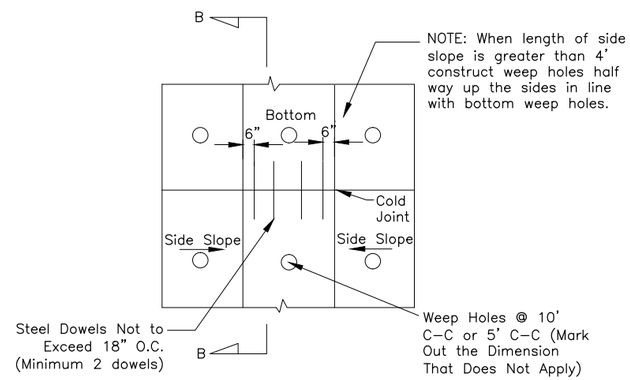

TYPICAL PLAN VIEW
n.t.s.

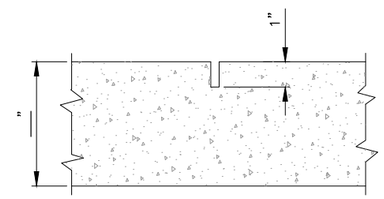

CONTRACTION JOINT DETAIL
n.t.s.

Contraction Joints are to be Spaced at 20' Intervals and may be Either Formed or Tooled.
Cut Off Walls Shall be Constructed at Locations Shown on the Drawings.

CONCRETE LINED DIMENSIONS					
FROM STATION	TO STATION	THICKNESS, IN (T)	BOTTOM WIDTH, FT (W)	SIDE SLOPE (Z)	DEPTH, FT (D)

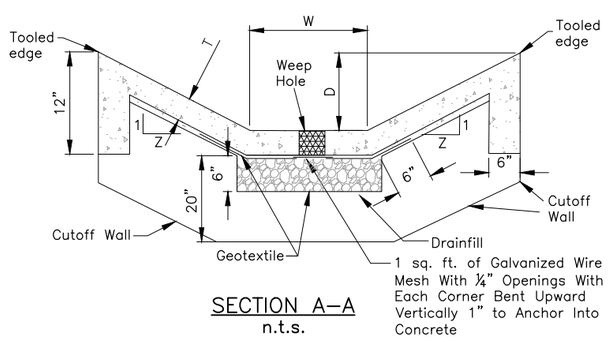

SECTION A–A
n.t.s.

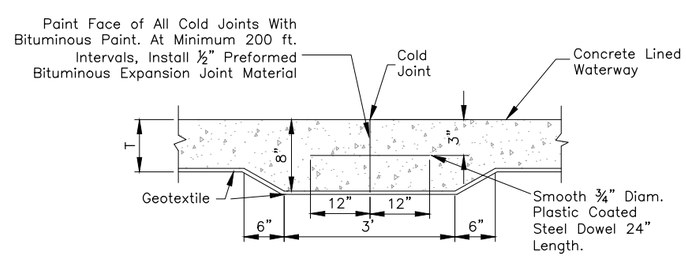

SECTION B–B
CONSTRUCTION DETAILS REQUIRED AT ALL COLD JOINTS
n.t.s.

NOTE:
No. of Rows of Weepholes

1. When "Bottom Width" = 1' to 4' Construct 1 Row Along Centerline of Waterway
2. When "Bottom Width" = 5' to 7' Construct 2 Rows w/ Outside Rows 1' From Bottom Toe
3. When "Bottom Width" = 8' to 12' Construct 3 Rows w/ Outside Rows 1' From Bottom Toe and Third Row at Centerline of Waterway

Concrete Lined Waterway

Standard DWG. No. FL–468.dwg
Date 4/12/2010 | Sheet 1 of 1

Revisions		
Date	Approved	Title
07/11	JT Wilson	ST Con Eng

Date
Designed
Drawn
Checked
Approved

Concrete Lined Waterway

NRCS
Natural Resources Conservation Service
United States Department of Agriculture

File No. FL–468.dwg
Drawing No.
7/26/2011
Sheet of