ALASKA STANDARD DESIGN	FENCE CATTLE, HORSES, SHEEP, GOATS PERIMETER OR CROSS FENCE 5 WIRE ELECTRIC FENCE	AK382 – 012 APPROVED BY: CS ISSUE DATE: 03/2007

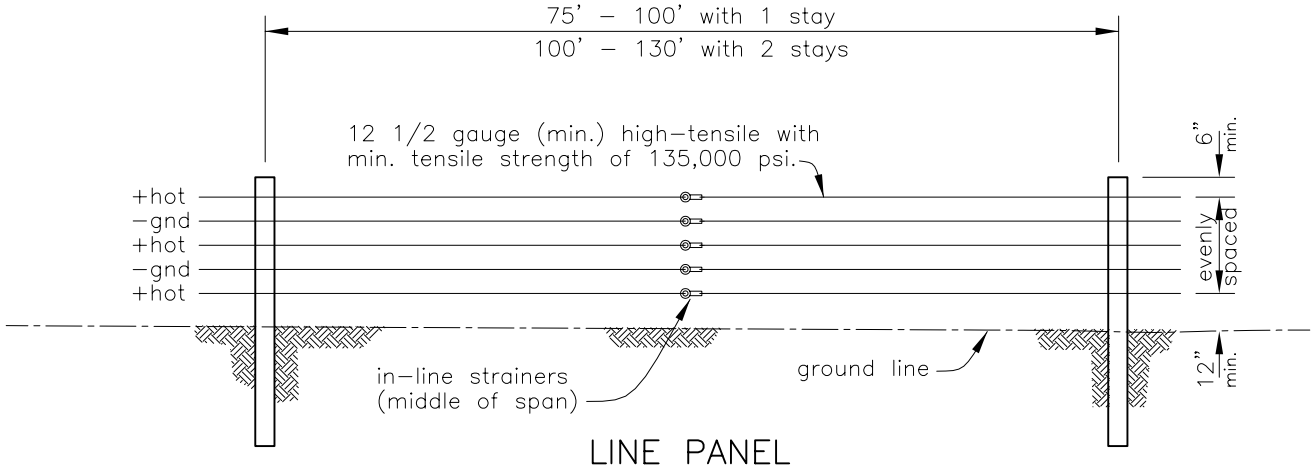

LINE PANEL

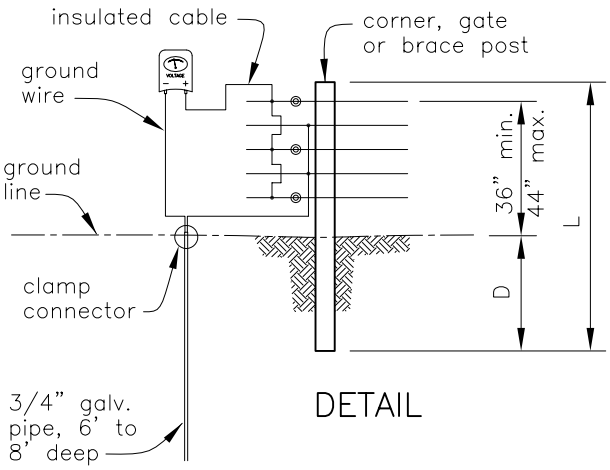

DETAIL

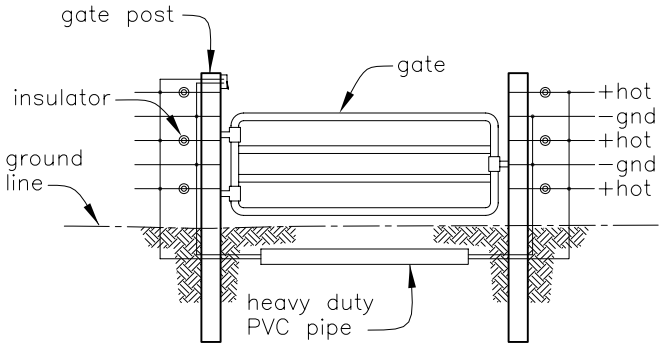

ROAD CROSSING DETAIL

LINE POSTS:	Fiberglass ("T"–shaped, 1–1/4"x1–1/4" min.) Wood insultimber (1 in. square) Steel (> 1.01 lb/ft) Wood (3 in. dia. min.)	L = 6 ft. min. D = 18 in. min.
CORNER, GATE, BRACE POSTS:	Fiberglass ("T"–shaped, 1–1/4"x1–1/4" min.) Wood insultimber (2"x1–1/2") Steel (> 1.25 lb/ft) Wood (6 in. dia. min.)	L = 7 ft. min. D = 3 ft. min.
ENERGIZERS:	110–volt or 220–volt line–powered 12–volt battery solar–powered	STAYS: Wood Fiberglass
FASTENERS:	Porcelain insulators Plastic insulators	

GALVANIZING shall be at least Class III as per ASTM A–121.

NOTE:
Cattle and Horses – minimum height 44 inches
Sheep and Goats – minimum height 39 inches
Stay spacing for sheep is 25 feet

Drawing not to scale. Standardized drawing must be adapted to the specific site.

NRCS
Natural Resources Conservation Service
United States Department of Agriculture

	Date	File Name AK382–012.dwg
Designed		
Drawn B DALLAS	3/07	Drawing Name
Checked		3/9/2007 10:05AM
Approved		Sheet of