ALASKA STANDARD DESIGN	FENCE CHAIN LINK FENCE GATES	AK382 – 014 APPROVED BY: CS ISSUE DATE: 03/2007

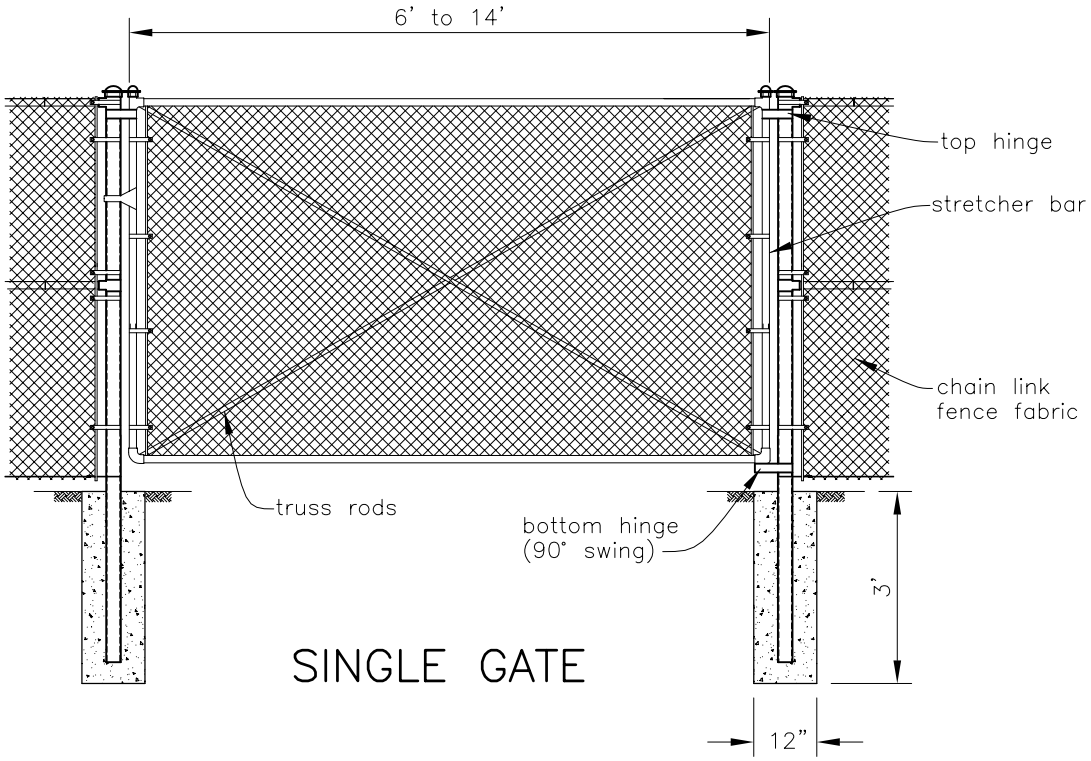

SINGLE GATE

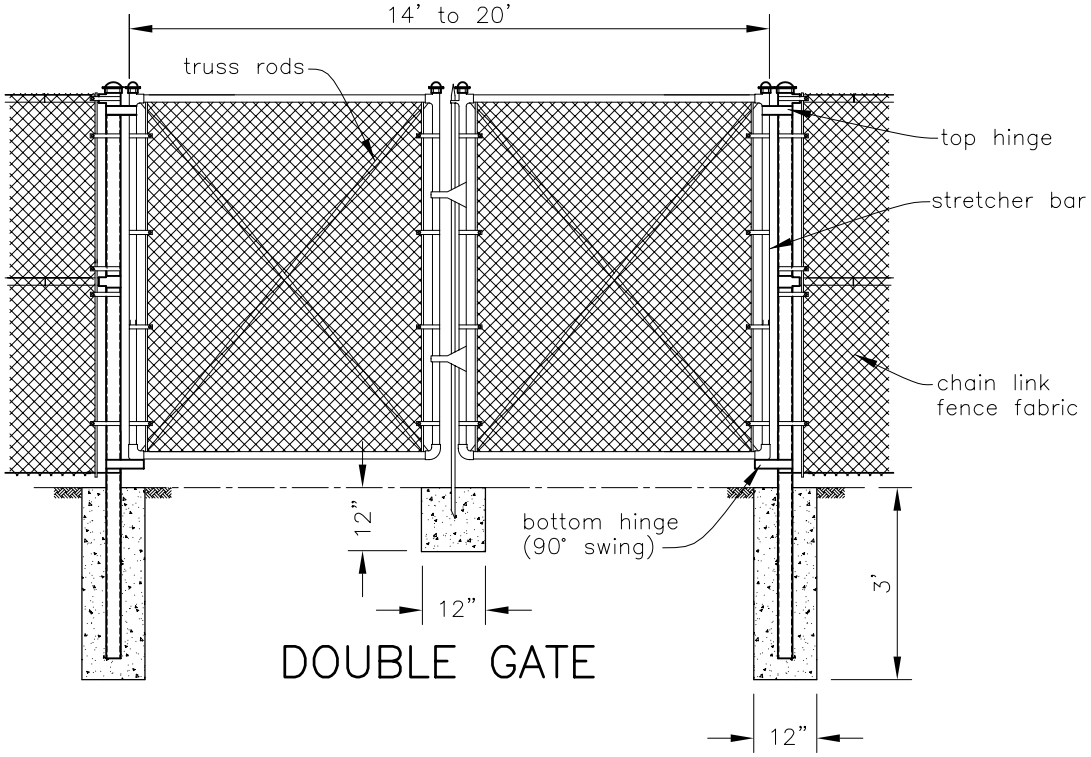

DOUBLE GATE

Drawing not to scale. Standardized drawing must be adapted to the specific site.

NRCS Natural Resources Conservation Service United States Department of Agriculture		Date	File Name AK382–014.dwg
	Designed		Drawing Name
	Drawn	B DALLAS 3/07	
	Checked		3/9/2007 10:17AM
	Approved		Sheet of