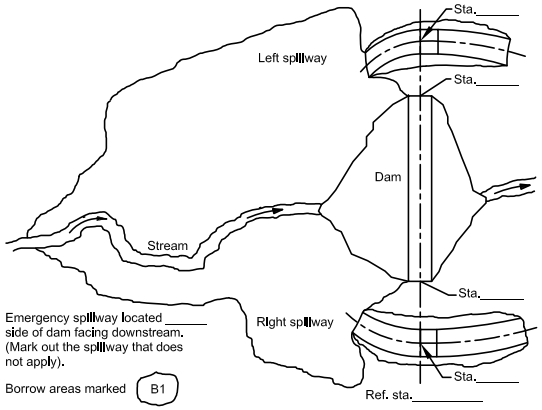

GENERAL INFORMATION

Uses for impounded water _____ Pond Class _____

Area at normal pool _____ acres Maximum depth = _____ ft.

Capacity = 0.40 x _____ acres x _____ feet = _____ Acre feet

Source of water _____ Drainage area _____ acres

EARTH QUANTITIES

Embankment	_____ cu. yds.
Excavation of cutoff trench	_____ cu. yds.
Excavation of outlet channel	_____ cu. yds.
Other excavation	_____ cu. yds.
Total	_____ cu. yds.

BILL OF MATERIALS

_____ ft. of _____ in. dia. _____ pipe (riser)

_____ ft. of _____ in. dia. _____ pipe (barrel)

_____ _____ x _____ ft. trash rack or sleeve.
Hooks spaced _____ ft. from top of sleeve.

_____ _____ in. x _____ in. x _____ in. tee or cross.

_____ _____ in.dia. _____ valve or _____ in. dia. headgate.
Frame height = _____ ft.

_____ _____ cu. yds. concrete _____ ft. x _____ ft. x _____ ft.

_____ _____ in. x _____ ft. treated poles.

_____ cu. yds. ASTM C-33 sand

_____ cu. yds. no. 8 or 89 stone

_____ tons riprap, Class _____

_____ sq. yds. non-woven geotextile, 8 oz.

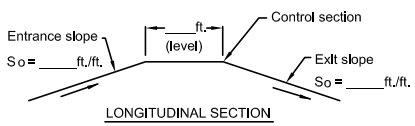

LONGITUDINAL SECTION

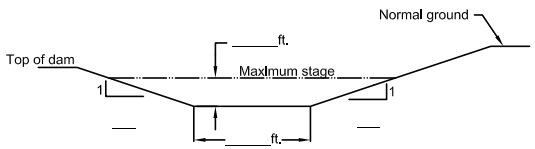

CROSS SECTION

EMERGENCY SPILLWAY DETAILS

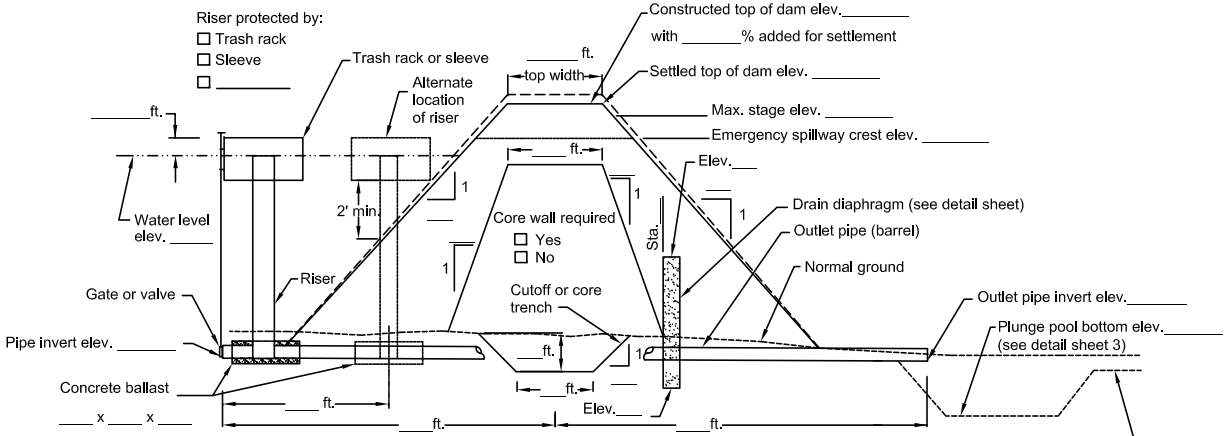

SECTION ALONG CL PRINCIPAL SPILLWAY

Centerline station _____

(Not to scale)

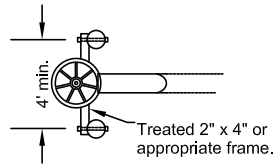

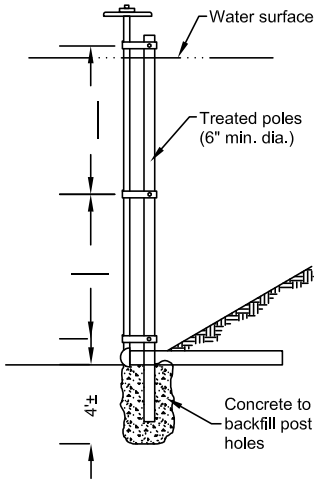

SUPPORT FOR GATE VALVE

Note: Mark out with red ink those items not required.

BENCHMARK DESCRIPTION

_____

_____

_____

_____

_____

_____

CERTIFICATION

I certify that I have made, or caused to be made, a final inspection of this pond project and that all work related thereto has been completed in accordance with these plans and with all other applicable specifications except as listed on the attached sheet.

(Check here ____ if no exceptions)

_____ _____ _____
Signature Title Date

File Name

Drawing No. AL–ENG–3

Rev. 1/16

Sheet 1 of 3

Date

Designed _____

Drawn _____

Checked _____

Approved _____

PLAN OF POND

_____ Landowner

_____ County, AL

United States Department of Agriculture

Natural Resources Conservation Service

GENERAL

Detailed engineering plans of the proposed embankment, spillway(s), and reservoir on the reverse side of this sheet are part of these specifications.
All facilities for impounding water shall comply strictly with all rules and regulations of the Alabama State Board of Health laws, Alabama Department of Environmental Management, and EPA or other pertinent regulations.

RESPONSIBILITIES OF

A. LANDOWNERS:
The landowner is responsible for obtaining all required permits. The landowner must acquaint himself with these plans and specifications to determine that the completed structure will fulfill his present and future needs. Inspection during construction will be the responsibility of the landowner. The landowner is responsible to request inspection assistance from NRCS personnel.
B. CONTRACTOR:
The contractor is to be acquainted with the provisions of these plans and specifications, conditions at the site that may affect the schedule of operation, and the location and meaning of all stakes on the site. All benchmarks, grade and line stakes must be left undisturbed and protected by the contractor to facilitate construction and inspection.
C. U.S. DEPARTMENT OF AGRICULTURE - NATURAL RESOURCES CONSERVATION SERVICE
The United States and its employees are in no manner a party to any verbal or written contract between the landowner and the contractor. NRCS employee(s), within limit of personnel available, will assist the landowner with inspection and advise on technique during construction to assure satisfactory compliance with the plans and specifications.

SPECIFICATIONS FOR CONSTRUCTION OF PONDS AND RESERVOIRS

EROSION AND SEDIMENT CONTROL: During construction, erosion will be minimized and sediment controlled according to guidelines in Alabama Guide Sheet AL378B, Erosion Control During Farm Pond Construction.
CLEARING: All trees and brush shall be cut as close to the ground as practical and removed from the site before water is impounded. Combustible material must be disposed of by burning, burying at approved locations, or removed from the site and stacked.
FOUNDATION PREPARATION: The foundation area shall be cleared of all trees, stumps, and debris. All topsoil containing excessive amounts of organic material shall be removed. All sharp breaks shall be sloped to not steeper than 1:1 and the foundation thoroughly scarified before placement of the embankment fill.
CUTOFF TRENCH: A cutoff trench shall be excavated to the depth, bottom width, and side slopes shown on the plans or as staked in the field. The cutoff trench shall be backfilled in layers not to exceed 8 inches in thickness. Standing water shall be removed from the trench before backfilling is started.
SPILLWAY AND BORROW EXCAVATION: Spillway(s) will be excavated in undisturbed earth and conform to the grades, bottom width, and side slopes shown on the plans. All borrow areas shall be graded so as to be well drained and protected from erosion by the use of diversions or other conservation measures. Side slopes of borrow areas shall be left in such condition that establishment of vegetation, mowing, and maintenance operations will be facilitated. Surface soils excavated and saved from the foundation, spillway, and borrow areas shall be placed on the dam, borrow areas, and spillway to facilitate establishment of vegetation.
EMBANKMENT CONSTRUCTION: The material placed in the embankment shall be free of sod, roots, stones over 6 inches in diameter, and other objectionable materials. The fill material shall be placed and spread over the entire fill, starting at the lowest point of the foundation, in layers not to exceed 8 inches in thickness. Construction of the fill shall be undertaken only at such time that the moisture content of the fill material will permit satisfactory compaction. Special equipment will be used when the required compaction cannot be contained by routing of the construction equipment.
FILL MATERIAL: Fill material shall be taken from borrow areas designated by the technician. The NRCS technician will advise the contractor regarding the maximum allowable depth of cut in each borrow area. In the event this depth is exceeded in the impoundment area, it shall be the responsibility of the contractor, to cover the exposed area with a minimum of 2 feet of impervious material.
PIPE CONDUIT: The pipe conduit barrel shall be placed on a firm foundation to the grade specified. Select backfill material shall be placed around the pipe and its component parts in layers not exceeding 4 inches and each successive layer thoroughly hand compacted. Mechanical compaction with the hand equipment shall continue until 2 ft. of fill is over the pipe. When a pipe is required, the riser must be installed completely before final inspection and certification of practice is made. The inlet of the riser should be protected by a trash rack or sleeve.
DRAINAGE DIAPHRAGM: Drainage diaphragm will be of materials and dimensions and located as specified.
VEGETATION: Adapted vegetation shall be established on all exposed surfaces of the embankment, spillway, borrow, and spoil areas as soon as possible after construction. Vegetation will be applied as critical area planting and will include seedbed preparation, seeding, liming, fertilizing, and when needed mulching.

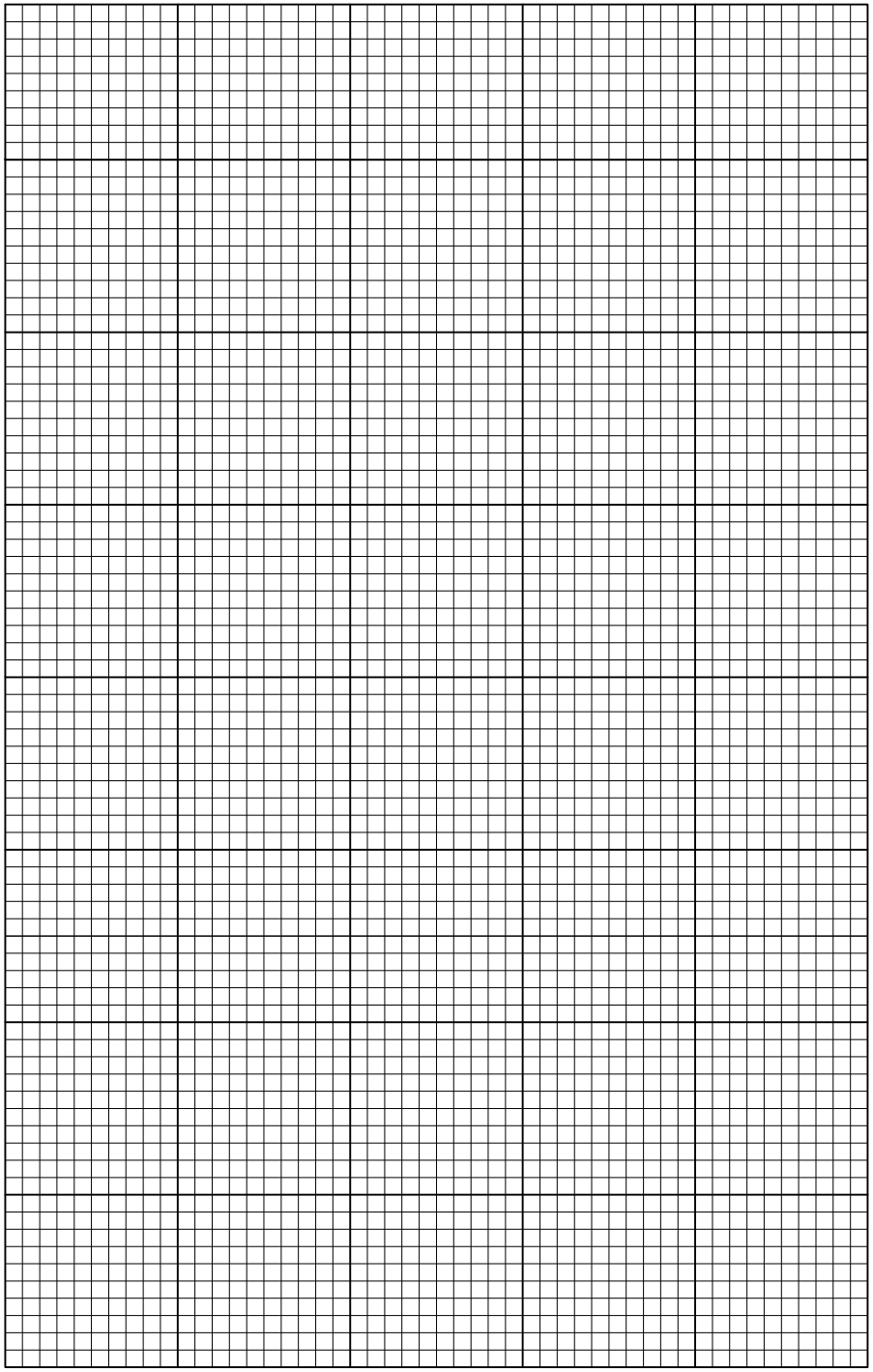

File Name

Drawing Name
AL-ENG-3

Rev. 1/16
Sheet 2 of 3

Date

Designed

Drawn

Checked

Approved

PLAN OF POND

_____ Landowner

_____ County, AL

United States Department of Agriculture

Natural Resources Conservation Service

NOTES:

1. THE TOP OF THE DRAINAGE DIAPHRAGM SHALL BE THE LESSER OF THE NORMAL POOL ELEVATION OR AN ELEVATION 3X THE PIPE DIAMETER ABOVE THE TOP OF THE PIPE.
2. LOCATE FILTER DIAPHRAGM AS FAR DOWNSTREAM AS POSSIBLE, LEAVING REQUIRED 2.0 FT. OF COVER OVER DIAPHRAGM.

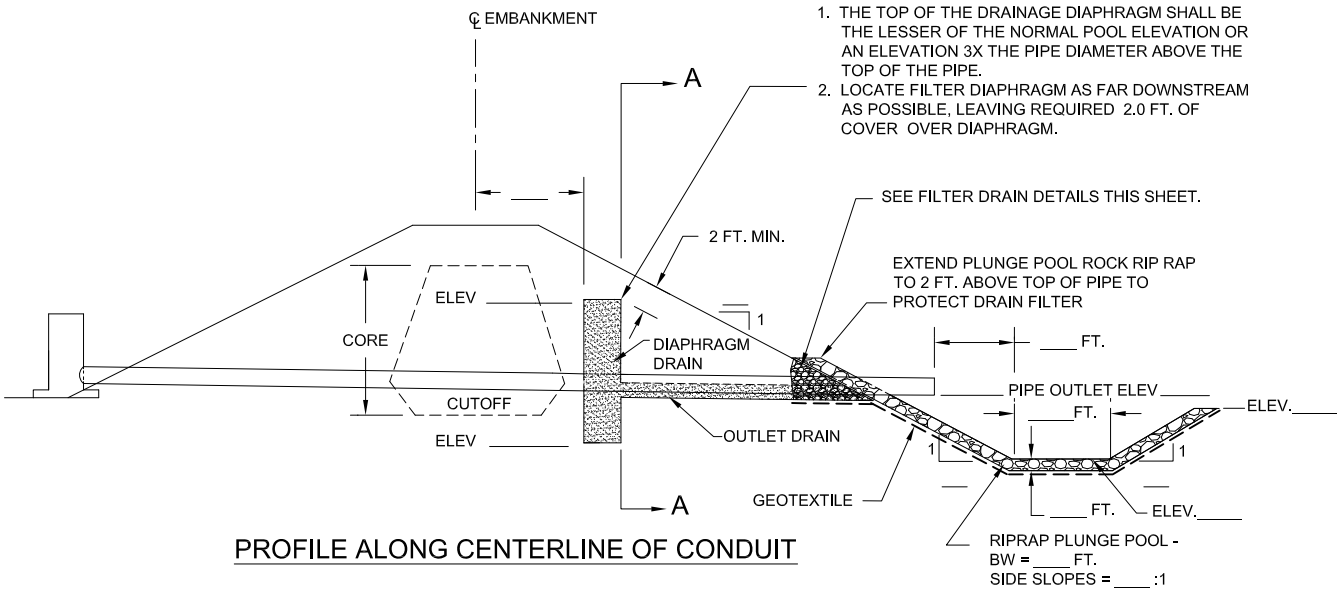

PROFILE ALONG CENTERLINE OF CONDUIT

MATERIAL NOTES

1. THE GEOTEXTILE SHALL BE 8 OZ. NONWOVEN WITH A MINIMUM GRAB TENSILE STRENGTH OF 202 LBS. AND A MINIMUM PUNCTURE STRENGTH OF 433 LBS.
2. THE FILTER MATERIAL SHALL CONFORM TO ASTM C-33 FINE AGGREGATE.

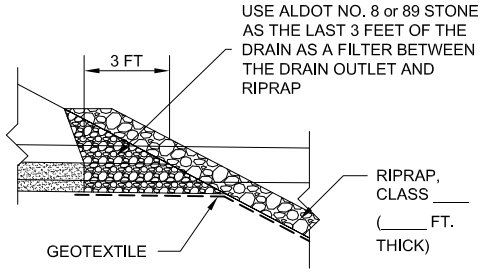

FILTER DRAIN OUTLET

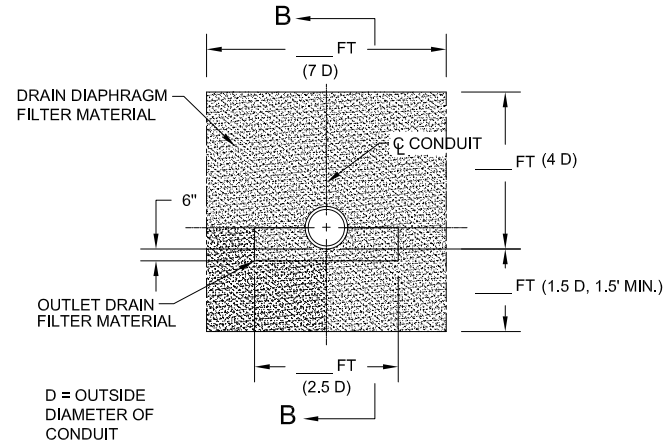

SECTION A-A

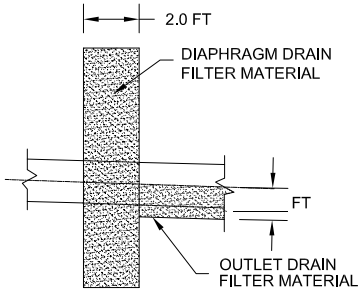

SECTION B-B

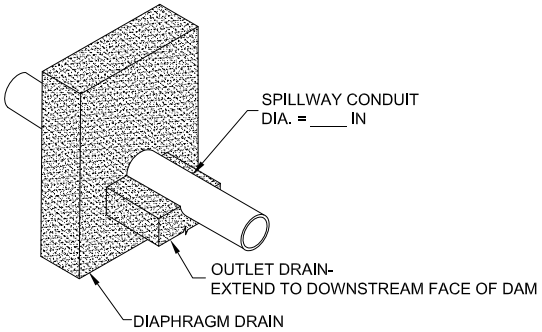

PARTIAL ISOMETRIC

CONSTRUCTION NOTES: (SAND COMPACTION)

DRAIN FILTER MATERIAL SHALL BE PLACED UNIFORMLY IN LAYERS NOT TO EXCEED 8" THICK BEFORE COMPACTION.

COMPACTION OPTIONS:

OPTION #1: EACH LAYER SHALL BE THOROUGHLY WETTED AND IMMEDIATELY DRAINED TO ACHIEVE ADEQUATE COMPACTION.
OPTION #2: EACH LAYER OF DRAIN FILL SHALL BE COMPACTED BY A MINIMUM OF 2 PASSES OF A VIBRATORY PLATE COMPACTOR WEIGHING AT LEAST 160 POUNDS OR A VIBRATORY SMOOTH WHEELED ROLLER WEIGHING AT LEAST 325 POUNDS.

NO OTHER SAND COMPACTION OPTIONS ARE APPROVED.

ESTIMATED QUANTITIES

FILTER MATERIAL (C-33 FINE AGGREGATE)	_____ TONS
ALDOT NO. 8 or 89 STONE	_____ TONS
RIPRAP, CLASS _____	_____ TONS
GEOTEXTILE, NON-WOVEN, 8 OZ.	_____ SQ.YDS.

File Name

Drawing Name AL–ENG–3

Rev. 1/16

Sheet 3 of 3

Date

Designed

Drawn

Checked

Approved

EMBANKMENT POND DIAPHRAGM DRAIN AND PLUNGE POOL

_____ Landowner

_____ County, AL

United States Department of Agriculture

Natural Resources Conservation Service