Notes:

*1. Bar size to be determined by the Engineer based on diameter of the pipe used for the inlet.

**2. Add other horizontal members at 5" max. increments to the total height of the trash rack until desired height is obtained.

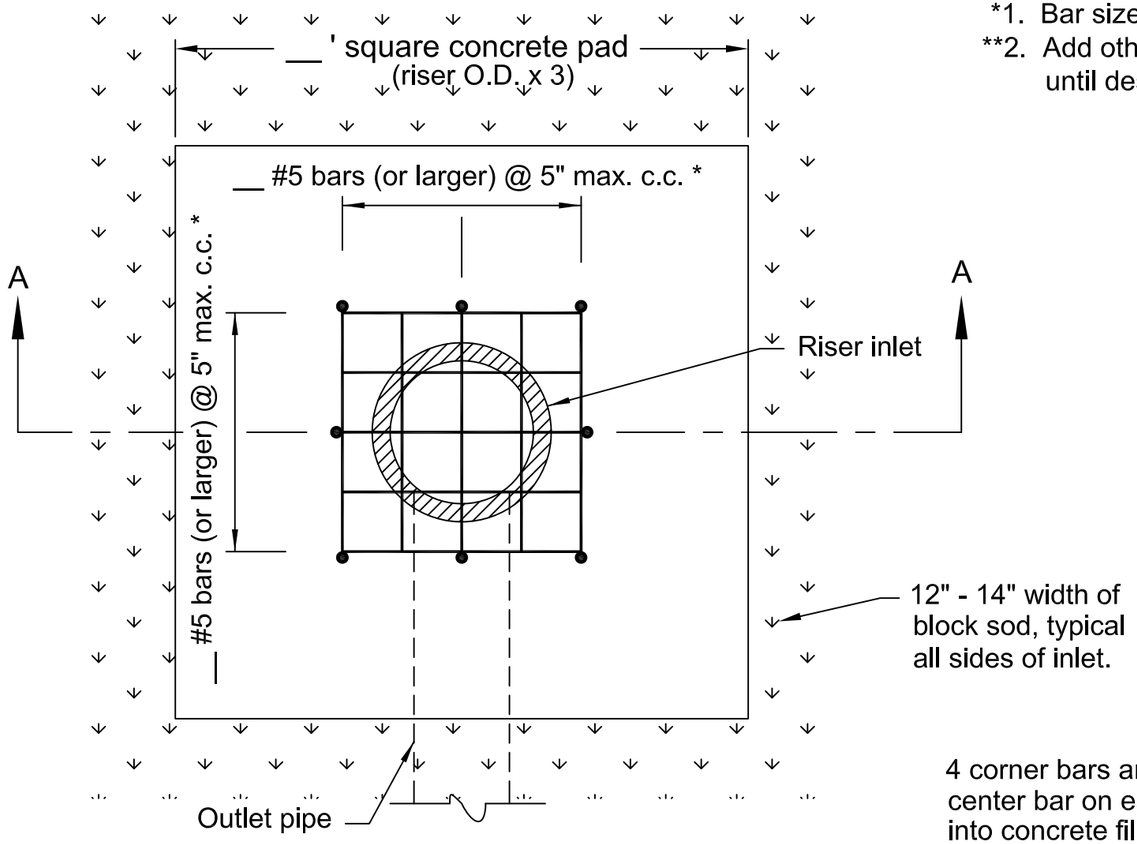

Plan View

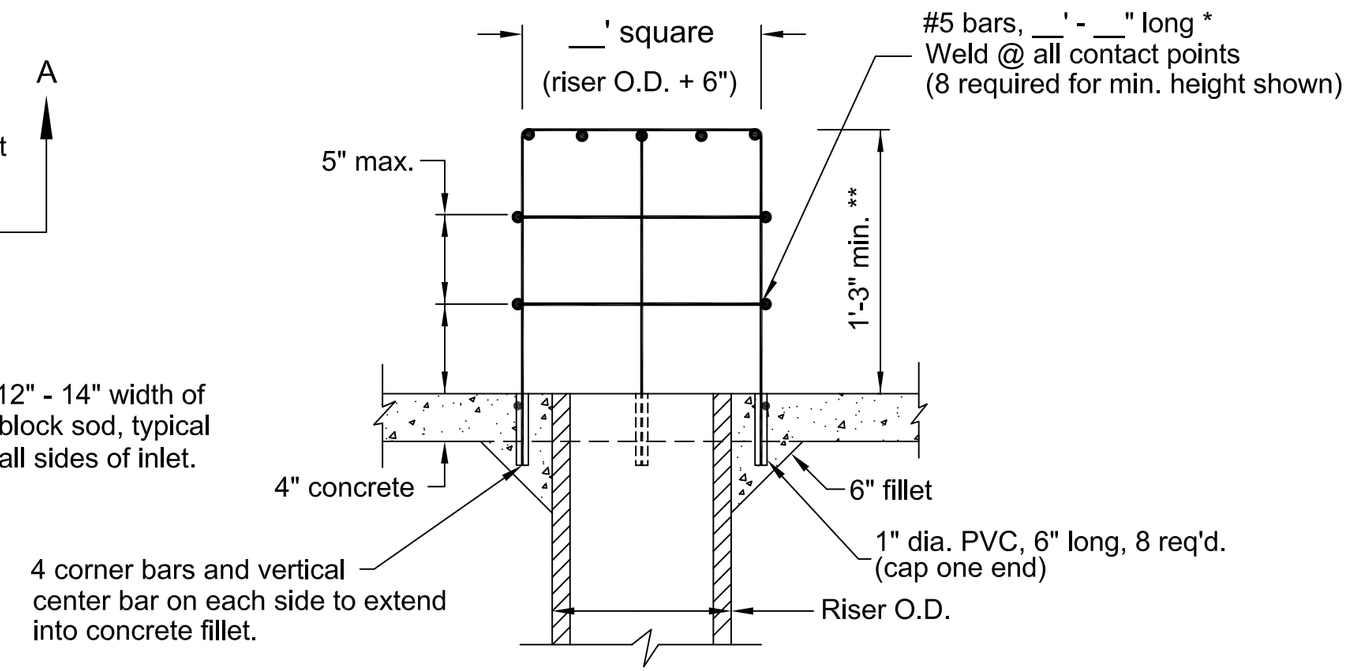

Section A-A

Trash Rack for Concrete Inlet Pad

(Not to scale)

Designed Alabama NRCS Date 11/13

Drawn

Checked

Approved

Trash Rack for Concrete Inlet Pad

Landowner

County, Alabama

NRCS

Natural Resources Conservation Service

United States Department of Agriculture

Revised 12/13

Drawing No. AL-ENG-410-01

Sheet 1 of 1