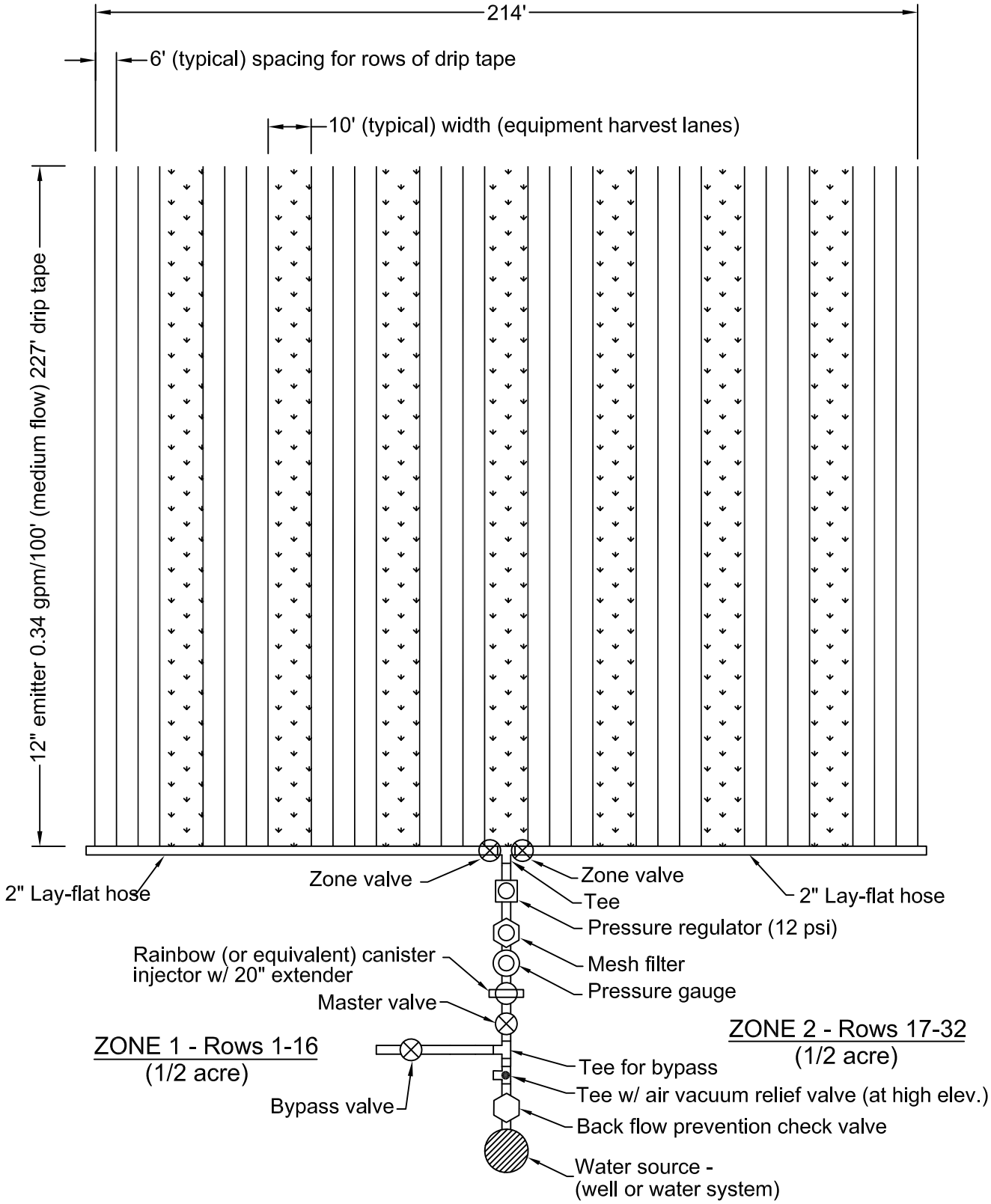

Note: 1. All components are 1.5" diameter except where otherwise noted.
2. Due to 10' travelways, 1.12 acres of land are required for 1 acre of micro-irrigation.
3. See requirements on sheet 6 of 6.

PLAN VIEW
(Not to scale)

USDA United States Department of Agriculture Natural Resources Conservation Service	1 ACRE – 2 ZONE TYPICAL MICRO–IRRIGATION / PLASTICULTURE _____ Landowner _____ County, AL	Designed K.G. Aycock 4/06 Drawn J.L. Dowdy 5/06 Checked P.L. Oakes 6/15 Approved D. Guthrie 7/15	File Name Drawing Name AL–ENG–441–01 Rev. 6/15 Sheet 1 of 6

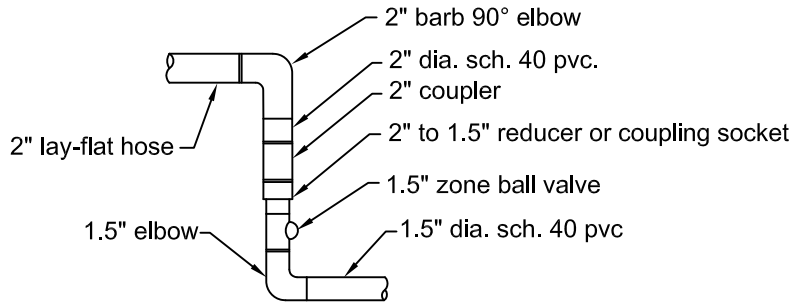

DETAIL 'A'

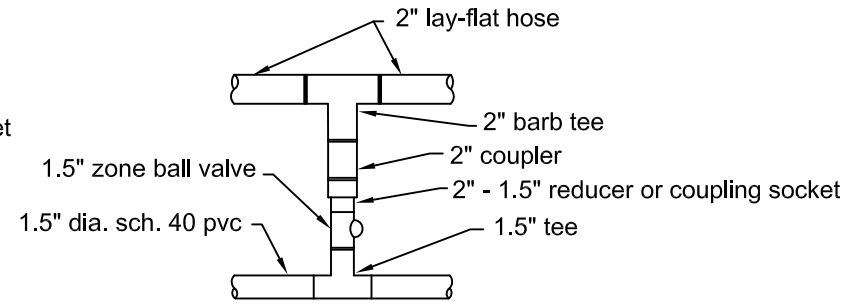

DETAIL 'B'

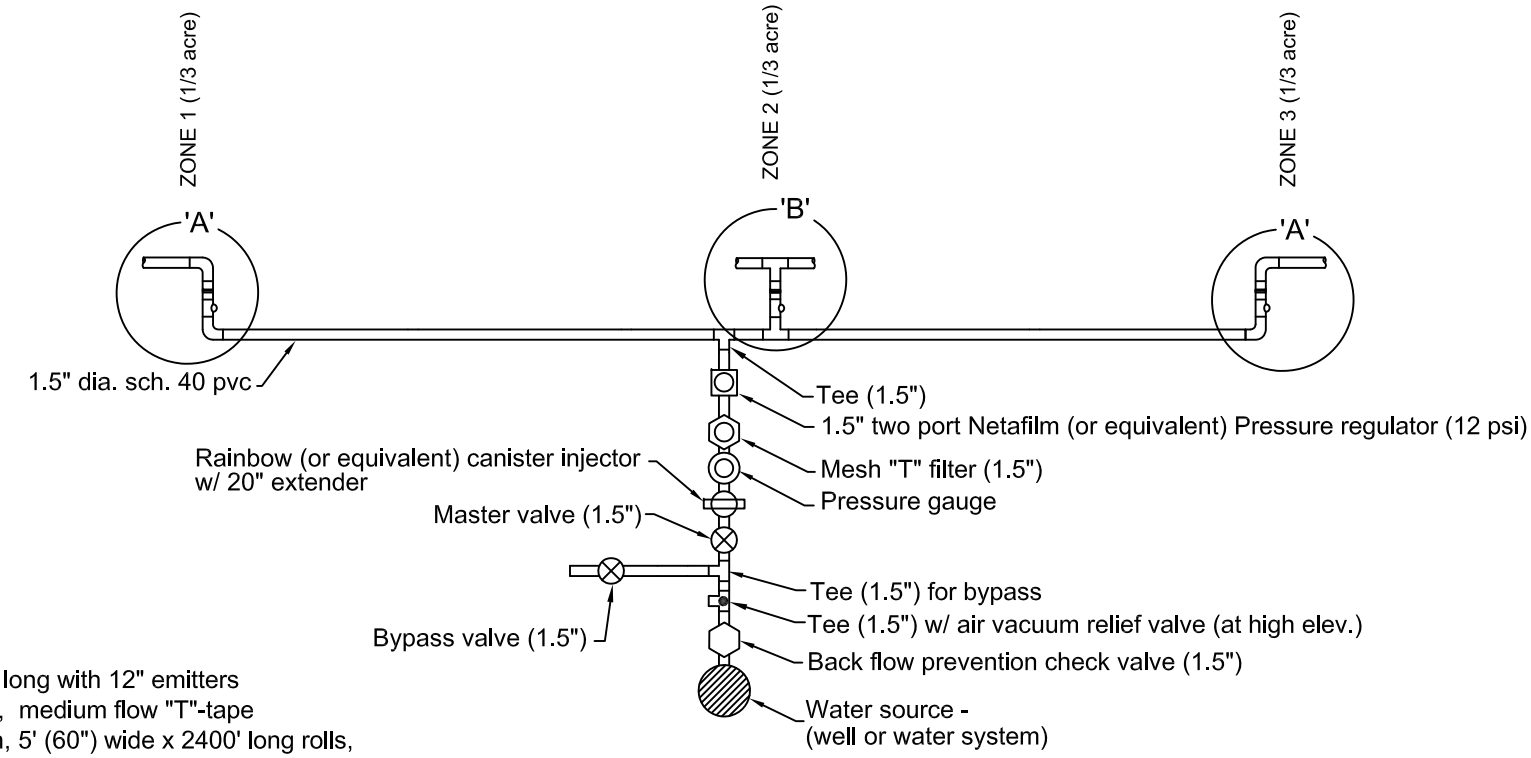

HEADER DETAILS
(Not to scale)

Notes:
1. All rows are 202' long with 12" emitters @ 0.34 gpm/100', medium flow "T"-tape with plastic mulch, 5' (60") wide x 2400' long rolls, 12 rows per zone.
2. All PVC pipe is schedule 40.
3. Detail using 1.5" dia. sch. 40 pvc and 2" lay-flat hose.
4. See requirements on sheet 6 of 6.

File Name

Drawing Name AL-ENG-441-01

Rev. 6/15

Sheet 2 of 6

		Date
Designed	K.G. Aycock	4/06
Drawn	J.L. Dowdy	6/06
Checked	P.L. Oakes	6/15
Approved	D. Guthrie	7/15

1 ACRE – 3 ZONE TYPICAL
MICRO–IRRIGATION / PLASTICULTURE

Landowner _____ County, AL _____

USDA United States Department of Agriculture
Natural Resources Conservation Service

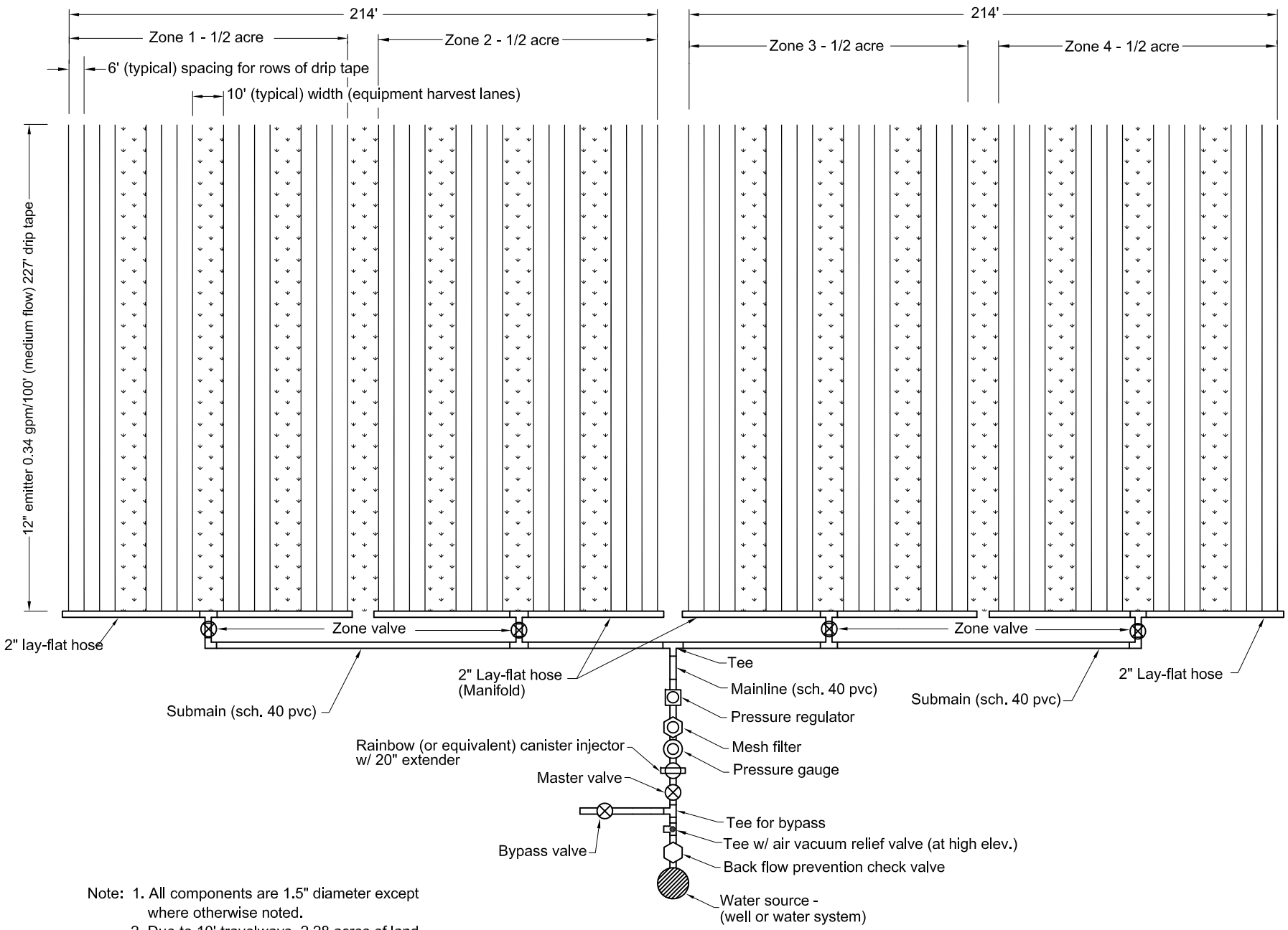

Note: 1. All components are 1.5" diameter except where otherwise noted.
2. Due to 10' travelways, 2.28 acres of land are required for 2 acres of micro-irrigation.
3. See requirements sheet 6 of 6.

PLAN VIEW
(Not to scale)

File Name

Drawing Name AL-ENG-441-01

Rev. 6/15

Sheet 3 of 6

		Date
Designed	K.G. Aycock	4/06
Drawn	J.L. Dowdy	6/06
Checked	P.L. Oakes	6/15
Approved	D. Guthrie	7/15

2 ACRE – 4 ZONE TYPICAL
MICRO-IRRIGATION / PLASTICULTURE

_____ Landowner _____ County, AL

USDA United States Department of Agriculture
Natural Resources Conservation Service

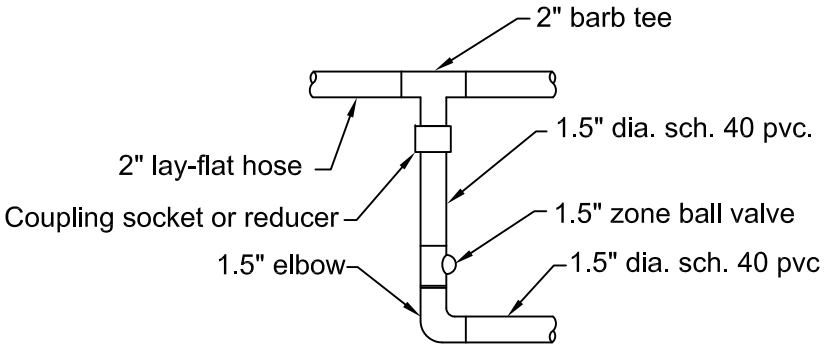

DETAIL 'A'

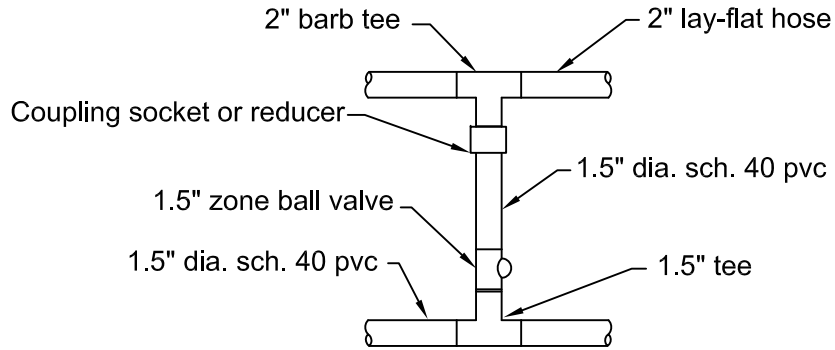

DETAIL 'B'

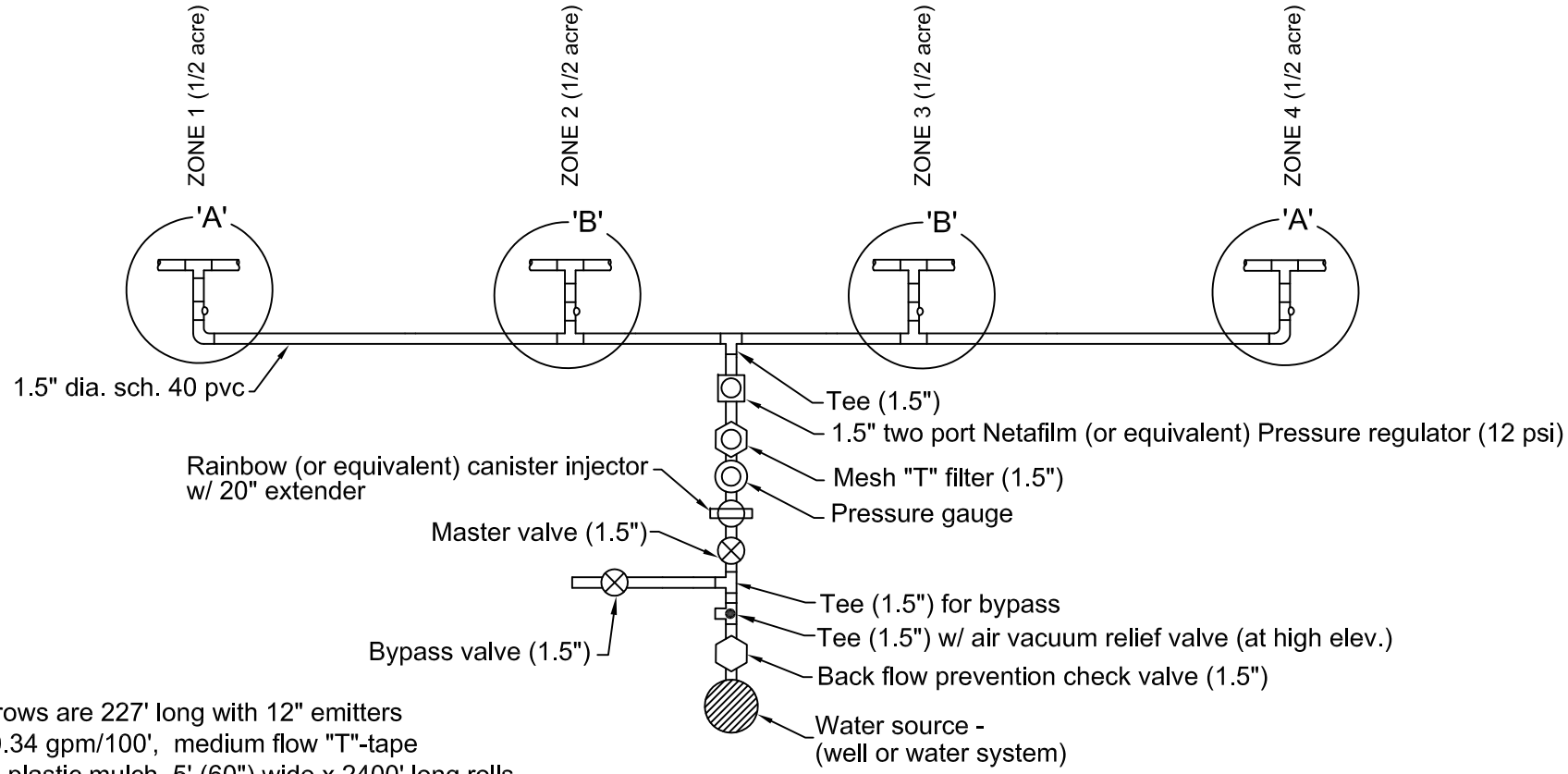

Notes:

1. All rows are 227' long with 12" emitters @ 0.34 gpm/100', medium flow "T"-tape with plastic mulch, 5' (60") wide x 2400' long rolls, 16 rows per zone.
2. All pvc pipe is schedule 40.
3. See requirements sheet 6 of 6.

HEADER DETAILS
(Not to scale)

File Name

Drawing Number AL-ENG-441-01

Rev. 6/15

Sheet 4 of 6

		Date
Designed	K.G. Aycock	4/06
Drawn	J.L. Dowdy	6/06
Checked	P.L. Oakes	6/15
Approved	D. Guthrie	7/15

2 ACRE – 4 ZONE TYPICAL
MICRO-IRRIGATION / PLASTICULTURE

_____ Landowner _____ County, AL

USDA United States Department of Agriculture

Natural Resources Conservation Service

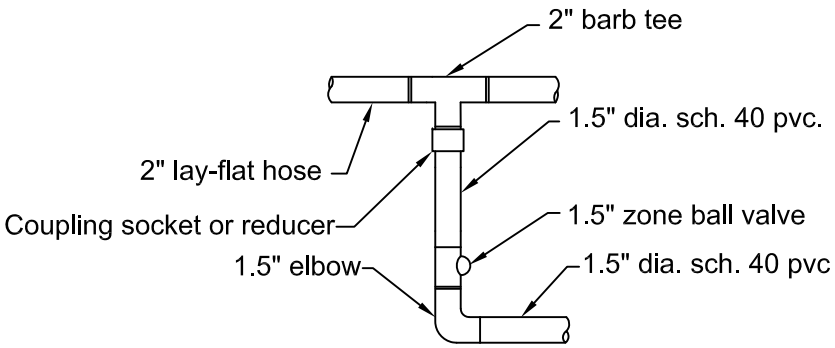

DETAIL 'A'

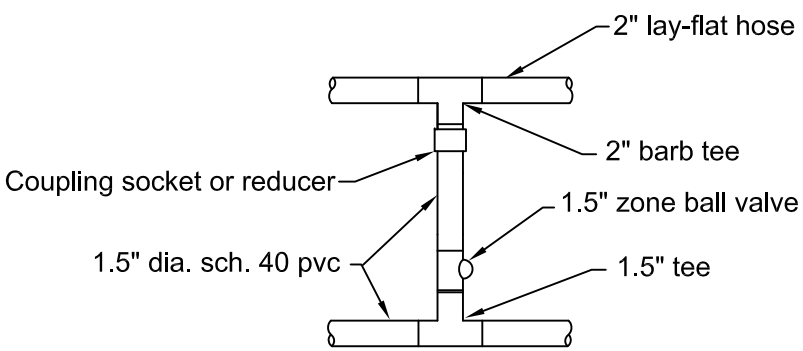

DETAIL 'B'

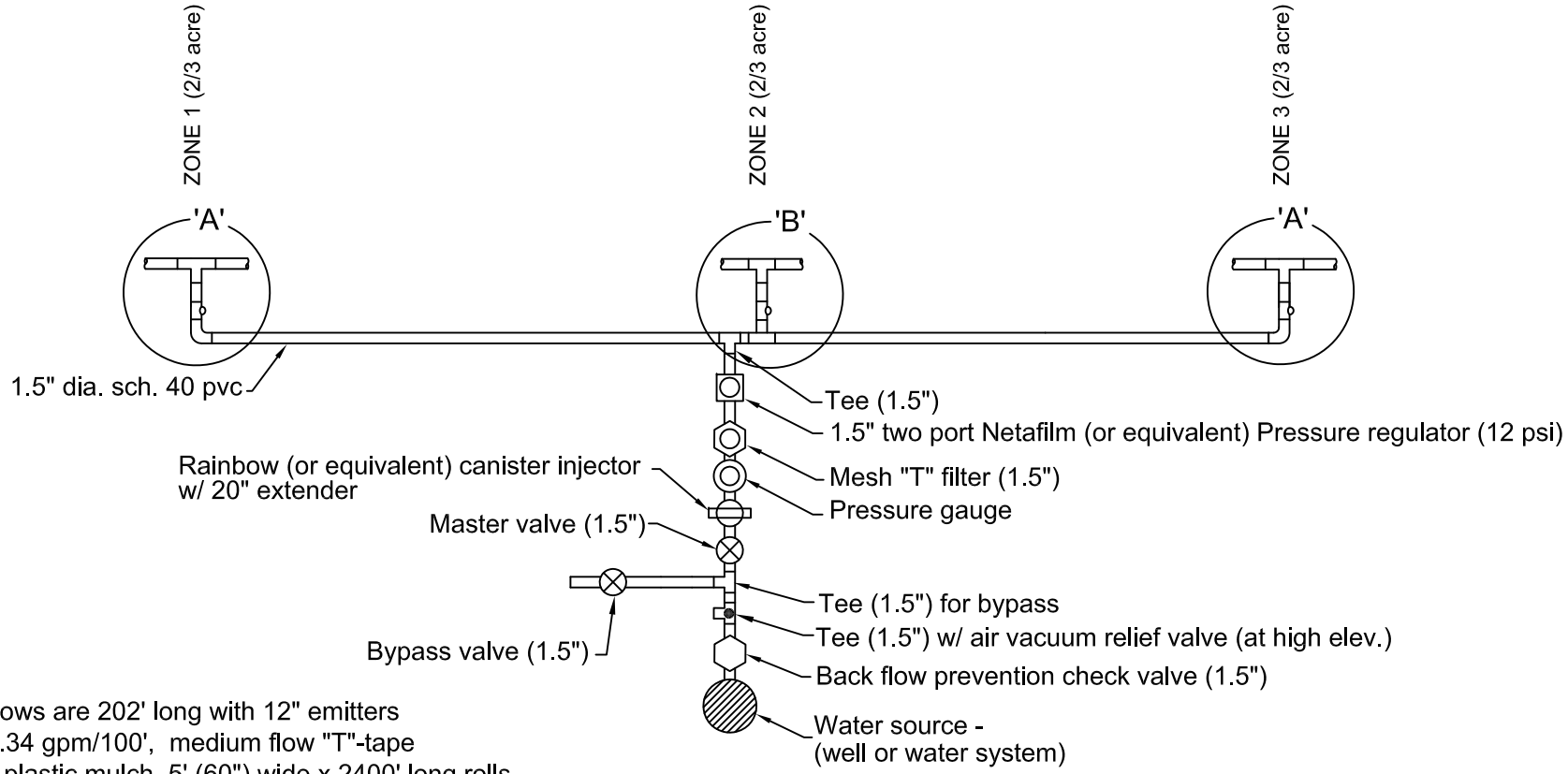

Notes:

1. All rows are 202' long with 12" emitters @ 0.34 gpm/100', medium flow "T"-tape with plastic mulch, 5' (60") wide x 2400' long rolls, 24 rows per zone.
2. All pvc pipe is schedule 40.
3. See requirements sheet 6 of 6.

HEADER DETAILS
(Not to scale)

File Name

Drawing Name AL-ENG-441-01

Rev. 6/15

Sheet 5 of 6

		Date
Designed	K.G. Aycock	4/06
Drawn	J.L. Dowdy	6/06
Checked	P.L. Oakes	6/15
Approved	D. Guthrie	7/15

2 ACRE – 3 ZONE TYPICAL
MICRO-IRRIGATION / PLASTICULTURE

_____ Landowner _____ County, AL

USDA United States Department of Agriculture
Natural Resources Conservation Service

Typical Micro-Irrigation / Plasticulture Requirements (AL-ENG-441-01)

(Special design is required if requirements are not met)

1. The field slope is 2% or less.
2. The rows are to be laid out so that there is no more that 1% slope in the row direction.
3. The maximum difference in elevation within a zone should be no more than 2.0 ft.
4. If the field is not level, the lay-flat hose (manifold) should be on the high side of the rows.
5. All pipe and fittings are 1.5" and the lay-flat manifold is 2.0".
6. If installing a new well for this system, the well should have a minimum flowrate (see below) at the Required Pressure in order to irrigate 1 zone.

Typical System	1 Acre – 2 Zones	1 Acre – 3 Zones	2 Acre – 4 Zones	2 Acre – 3 Zones
Minimum Flowrate (gpm)	13	8.5	13	17
Friction Factor (F) for 1.5" pipe	0.353	0.148	0.353	0.557

7. Determine the Required Pressure at the water source:

   Measure the distance (D) in ft. of a 1.5" pipe run between the water source and manifold.

   Measure the difference in elevation (E) in ft. between the water source and manifold. Note: E is positive (+) if the water source is lower than the manifold and negative (-) if the water source is higher than the manifold.

   Required Pressure (psi) = 35 psi + (F x D / 100) + (E/2.31)

8. An existing water source must deliver at least the minimum flowrate at the required pressure in order to irrigate ONE zone. To check the existing water source, install (in this order from the source using at least 1.5" pipe and fittings); a pressure gauge, a valve, and an elbow that can direct flow into a 5 gallon bucket.

   Turn the water source on with the valve open. The reading on the pressure gauge should be 0 psi. Close the valve until the Required Pressure is on the gauge. Measure how long in seconds it takes to fill a 5 gallon bucket. Divide the number of seconds into 300 to get gpm. For example:

   If it takes 23 seconds to fill a 5 gallon bucket. The flowrate is:

   300 / 23 = **13 gpm.**

Typical System	1 Acre – 2 Zones	1 Acre – 3 Zones	2 Acre – 4 Zones	2 Acre – 3 Zones
Minimum Seconds to fill a 5 gallon bucket	23	35	23	18

   If it takes more than the minimum seconds to fill the 5 gallon bucket, THE WATER SOURCE IS INADEQUATE. A special design will be required.

9. Always use a 12 psi pressure regulator in the system just prior to the manifold.