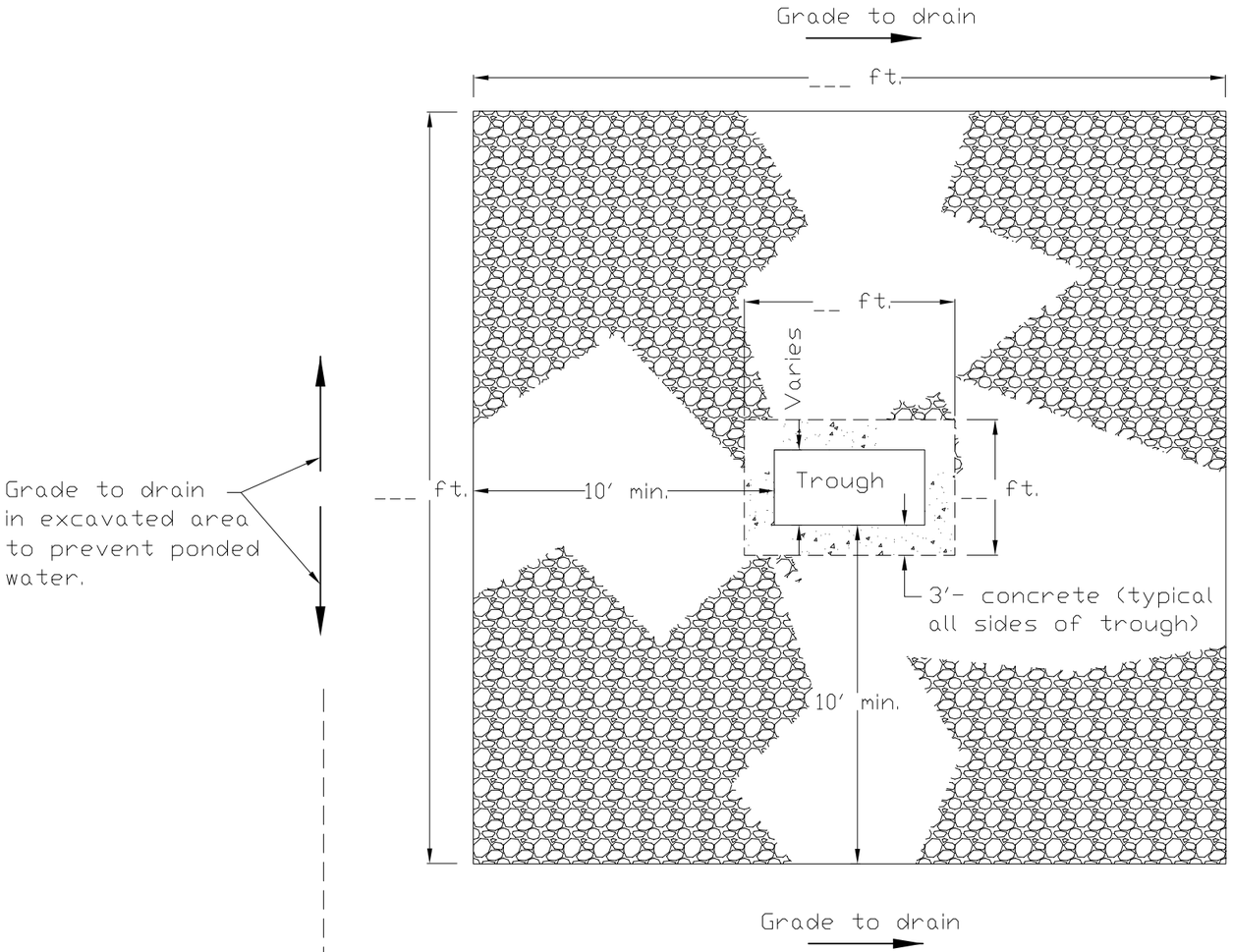

PLAN

NOTES:

1. Locate troughs on sites having an existing ground slope of 4% or flatter.
2. Concrete pad shall be 4″ min. thickness. Concrete shall meet the requirements in the construction specification for Conservation Practice Standard 561 - Heavy Use Area Protection.
3. Non-woven geotextile shall have a minimum tensile strength of 120 lb. and a puncture strength of 60 lb.
4. Graded aggregate base (GAB) shall meet the requirements in Conservation Practice Standard 561 - Heavy Use Area Protection.
5. Seed and mulch all disturbed areas according to Conservaton Practice Standard 342 - Critical Area Treatment.
6. Fountain-type waterers (ball waterers) are to be secured to the concrete pad according to the manufacturer's recommendations.
7. Troughs smaller than 500 gallon capacity (exclusive of concrete troughs or ball waterers) will be secured on at least four sides by using treated posts embedded at least 2 ft. through the concrete pad or by using 4″x4″x¼″ angle irons (4″ long min.) secured to the concrete pad with stainless steel anchor bolts and washers (see typicals).
8. See AL-ENG-614-01 or AL-Eng-614-02 for details of freeze-proof water supply installation.
9. On soils having high shrink/swell properties (CH, MH), excavate at least one foot below the bottom of the concrete pad and backfill with compact sand, gravel or SC material.

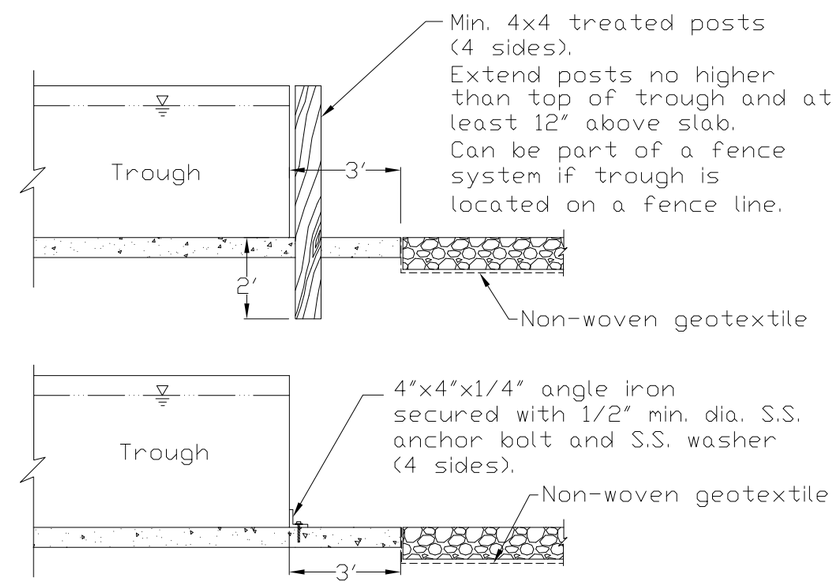

TYPICAL METHODS TO SECURE OPEN-TOP TROUGHS

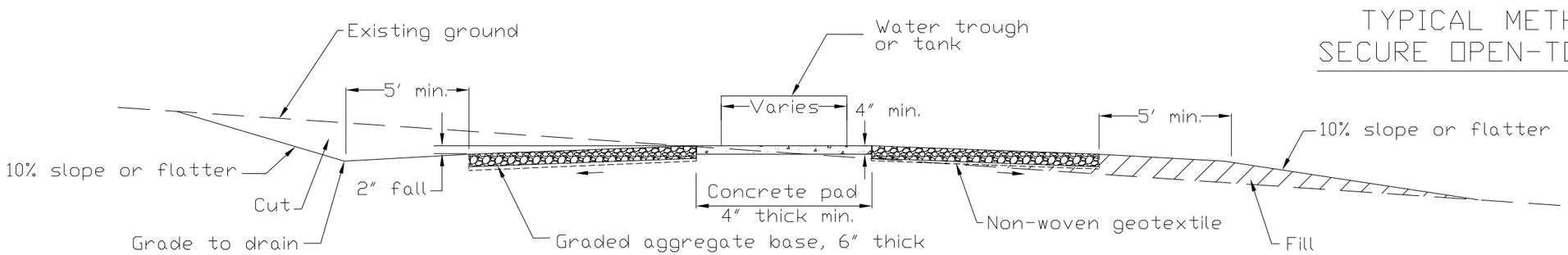

TYPICAL SECTION

(Details this sheet are not to scale)

Designed Alabama NRCS Date 9/12
Drawn
Checked
Approved

GAB HEAVY USE AREA PROTECTION FOR WATERING FACILITY

LANDOWNER/FARM
COUNTY, ALABAMA

NRCS Natural Resources Conservation Service United States Department of Agriculture

Rev. 1/16

Drawing No. AL-ENG-561-02

Sheet of