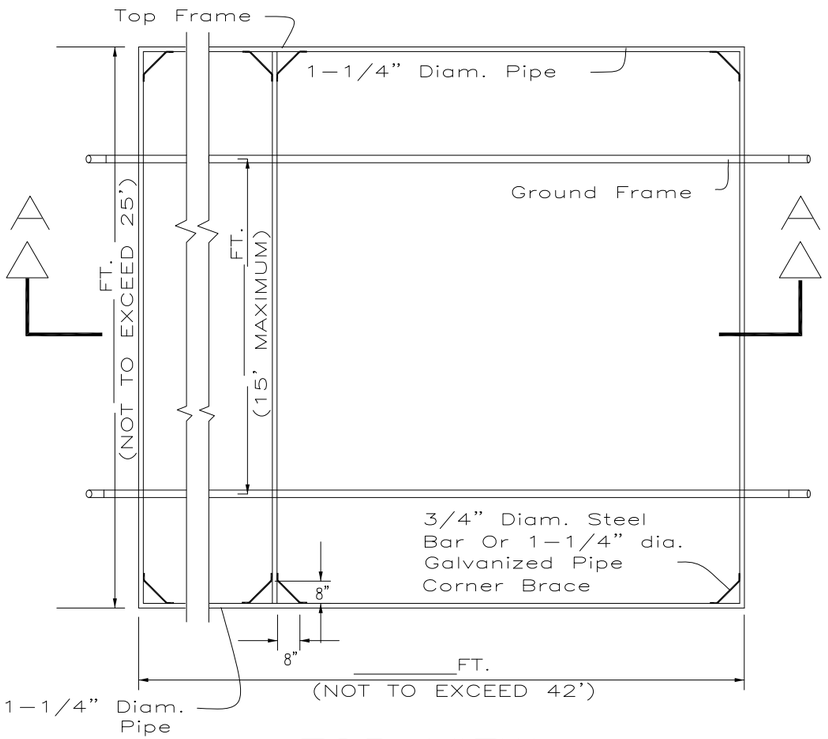

TOP VIEW

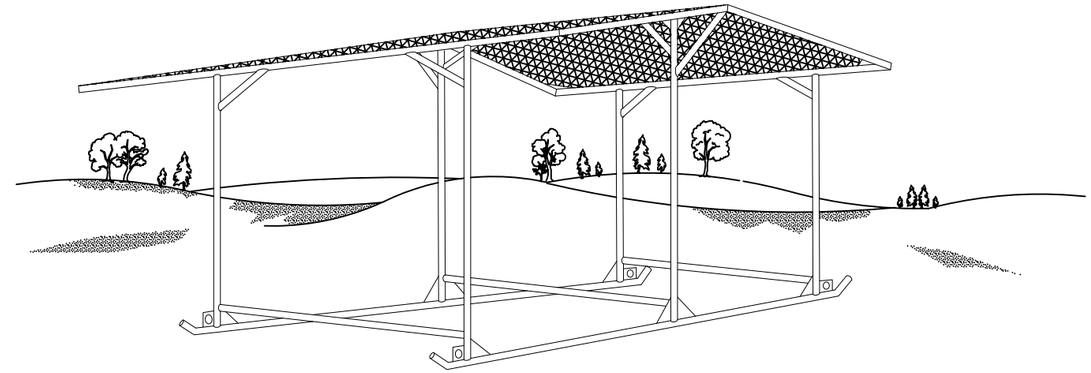

ISOMETRIC

NOTE:
Maximum Allowable Dimensions Are Noted In Parenthesis, Planned Dimensions Are To Be Inserted In The Blank Spaces. All Pipe Is 2" Dia.(min.) Except Where Noted.

BILL OF MATERIALS

Galvanized steel pipe (Schedule 40) :

2" dia. = _____ lin. ft. (frame)

1 1/4" dia. = _____ lin. ft. (frame)

1 1/4" dia. = 18.5 lin. ft.± (frame braces)

Shade cloth :

___ ft. x ___ ft. = ___ sq. ft.

1/4" steel plate = 2 sq. ft.

3/4" steel bar or 1 1/4" dia. galvanized pipe for corner braces = 10 lin. ft.±

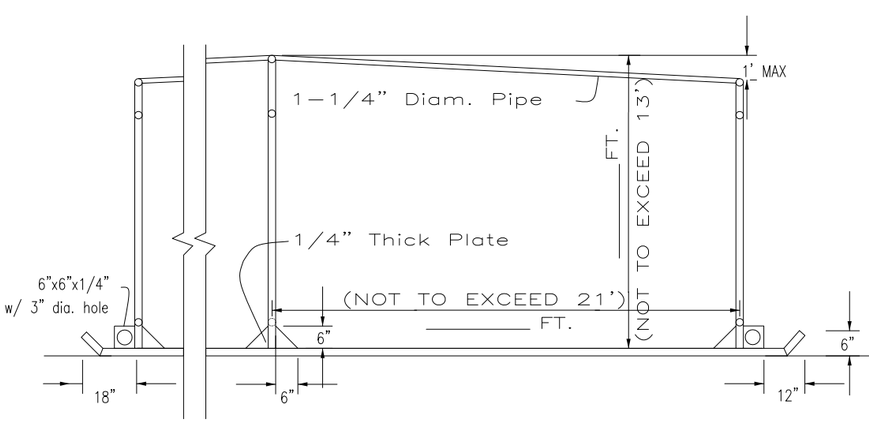

SECTION A–A

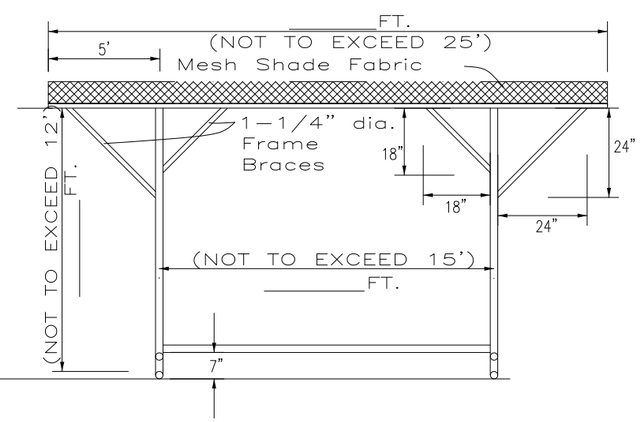

END VIEW

Before Proceeding with Construction,
Call the Alabama Line Location Center
ALABAMA ONE-CALL
Dial 811 or 1-800-292-8525

Revisions		
Date	Approved	Title
1/12/15	D. Guthrie	State Cons. Engnr.

(Details this sheet are not to scale)

Date
Designed ___ ___
Drawn ___ ___
Checked ___ ___
Approved ___ ___

PORTABLE LIVESTOCK SHELTER STRUCTURE
LANDOWNER _____
_____ COUNTY, AL

United States Department of Agriculture
Natural Resources Conservation Service

Date: 1/12/15

Drawing No.
AL–ENG–576–01

Sheet *1* of *1*