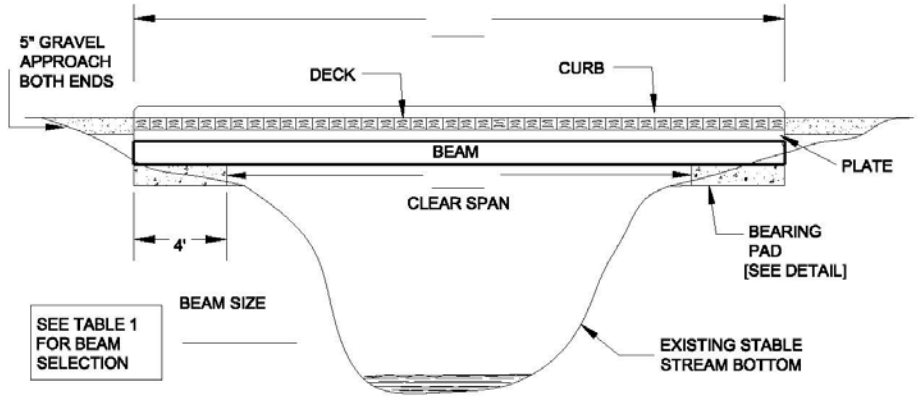

PROFILE - BRIDGE

n.t.s.

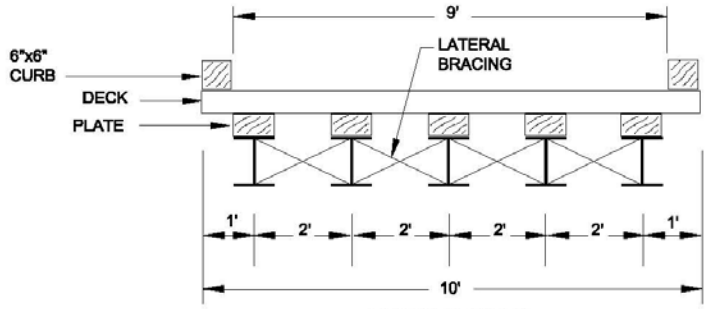

CROSS SECTION

n.t.s.

BILL OF MATERIALS *			
	CLEAR SPAN LENGTH = 20'	CLEAR SPAN LENGTH = 30'	CLEAR SPAN LENGTH = 40'
I-BEAMS	5@28'=140 L.F.	5@38'=190 L.F.	5@48'= 240 L.F.
DECK (10'X3"X8" BOARDS)	42 EA.	57 EA.	72 EA.
WOOD PLATE (3" X 8" or 3" X 6")	5@ 28' = 140 L.F.	5@ 38' = 190 L.F.	5@ 48' = 240 L.F.
WOOD CURB (6" X 6")	2@ 28' = 56 L.F.	2@ 38' = 76 L.F.	2@ 48' = 96 L.F.
LATERAL BRACING (21/2"X21/2"X3/8")	24 EA. (APPROX. 55 L.F.)	32 EA. (APPROX. 75 L.F.)	40 EA. (APPROX. 90 L.F.)
BEARING PAD CONCRETE	2.4 CU. YD.	2.4 CU. YD.	2.4 CU. YD.
#5 BARS	530 L.F. = 553 LBS.	530 L.F. = 553 LBS.	530 L.F. = 553 LBS.
ALTERNATE BEARING PAD CONC.	0.74 CU. YD./FT. PAD HEIGHT	0.74 CU. YD./FT. PAD HEIGHT	0.74 CU. YD./FT. PAD HEIGHT
#5 BARS (ALT. BEARING PAD)	119 LBS./ FT. PAD HEIGHT	119 LBS./ FT. PAD HEIGHT	119 LBS./ FT. PAD HEIGHT
4" X 1/2" PLATE BOLTS	75 EA.	100 EA.	125 EA.
10" X 5/8" CURB BOLTS	16 EA.	22 EA.	26 EA.
5 1/2" X 1/2" LAG BOLTS (DECK)	168 EA.	228 EA.	288 EA.
1/2" X 6" ANCHOR BOLTS	20 EA.	20 EA.	20 EA.

* DOES NOT INCLUDE STREAM BANK RIPRAP OR GRAVEL APPROACH

NRCS
Natural Resources Conservation Service
United States Department of Agriculture

TIMBER BRIDGE
FOR LIVESTOCK USE ONLY

Date
Designed
Drawn
Checked
Approved

File Name
DETAIL NO. TB-1
Drawing Name
AL-ENG-578-001
ISSUE DATE: 5/12
Sheet of