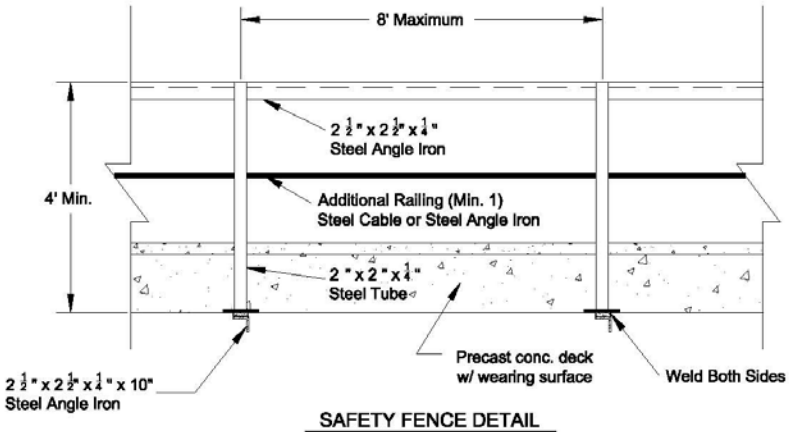

SAFETY FENCE DETAIL

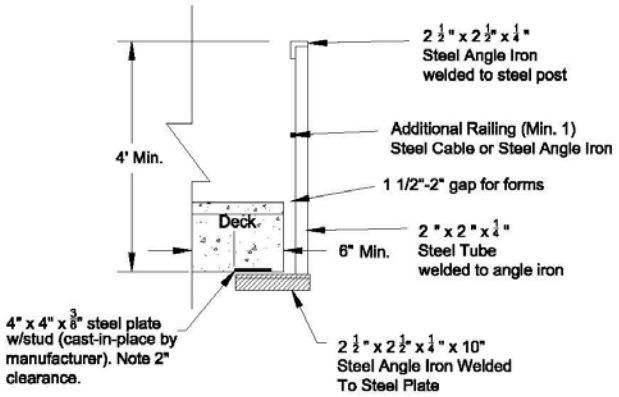

SAFETY FENCE ATTACHMENT DETAIL

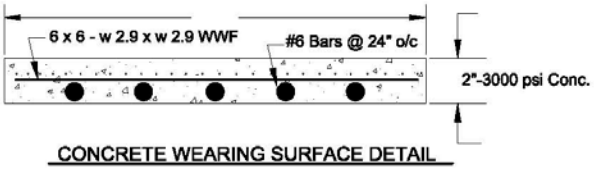

CONCRETE WEARING SURFACE DETAIL

NOTE: If rebar not used then 3/4" - 1" chairs or concrete bricks can be used at 2' spacing o/c to postion the WWF.

NRCS
Natural Resources Conservation Service
United States Department of Agriculture

PRESTRESSED CONCRETE BRIDGE DETAILS

Designed ____ Date
Drawn ____
Checked ____
Approved ____

File Name
DETAIL NO. PCB-2
Drawing Name
AL-ENG-578-010
ISSUE DATE: 5/12
Sheet of