NOTES:
1. Details on this sheet are not to scale.
2. All wood dimensions are nominal sizes.
3. All wooden components shall be pressure treated and rated for in-ground use.
4 See AL-ENG-561-02a for layout of trough and Heavy Use Area and for material requirements for Heavy Use Area.
5. In lieu of a meter box, the cutoff valve enclosure may be other appropriate structures
6. At least 2" of vertical clearance shall be provided between the top of the water supply pipe and the bottom edge of the water meter box or other cutoff valve enclosures.
7. The water meter box (or equivalent) shall be located outside the Heavy Use Area and suitably protected.

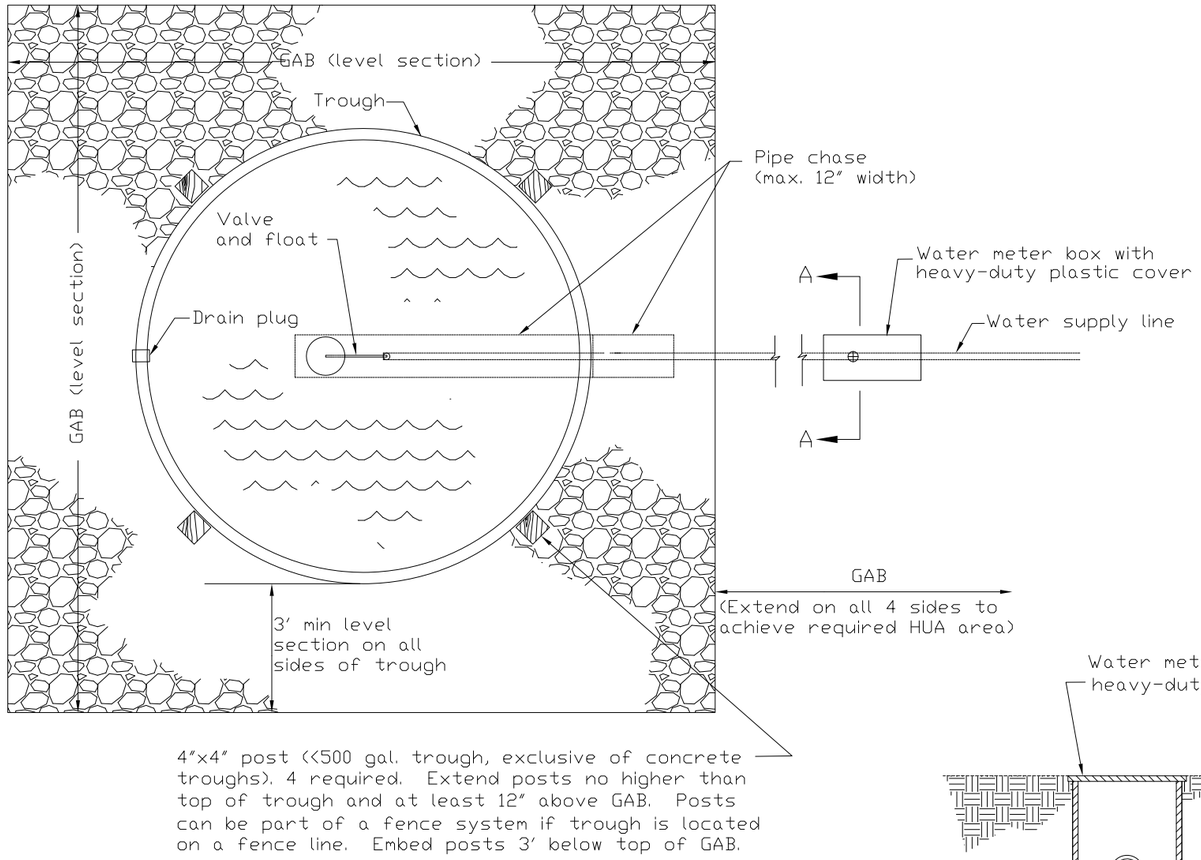

PLAN VIEW

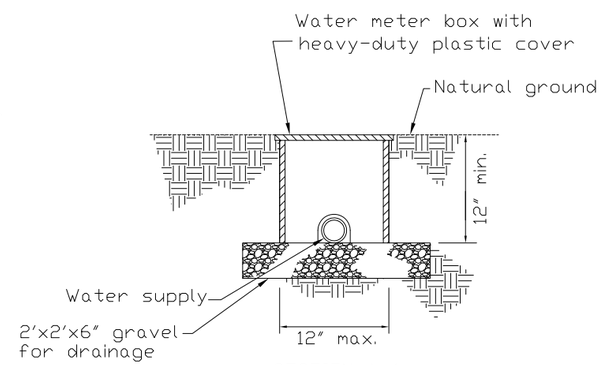

SECTION A-A

SEQUENCE OF CONSTRUCTION (GENERAL)

1. Shape and compact the subgrade as specified.
2. Excavate the pipeline trench and place pipe chase.
3. Place the 2x2 gravel drainage pad.
4. Install the water supply pipe to the pipe chase and backfill the pipe trench as specified.
5. Set posts if required.
6. Place geotextile and install the GAB.
7. Attach plumbing to bottom of trough and set trough in place.
8. Connect plumbing to water supply pipe and check for leaks.
9. Set meter box or alternative valve enclosure and fill around valve enclosure with sand. Fill on the back side of the valve enclosure as much as practical.
10. Remove removable part of pipe chase and place cement/sand grout
11. Complete construction of Heavy Use Area.
12. Smooth site and vegetate disturbed areas.

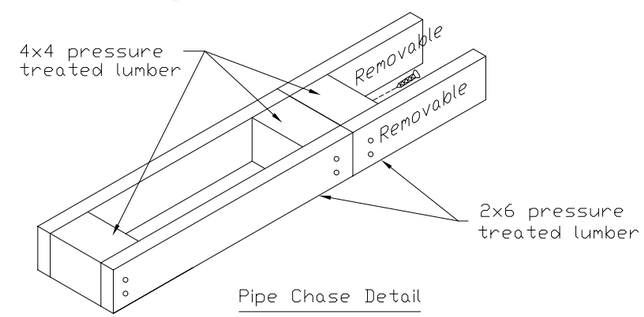

Pipe Chase Detail

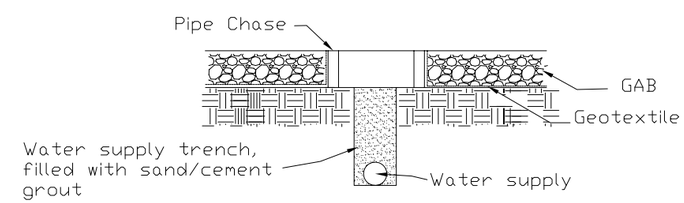

SECTION B-B

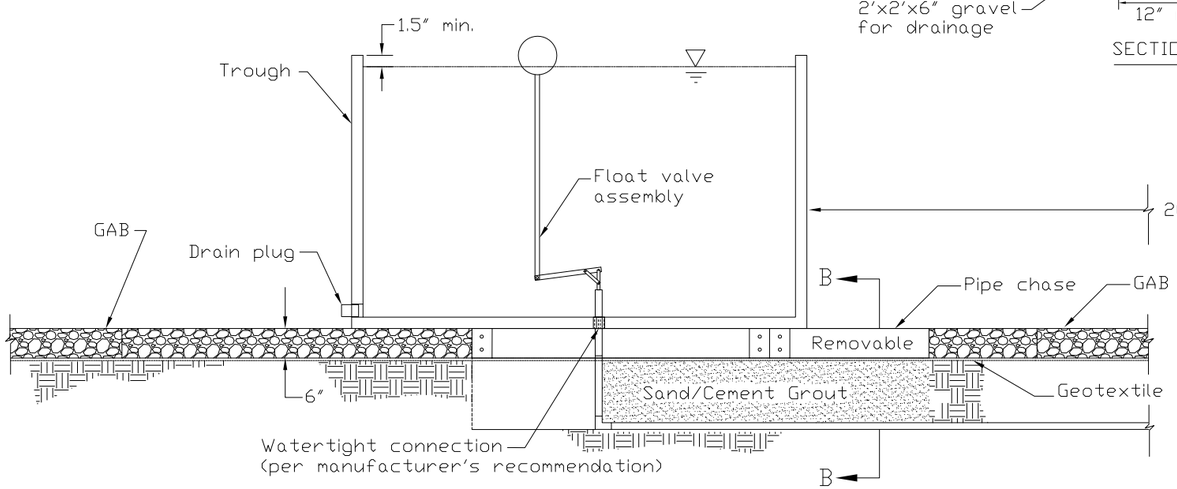

SIDE VIEW

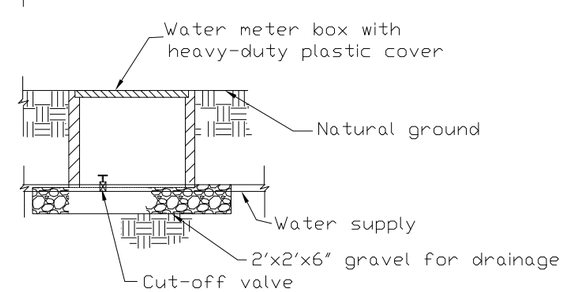

Date
Designed
Drawn
Checked
Approved

FREEZE-PROOF WATER SUPPLY FOR
BOTTOM-CONNECT WATER TROUGHS (GAB ONLY)
LANDOWNER
COUNTY, ALABAMA

NRCS
Natural Resources Conservation Service
United States Department of Agriculture

Rev. 6/13

Drawing No.
AL-ENG-614-01a

Sheet of