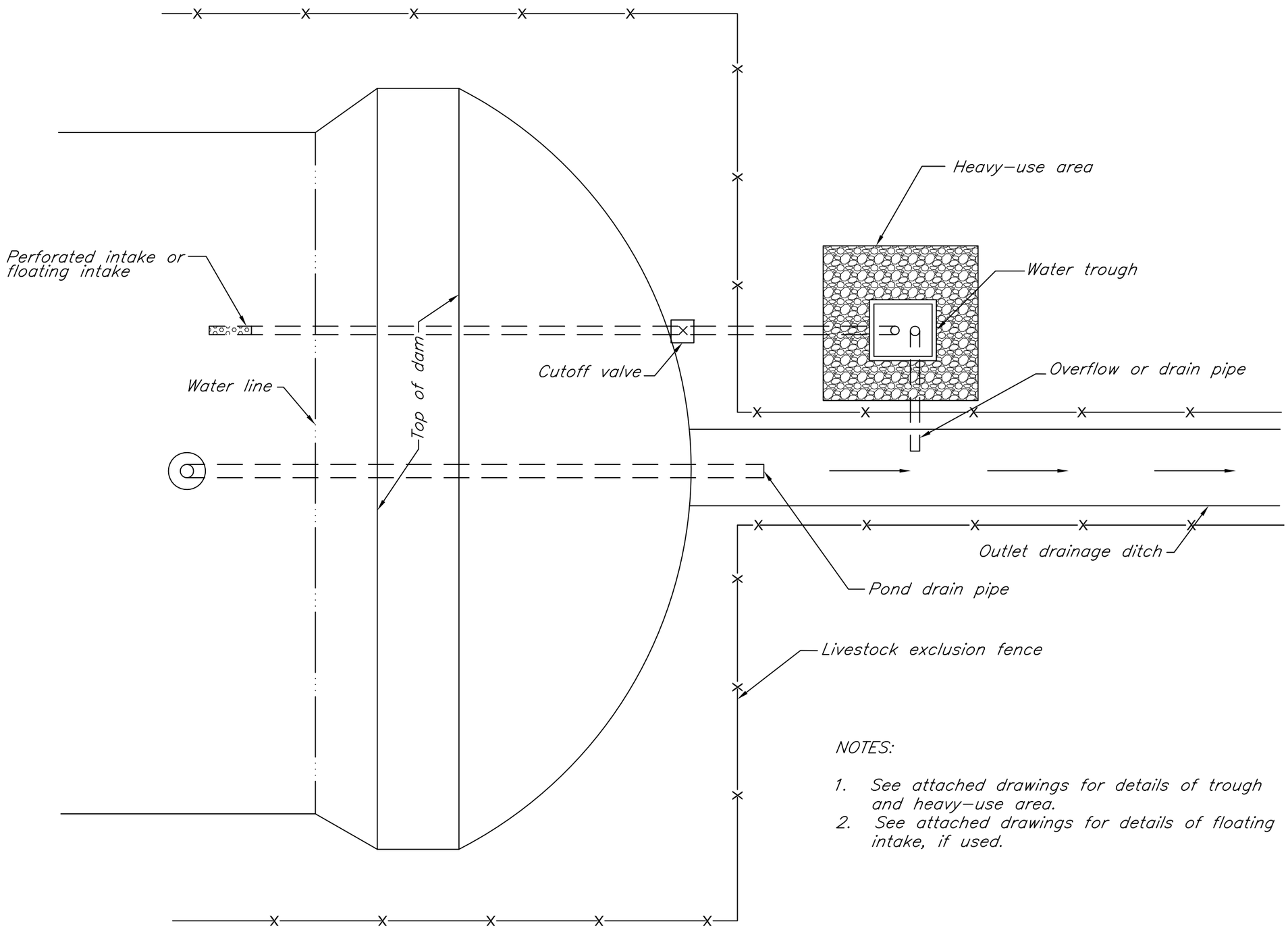

NOTES:

1. See attached drawings for details of trough and heavy-use area.
2. See attached drawings for details of floating intake, if used.

PLAN VIEW

(Details this sheet are not to scale)

Date

Designed

Drawn

Checked

Approved

LIVESTOCK WATERING WITH NO ACCESS TO POND

LANDOWNER

COUNTY, ALABAMA

NRCS

Natural Resources Conservation Service
United States Department of Agriculture

Rev. 5/13

Drawing No.
AL-ENG-516-02

Sheet 1 of 2

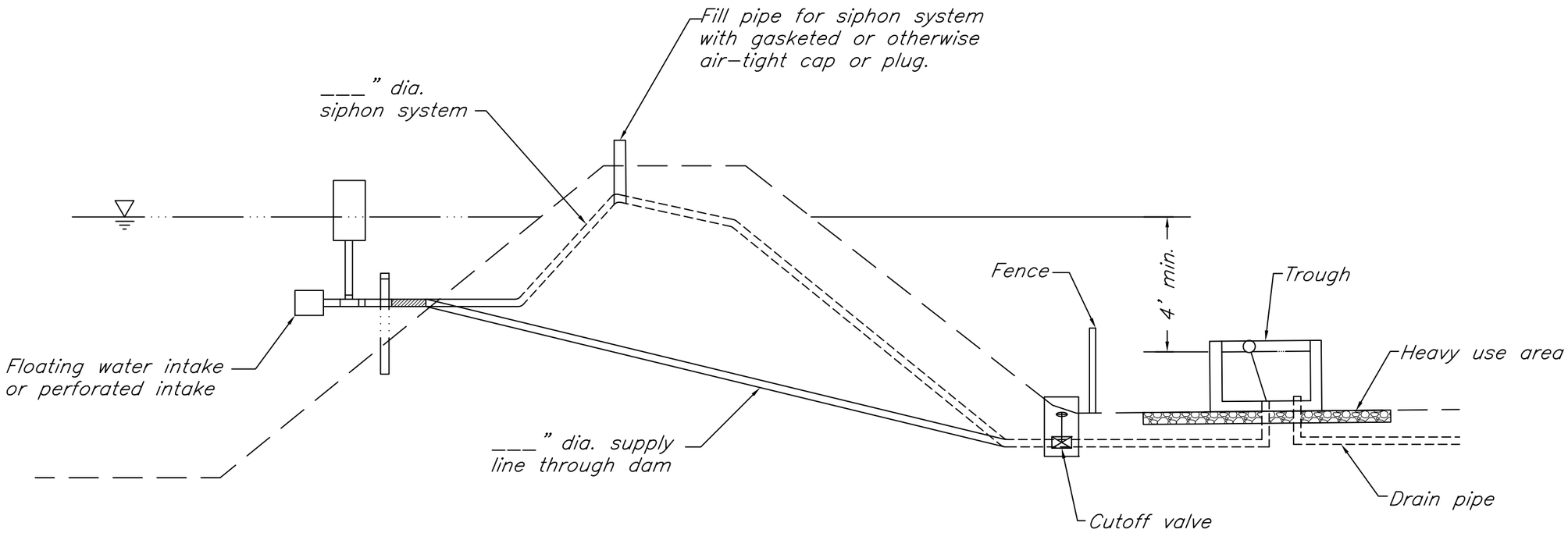

PROFILE

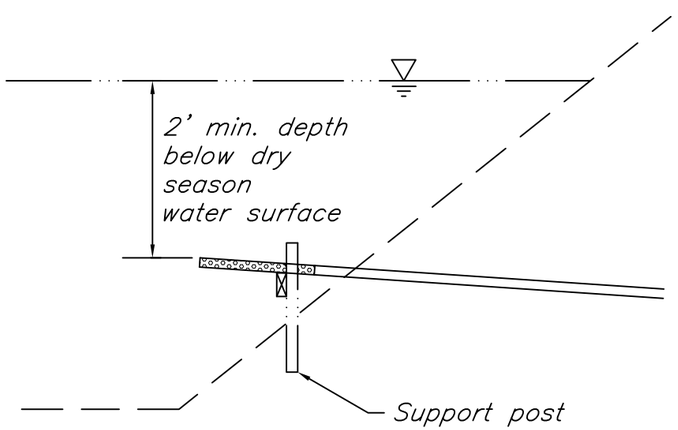

PERFORATED INTAKE

Intake to have 1/2" dia. holes evenly spaced, 12 per foot, along 4 foot end of intake pipe. Pipe to have end caps.

NOTES:

1. Water supply line may be a siphon or non-siphon configuration.
2. See attached drawings for details of trough and heavy-use area.
3. See attached drawings for details of floating water intake, if used.
4. Use drainage diaphragm for all pipes through embankments.

Date
Designed
Drawn
Checked
Approved

LIVESTOCK WATERING WITH NO ACCESS TO POND
LANDOWNER
COUNTY, ALABAMA

NRCS
Natural Resources Conservation Service
United States Department of Agriculture

Rev. 5/13

Drawing No.
AL-ENG-516-02

Sheet 2 of 2