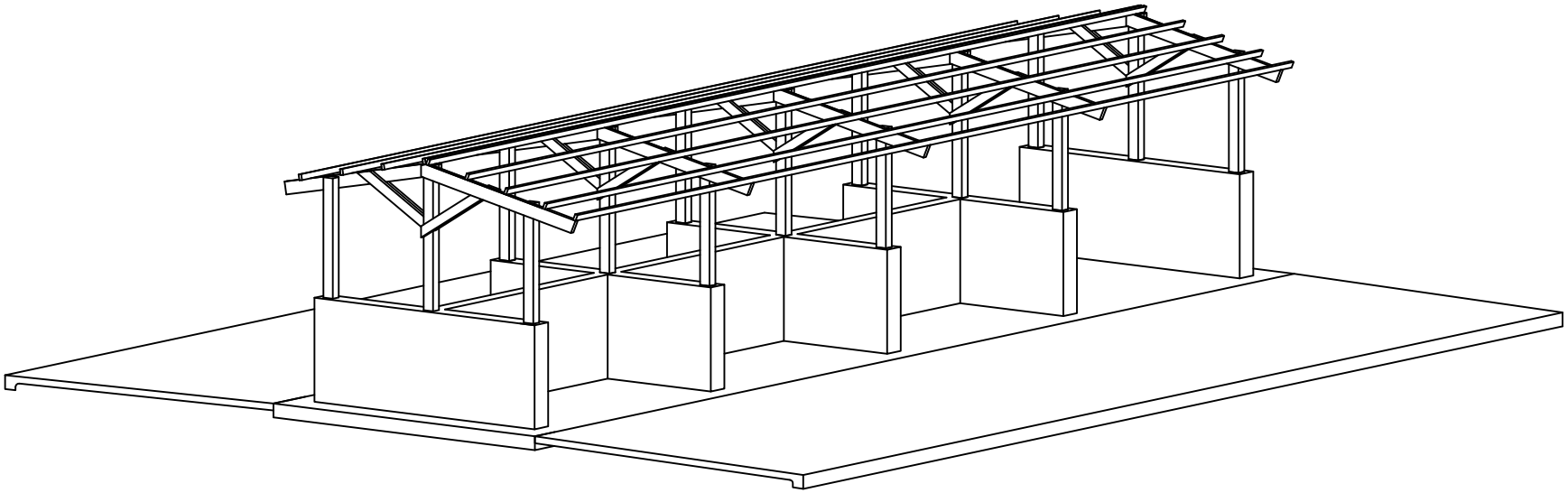

NOTE:

1. This plan set shows details for a three (3) Primary Bin unit. The plan set is to be adapted for _____ Primary Bins and _____ Storage Bins. See sheet 6 of 6 for estimated quantities.
2. Each Primary Bin shall have a gate. For clarity no gates or roofing material is shown.

The following Construction Specifications are incorporated by reference:

AR–21 Excavation
AR–23C Earthfill Class C
AR–31 Concrete for Major Structures
AR–32 Structure Concrete
AR–34 Steel Reinforcement
AR–81 Metal Fabrication
AR–83 Timber Fabrication

*The full text of the Construction Specifications can be found on the web at http://www.ar.nrcs.usda.gov/technical/engineering_construction_specs.html

Know what's **below.**
Call before you dig.

I certify that the composter was built according to this set of drawings:

_____
Contractor/Landowner

This composter meets NRCS Standards and Specifications

_____
NRCS Representative

Standard Drawing
AR–ENG–417

Date
Designed
Drawn
Checked
Approved

MORTALITY COMPOST FACILITY

10' Wide Concrete Bins

Customer:_____

USDA NRCS
United States Department of Agriculture
Natural Resources Conservation Service

File No.

Drawing No.
AR–ENG–417

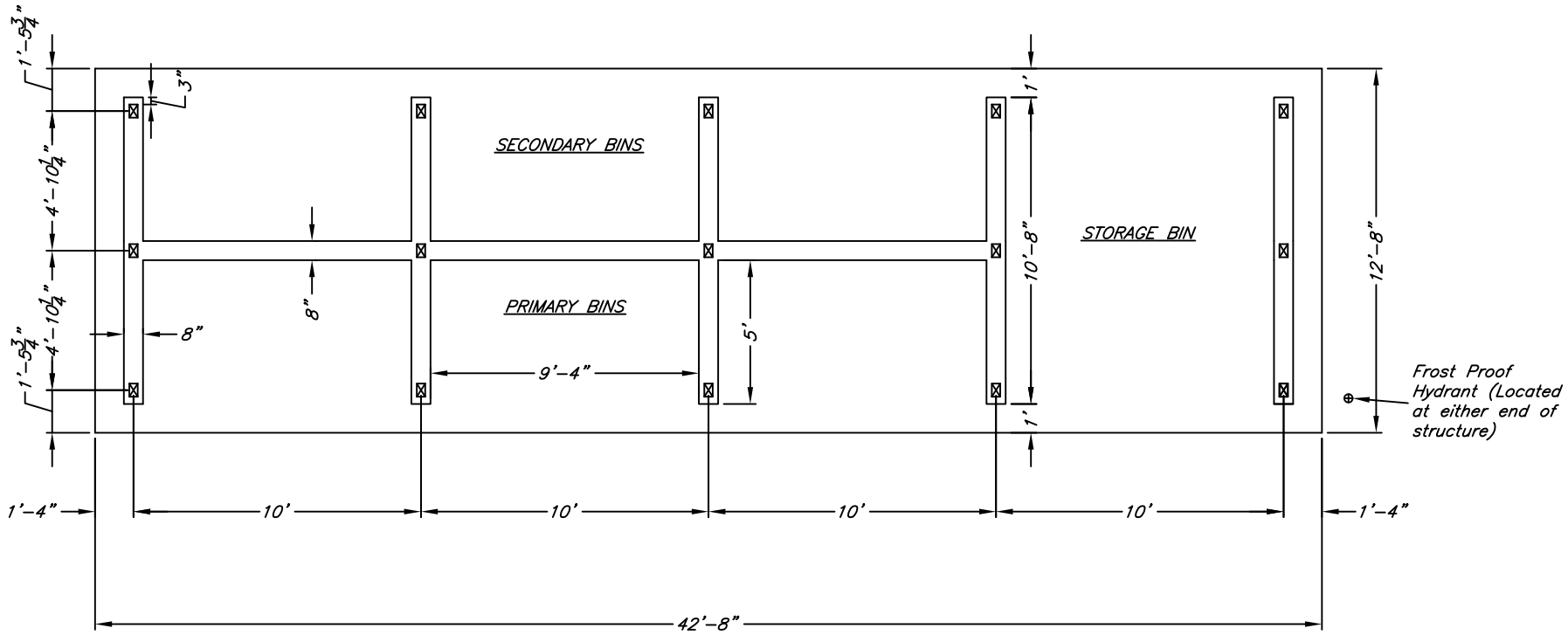

NOTES:

1. Posts are to be treated (0.4 lbs. per cu. ft.). All lumber is to be #2 Southern Yellow Pine.
2. Attach each purlin to each rafter with a manufactured framing anchor. Where purlin joints are needed, they are to overlap 18" above a rafter.
3. Roofing material is to be attached to each purlin using fasteners and fastener spacing recommended by the roofing manufacturer. The contractor shall provide a copy of the manufacturers fastening recommendations prior to final inspection.
4. Frost-proof hydrant is required UNLESS there is an alternative water source (such as a hydrant) available within 150'.
5. Concrete for walls and floor is to be in accordance with Construction Specification AR-31 Concrete for Major Structures.
6. Concrete for apron is to be in accordance with Construction Specification AR-32 Concrete for Minor Structures.

Date

Designed

Drawn

Checked

Approved

MORTALITY COMPOST FACILITY

10' Wide Concrete Bins

Customer:

USDA NRCS

United States Department of Agriculture

Natural Resources Conservation Service

File No.

Drawing No.

AR-ENG-417

Sheet 2 of 7

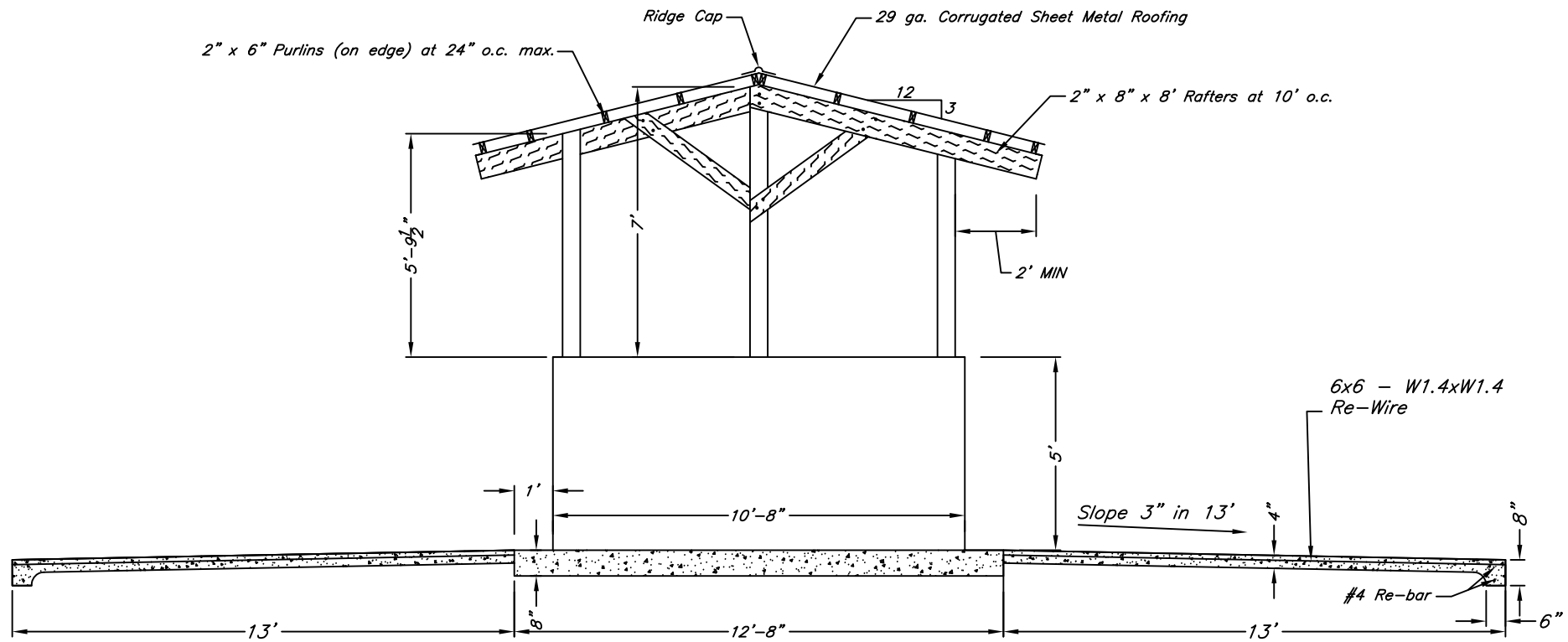

END VIEW

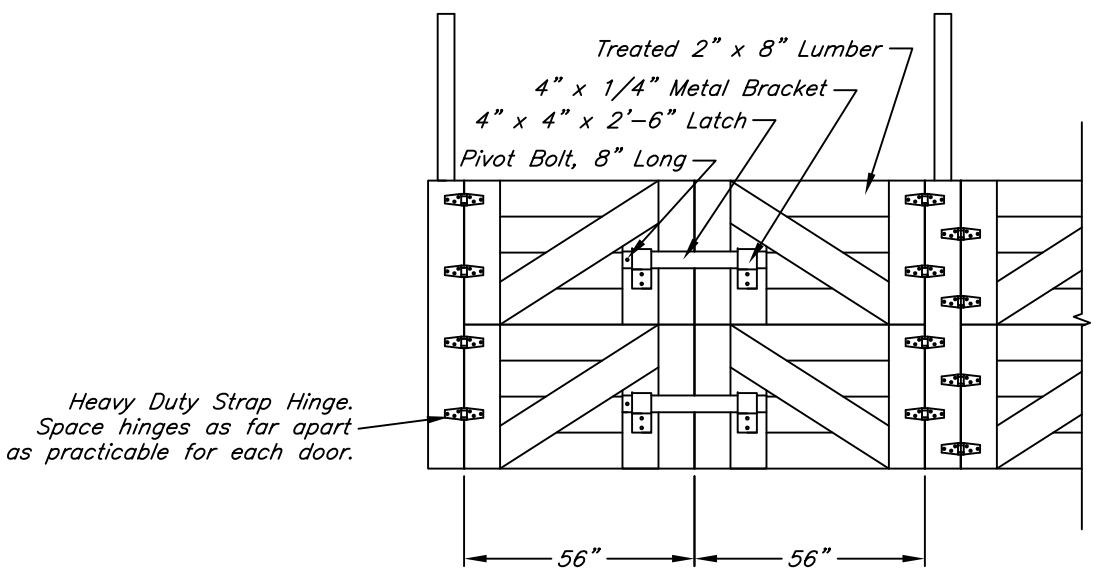

GATE DETAIL

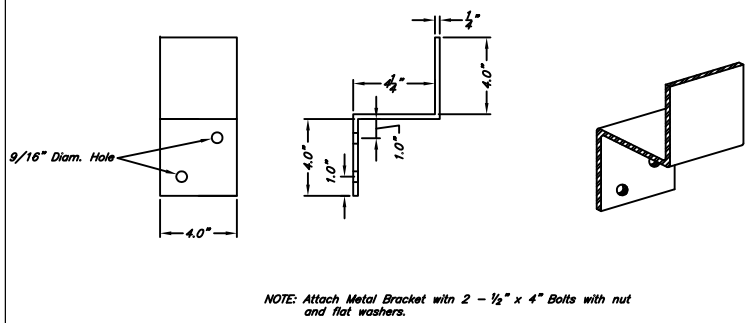

NOTE: Attach Metal Bracket with 2 – ½" x 4" Bolts with nut and flat washers.

METAL BRACKET DETAIL

Date

Designed

Drawn

Checked

Approved

MORTALITY COMPOST FACILITY

10' Wide Concrete Bins

Customer:

USDA NRCS

United States Department of Agriculture

Natural Resources Conservation Service

File No.

Drawing No.

AR-ENG-417

Sheet 3 of 7

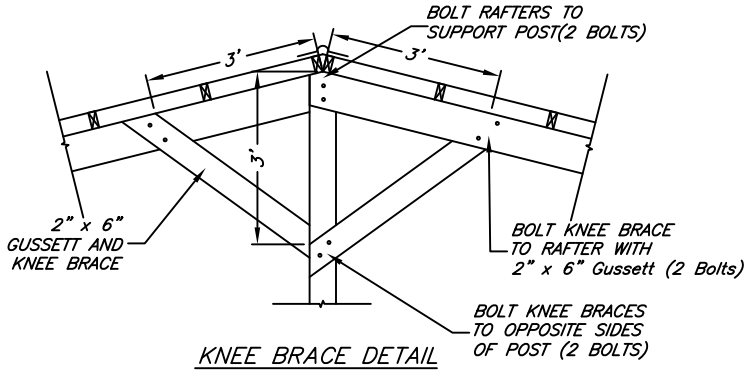

KNEE BRACE DETAIL

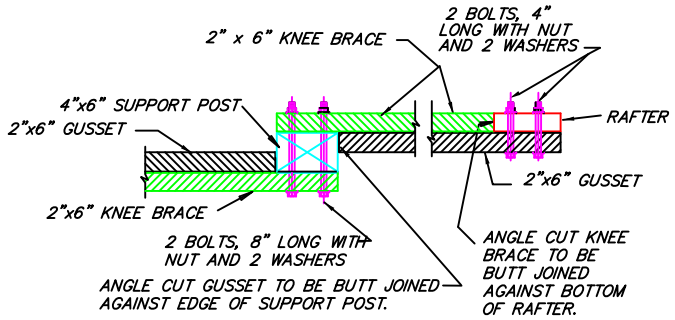

PLAN VIEW – KNEE BRACE

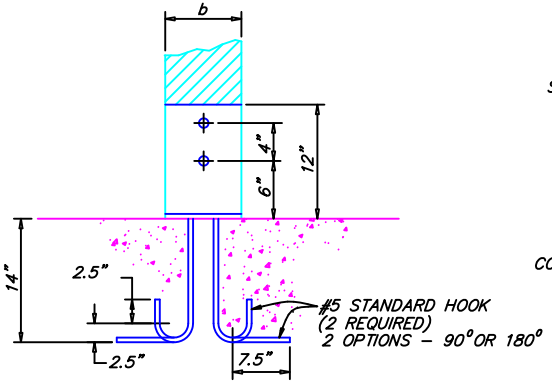

SIDE VIEW

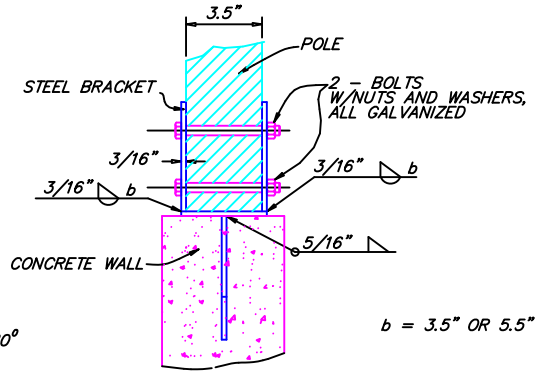

CROSS SECTION

b = 3.5" OR 5.5"

NOT TO SCALE

ANCHORAGE AT BASE OF POLES

(A COMMERCIAL EMBEDMENT ANCHOR MAY BE USED WITH PRIOR APPROVAL FROM THE ENGINEER.)

NOTES:

1. ALL BOLTS SHALL BE 5/8" DIAMETER WITH WASHERS AT BOTH ENDS.
2. ALL 16d NAILS SHALL BE RING SHANKED.
3. NAIL GUSSET AND KNEE BRACE TOGETHER.
4. PAINT BRACKET WITH 2 COATS OF ZINC-RICH GALVANIZING PAINT.
5. FABRICATE AND INSTALL BRACKET TO FIT TIGHTLY AGAINST POLE.
6. NUTS MUST BE KEPT SNUG THROUGHOUT THE LIFE OF THE STRUCTURE OR SERIOUS DAMANGE COULD RESULT.

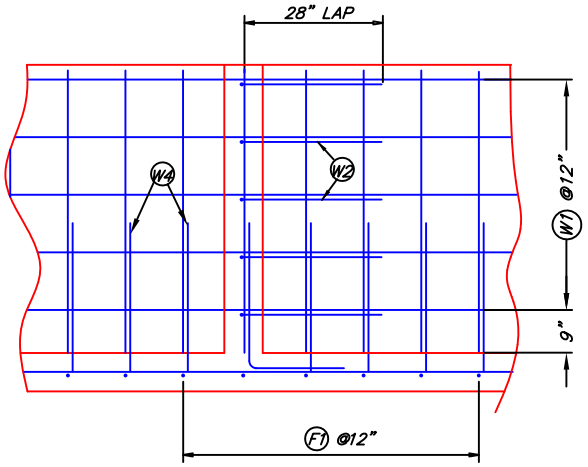

END WALL STEEL (ELEV. VIEW)

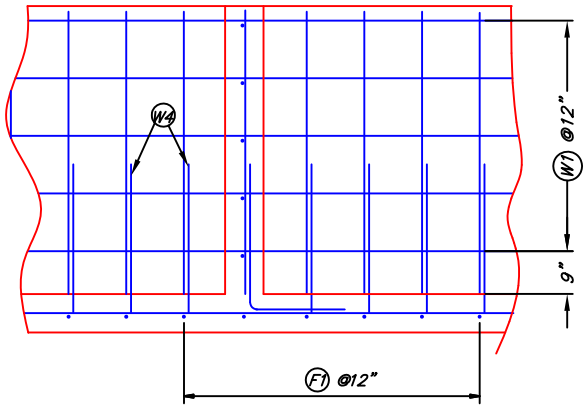

INTERIOR BIN SIDEWALLS STEEL (ELEV. VIEW)

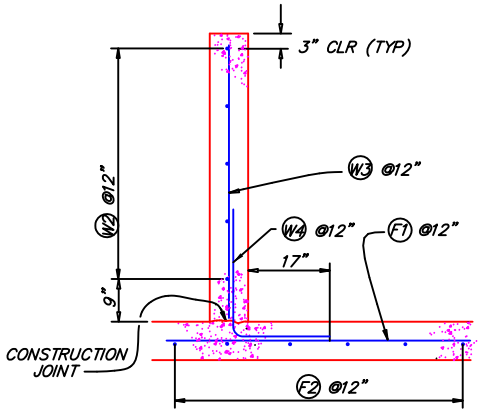

TYPICAL SECTION OF WALL

Date

Designed

Drawn

Checked

Approved

MORTALITY COMPOST FACILITY

10' Wide Concrete Bins

Customer: _____

USDA NRCS

United States Department of Agriculture

Natural Resources Conservation Service

File No.

Drawing No. AR-ENG-417

Sheet 4 of 7

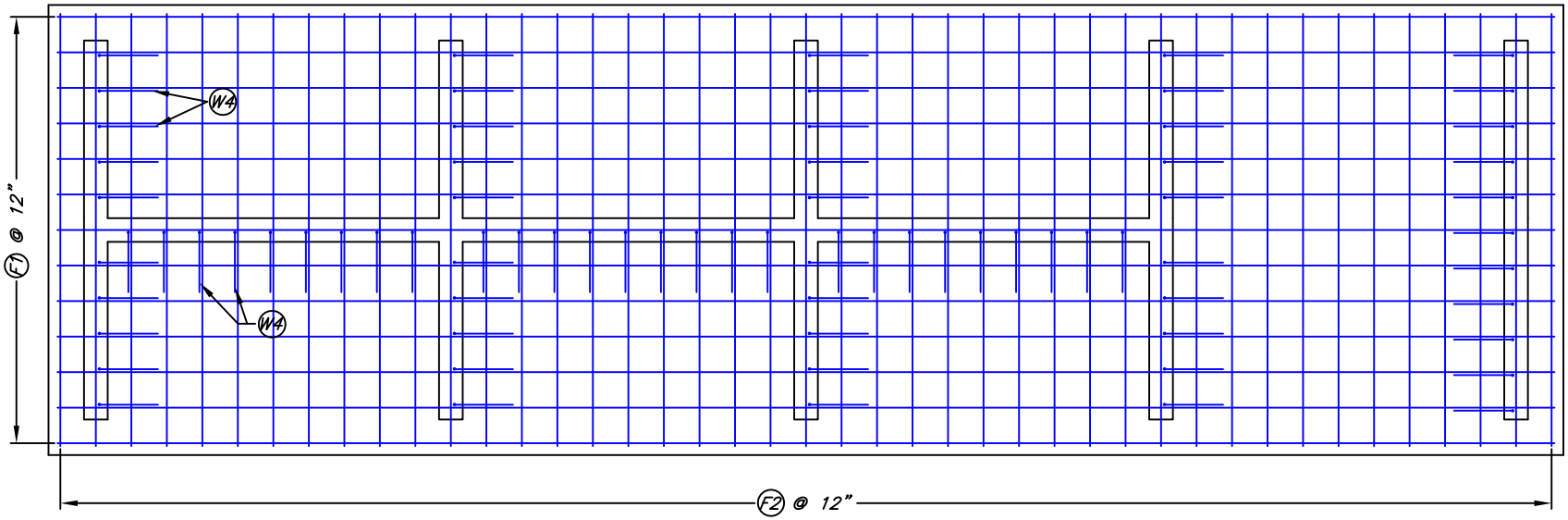

PLAN VIEW OF FLOOR SLAB STEEL

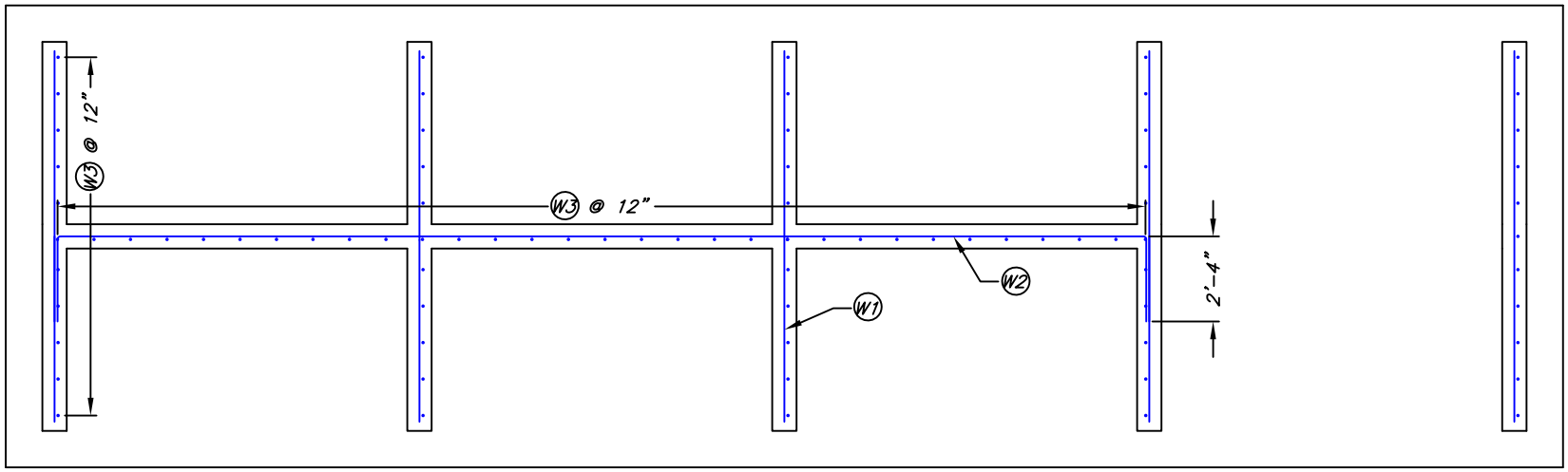

PLAN VIEW OF WALL STEEL

Date

Designed

Drawn

Checked

Approved

MORTALITY COMPOST FACILITY

10' Wide Concrete Bins

Customer:_____

USDA NRCS

United States Department of Agriculture

Natural Resources Conservation Service

File No.

Drawing No.

AR-ENG-417

Sheet 5 of 7

STEEL SCHEDULE (WITH STORAGE BIN)							
MARK	SIZE	QUANTITY	LENGTH	TYPE	B	C	TOTAL LENGTH
F1	5	13	a	1	---	---	b
F2	5	c	12' – 2"	1	---	---	d
W1	4	e	10' – 2"	1	---	---	f
W2	4	5	g	21	2'–4"	h	i
W3	5	j	4' – 9"	1	---	---	k
W4	5	l	4' – 4"	21	1' – 9"	2' – 7"	m

No. of Primary Bins								
	2	3	4	5	6	7	8	PER ADDITITIONAL BIN
a	32' – 2"	42' – 2"	52' – 2"	62' – 2"	72' – 2"	82' – 2"	92' – 2"	10'
b	418' – 2"	548' – 2"	678' – 2"	808' – 2"	938' – 2"	1068' – 2"	1198' – 2"	130'
c	33	43	53	63	73	83	93	10
d	401' – 6"	523' – 2"	644' – 10"	766' – 6"	888' – 2"	1009' – 10"	1131' – 6"	121' – 8"
e	20	25	30	35	40	45	50	5
f	203' – 4"	254' – 2"	305'	355' – 10"	406' – 8"	457' – 6"	508' – 4"	50' – 10"
g	24' – 8"	34' – 8"	44' – 8"	54' – 8"	64' – 8"	74' – 8"	84' – 8"	10'
h	20'	30'	40'	50'	60'	70'	80'	10'
i	123' – 4"	173' – 4"	223' – 4"	273' – 4"	323' – 4"	373' – 4"	423' – 4"	50'
j	62	82	102	122	142	162	182	20
k	294' –6"	389' – 6"	484' – 6"	579' – 6"	674' – 6"	769' – 6"	864' – 6"	95
l	59	78	97	116	135	154	173	19
m	255' – 8"	338'	420' – 4"	502' – 8"	585'	667' – 4"	749' – 8"	82' –4"

Date

Designed

Drawn

Checked

Approved

MORTALITY COMPOST FACILITY

10' Wide Concrete Bins

Customer:_____

USDA NRCS

United States Department of Agriculture

Natural Resources Conservation Service

File No.

Drawing No.

AR-ENG-417

Sheet 6 of 7

Number of Primary Bins (quantities w/o storage area)								
	2	3	4	5	6	7	8	Additional Bins
Length	22'–8"	32'–8"	42'–8"	52'–8"	62'–8"	72'–8"	82'–8"	10'
CONCRETE								
Bin Walls and Floor, cu.yd.	13.4	19	24.6	30.2	35.8	41.4	47	5.6
Apron, cu.yd.	7.6	11	14.4	17.8	21.2	24.6	28	3.4
CONCRETE REINFORCEMENT								
6X6–W1.4xW1.4 wire mesh, sq.ft.	589.4	849.4	1109.4	1369.4	1629.4	1889.4	2149.4	260
Reinforcing Bars (see steel schedule)								
TREATED LUMBER								
POSTS								
4"x6"x 5'–10"	6	8	10	12	14	16	18	2
4"x6"x 7'–0"	3	4	5	6	7	8	9	1
DOORS								
2"x8"x 10'	24	36	48	60	72	84	96	12
2"x8"x 5'	4	6	8	10	12	14	16	2
4"x4"x 2'–6"	2	3	4	5	6	7	8	1
NON–TREATED LUMBER								
2"x8"x 8'	6	8	10	12	14	16	18	2
2"x6"x 4'	6	8	10	12	14	16	18	2
2"x6"x 3'–9"	6	8	10	12	14	16	18	2
PURLINS								
2"x6"x 12'	30	40	50	60	70	80	90	10
ROOFING MATERIAL – sq.ft	346	499	652	805	958	1111	1264	153
BOLTS – 5/8" Diam.								
4" Length	12	16	20	24	28	32	36	4
8" Length	12	16	20	24	28	32	36	4
Washers – 5/8" Diam.	48	64	80	96	112	128	144	16
Framing Anchors (Purlins)	30	40	50	60	70	80	90	10
Post Anchors	9	12	15	18	21	24	27	3
5/8" x 4" Galvanized Bolts w/washers	18	24	30	36	42	48	54	6
Concrete Anchor Bolts	18	24	30	36	42	48	54	6
4" Heavy Duty Strap Hinge	16	24	32	40	48	56	64	8
4"x 1/4" Metal Bracket	8	12	16	20	24	28	32	4
1/2" x 4" Bolts	16	24	32	40	48	56	64	8
1/2" x 8" Bolts	4	6	8	10	12	14	16	2

Number of Primary Bins (quantities with storage area)								
	2	3	4	5	6	7	8	Additional Bins
Length	32'–8"	42'–8"	52'–8"	62'–8"	72'–8"	82'–8"	92'–8"	10'
CONCRETE								
Bin Walls and Floor, cu.yd.	17.9	23.5	29.1	34.7	40.1	45.7	51.3	5.6
Apron, cu.yd.	11	14.4	17.8	21.2	24.6	28	31.4	3.4
CONCRETE REINFORCEMENT								
6X6–W1.4xW1.4 wire mesh, sq.ft.	849.4	1109.4	1369.4	1629.4	1889.4	2149.4	2409.4	260
Reinforcing Bars (see steel schedule)								
TREATED LUMBER								
POSTS								
4"x6"x 5'–10"	8	10	12	14	16	18	20	2
4"x6"x 7'–0"	4	5	6	7	8	9	10	1
DOORS								
2"x8"x 10'	24	36	48	60	72	84	96	12
2"x8"x 5'	4	6	8	10	12	14	16	2
4"x4"x 2'–6"	2	3	4	5	6	7	8	1
NON–TREATED LUMBER								
2"x8"x 8'	8	10	12	14	16	18	20	2
2"x6"x 4'	8	10	12	14	16	18	20	2
2"x6"x 3'–9"	8	10	12	14	16	18	20	2
PURLINS								
2"x6"x 12'	40	50	60	70	80	90	100	10
ROOFING MATERIAL – sq.ft	499	652	805	958	1111	1264	1417	153
BOLTS – 5/8" Diam.								
4" Length	16	20	24	28	32	36	40	4
8" Length	16	20	24	28	32	36	40	4
Washers – 5/8" Diam.	64	80	96	112	128	144	160	16
Framing Anchors (Purlins)	40	50	60	70	80	90	100	10
Post Anchors	12	15	18	21	24	27	30	3
5/8" x 4" Galvanized Bolts w/washers	24	30	36	42	48	54	60	6
Concrete Anchor Bolts	18	24	30	36	42	48	54	6
4" Heavy Duty Strap Hinge	16	24	32	40	48	56	64	8
4"x 1/4" Metal Bracket	8	12	16	20	24	28	32	4
1/2" x 4" Bolts	16	24	32	40	48	56	64	8
1/2" x 8" Bolts	4	6	8	10	12	14	16	2

Date

Designed

Drawn

Checked

Approved

MORTALITY COMPOST FACILITY

10' Wide Concrete Bins

Customer:_____

USDA NRCS

United States Department of Agriculture

Natural Resources Conservation Service

File No.

Drawing No.

AR–ENG–417