See Arizona Tech Note, AZ-9-2 Biology, "Watering Facility Escape Ladder Design" for minimum design criteria.

Notes:

1. Set swing joint of trough supply line so that pipe can be swung flat on floor to drain tank. Dimensions optional to suit specific installation.
2. Close return bend can also be a single piece 180° bend.
3. Perforations will be equally spaced 3" along length, 4 perforations per row.
4. All steel rim troughs and storage tanks up to 40-feet in diameter and 8-feet in height shall have a minimum 12 ga. thickness.
5. The system is not designed to be operated in freezing weather. System shall be drained prior to freezing weather.
6. All disturbed areas shall be smoothed and seeded with a recommended seeding mix after construction.
7. Storage tanks with covered tops shall have an 18-inch diameter (minimum) access manhole installed in the top and will have a drain and an overflow pipe (if applicable).
8. All above ground inlet and outlet pipes that are exposed to sunlight, livestock, or freezing shall be new galvanized steel or copper pipe of adequate size to deliver the needed quantity of water. HDPE pipe may be used for the overflow. All valves shall be brass and of the correct size. All new tanks, troughs, piping and appurtenances shall be National Sanitary Foundation (NSF) approved.

Table A

Rim Diameter (Feet)	Floor Area (sq ft)	Minimum steel reinforcement
Under 20 ft	0 – 320	No. 4 rebar on 10.5" centers
20 ft – 30 ft	320 – 710	No. 4 rebar on 8" centers
30 ft– 40 ft	710 – 1260	No. 4 rebar on 6.5" centers
Over 40 ft	1260 –	No. 4 rebar on 5.5" centers

Table B

Tanks up to 8' in Height	Bolt ⅜"	Rivet, ⅜"	Rivet, ½"
Rim Diameter (Feet)	Fastener per foot	Fastener per foot	Fastener per foot
6–24	9	9	9
26–38	13.5	13.5	9

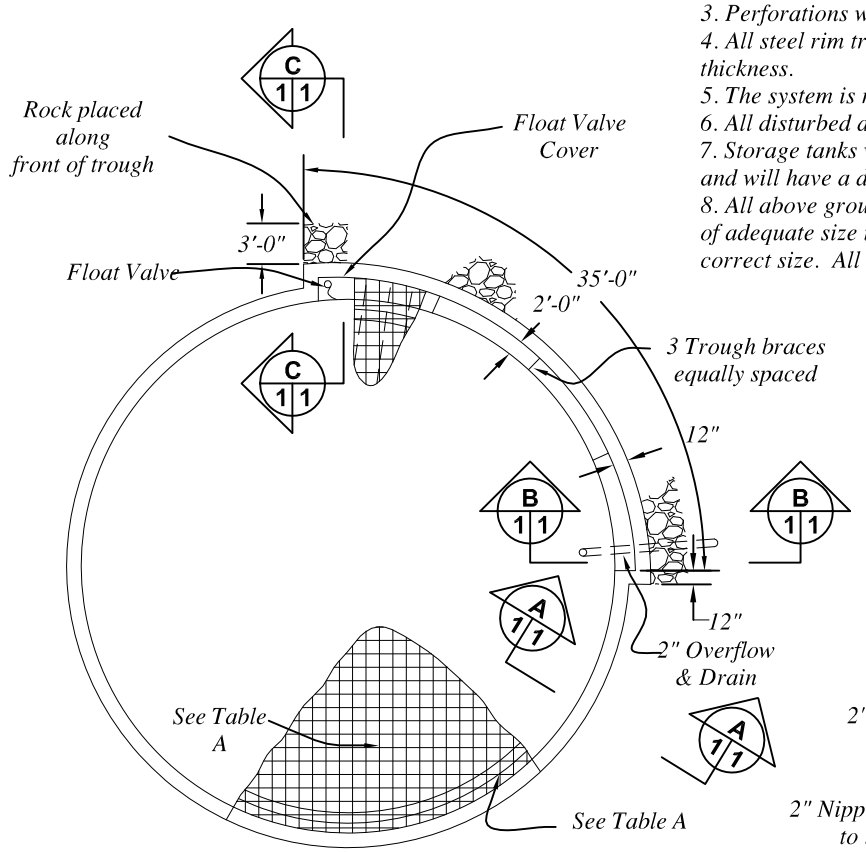

Plan

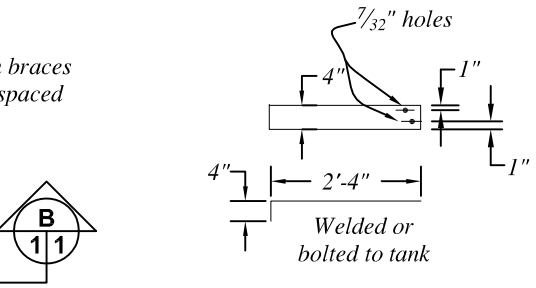

Detail Trough Brace

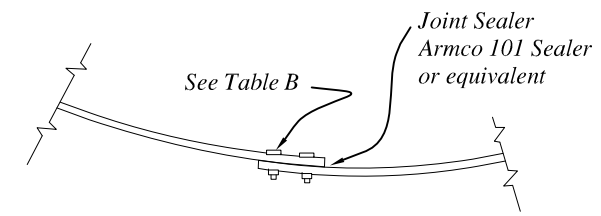

Plan View

N.T.S

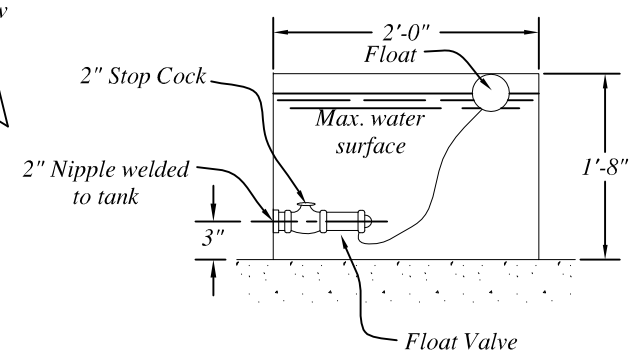

Section C 1 1

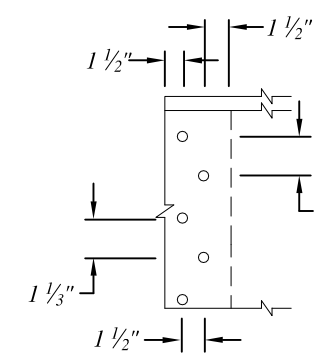

9 Bolts/ ft

N.T.S

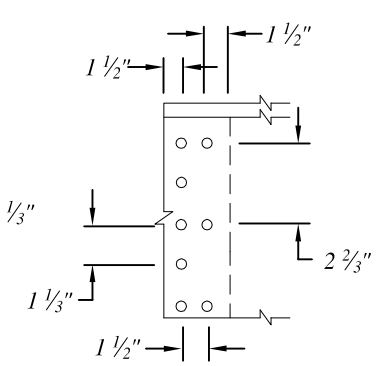

13.5 Bolts/ ft

N.T.S

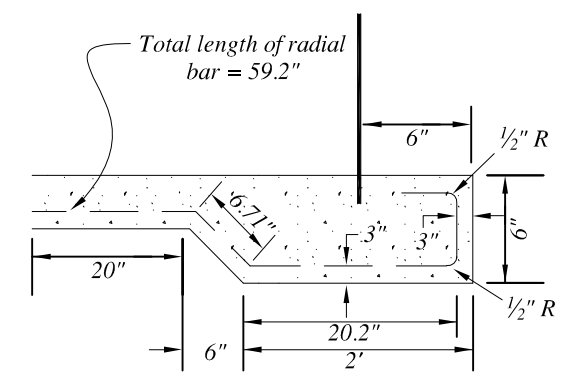

Detail Radial Bars (tank without trough)

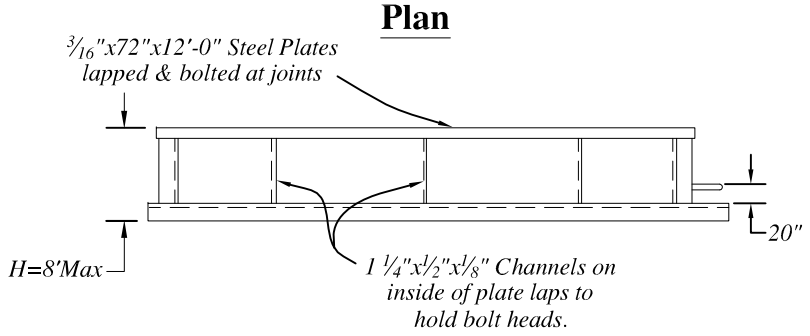

Elevation

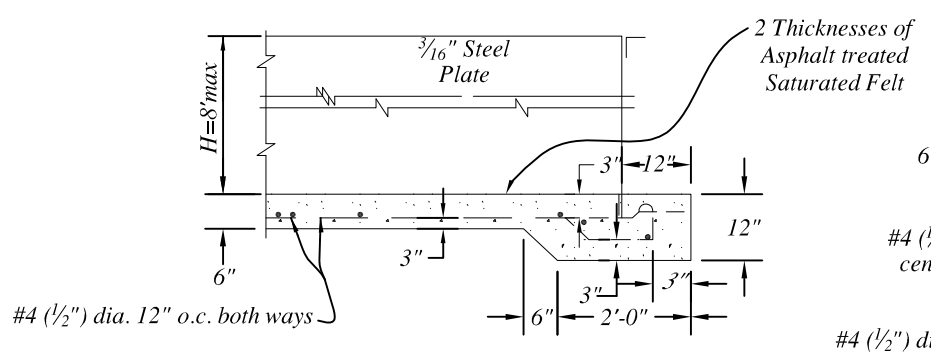

Section A 1 1

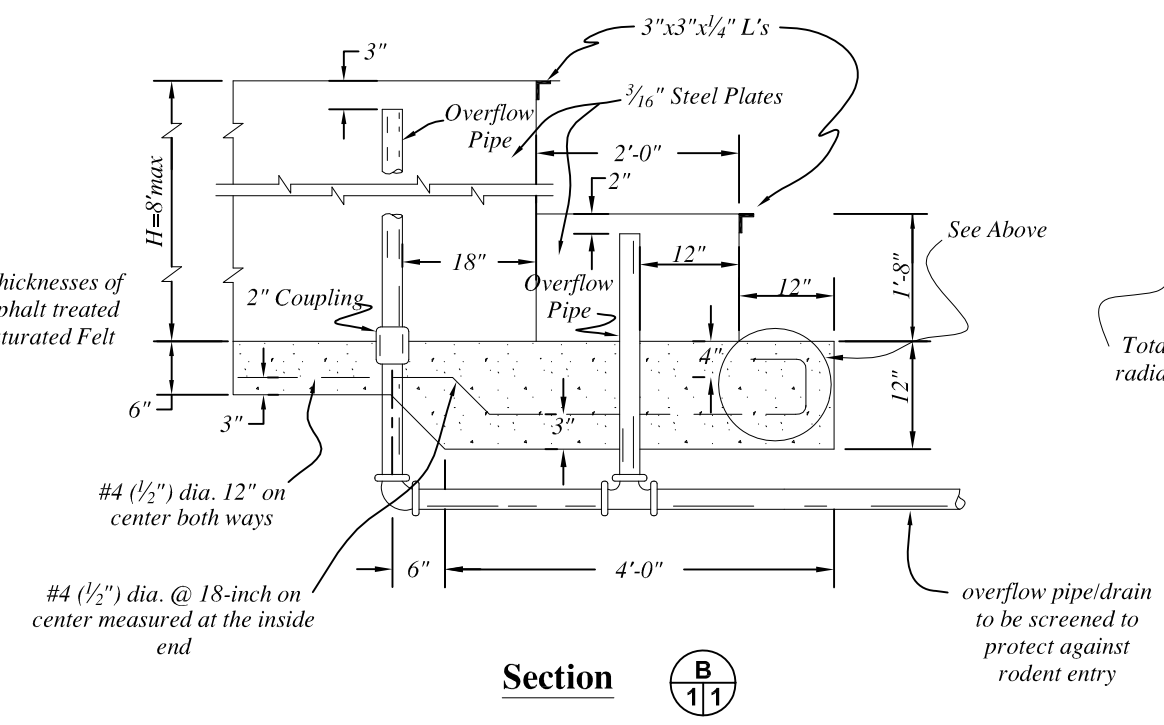

Section B 1 1

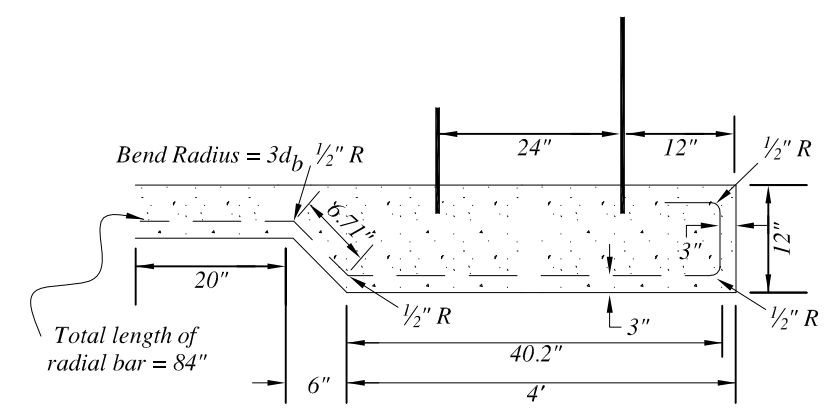

Detail Radial Bars (tank with trough)

REVISIONS			
DATE	APPROVED	TITLE	JAA

Date
Designed
Drawn
Checked
Approved

Arizona Drawing Template
Steel Rim Storage Tank + Trough – 614A2

Field Office *County, Arizona*

NRCS
Natural Resources Conservation Service
United States Department of Agriculture

Drawing No.
AZ614A2_10_03

Sheet of