TECHNICAL NOTES

U.S. Department of Agriculture **Natural Resources Conservation Service**

TN – SOILS - CA - 22 November, 2015

TRANSMIT PROVISIONAL ECOLOGICAL SITE KEY: MLRA 16 (The Delta)

Purpose: Deliver provisional ecological site key for MRLA 16 and explain parameters of the recently approved provisional ESDs for MLRA 16

Introduction

At the end of FY 2015, five initial ecological site descriptions (ESDs) were prepared for MLRA 16 following the parameters set forth in the 2015 National Instruction 430-306, Ecological Site Inventory and Ecological Site Description. This approach requires an MLRA-wide series of ESDs to be developed in a truncated format and facilitates the completed documentation of core landscape concepts for all MLRAs in all states over a period of five years.

Four major component requirements of provisional ESDs (pESDs) were included under the national instruction:

1) A documented ecological site concept;
2) A two-part state-and-transition model (STM), diagram and narrative explanation;
3) The correlation between the ecological site concept and the map unit components of concern;
4) An ecological site key for all identified ecological sites within the MRLA

MLRA 16 (Figure 1) was targeted for pESD development in April, 2015 to test a process which could be used where no ecological site descriptions have been developed in the past. The Soil Science Division developed the MLRA-specific process and collaborated with the California State Soil Scientist staff to produce these products. ESDs are officially housed in the Ecological Site Information System (ESIS).

This MLRA is comprised of some of the most productive soils in the state and has been largely hydrologically transformed by constructed levees and water management to support agriculture production in the immediate area as well as dams and levees constructed in the feeding watersheds. Characteristic of the MRLA is soil development processes arising from the influence of riverine hydrology as modified by tidal hydrology. The relative function of hydrology of each ecological site is discussed in the documents but there is no substitute for a site-specific inventory and thorough collaborative investigation.

Prepared by Jon Gustafson, State Rangeland Ecologist, State Soil Science Section, Natural Resources Conservation Service, Davis, California.

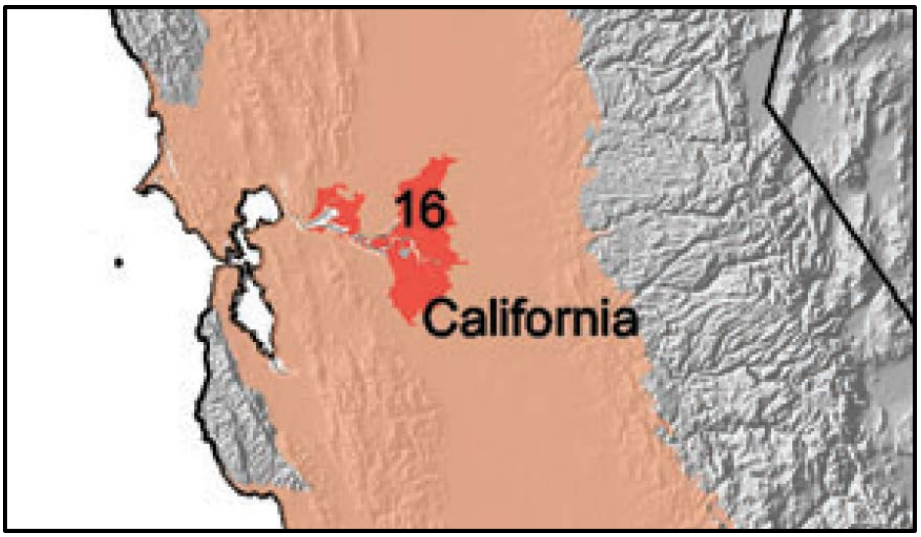

Figure 1. MLRA 16 General Location

One of the early decisions made was to divide the MLRA into two conceptual land resource units (LRUs) (Figure 2). The larger eastern portion of the MLRA which is the core concept of the MLRA is most influenced by river hydrology and least influence of tide water salts is referred to here as 16XA.

Figure 2. Applicable area for the ecological site key for MLRA 16 (Approximate locations: LRU A is east of the red vertical line and LRU B is to the west)

Ecological Sites of MLRA 16

The western portion of the MRLA is referred to here as 16XB and is geographically tied to the greater Suisun Bay area which is more influenced by tidal water salts and somewhat less influenced by river hydrology.

While the ecological site descriptions for MLRA 16 are in provisional status, it is important to consider the context of these documents. "Provisional" is exactly what it sounds like, a starting point leading to refinement and enhancement prior to full approval. These pESDs do not contain a wealth of vegetation data nor were they intended to do so. Instead, what we have with pESDs is a basic series of hypotheses which invite testing by NRCS planners and partners. Most conservation planning efforts will not rely on these documents except during initial consideration of the planning environment and complicated projects such as restoration would be much better served by relying on a complete inventory and a more comprehensive understanding of project site hydrology in particular.

A fundamental goal of an ecological site concept is matching the soil map unit component(s) to a single vegetation potential profile. There can be many map unit components assigned/correlated to a single vegetation potential or just one soil map unit component to a single vegetation potential but never a single map unit component to more than one ecological site. The ecological site concept serves as a comprehensive blueprint for the ecological site description as defined by the abiotic factors which drive the ecological dynamics of the ecological site.

Two main groups of ecological sites within MLRA 16 could be considered Type I) predominantly organic soils, or Type II) other non-organic soils. Both types occur in both LRUs but have somewhat different attributes which become apparent when using the key. Type I includes younger soil profiles within the MLRA which have accumulated organic material over the past ~7,000 years and are conceptually best represented by Histosols but also include some Mollisols; these Mollisols may have previously been organic but at the time the soils were mapped and described did not reflect the classification requirements at that time. Type II sites are accordingly those which likely would not have naturally evolved into organic soils based on the available evidence. Over half of the MLRA consists of just one ecological site, 016XA001, occupying the eastern Delta and made up of predominantly organic soils (Type I).

Provisional Ecological Sites and Approximate Proportions

ESD ID	**ESD Name**	**Proportion of MLRA**	**Proportion of LRU**
R016XA001CA	Tidally-Influenced, Freshwater Sites	54%	63%
R016XA002CA	Freshwater, Stratified, Fluventic Sites	8%	9%
R016XA004CA	Island Sandhills	1%	1%
R016XB001CA	Tidally-Influenced, Salt-Affected Sites	12%	87%
R016XB002CA	Salt-Affected, Stratified, Fluventic Sites	2%	13%

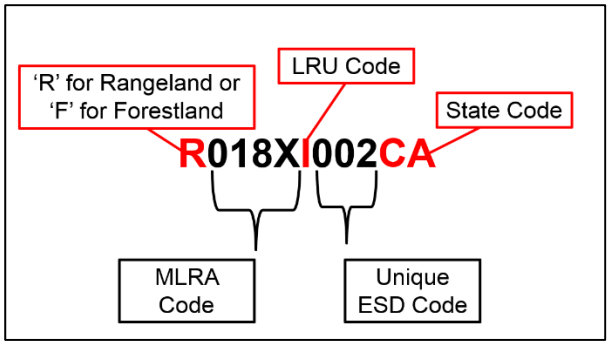

At least two other ecological sites occur within the MLRA polygon (~23% of the polygon) but which are better described as being correlated to soils of MLRA 17. These sites will be reexamined relative to the spatial distribution of the likely soils in conjunction with the development of pESDs for MLRA 17. This approach will ensure that the full range of variability of identified ecological sites are taken into account and thereby result in a more consistent conservation planning tool of improved scientific defensibility.

Notes on the MLRA 16 Provisional Ecological Site Key

The ecological site key breaks first on the LRU concept but the user should compare similar sites as noted in the ESD to assess consistency between the ecological site concept and the site under consideration. The key itself is an artificial classification of absolutes while the MRLA is hydrologically complex with fluctuating water salinity.

All ecological site keys should be considered works in progress. The user can fulfill a critical role by providing useful feedback on how the keys work and areas of the key requiring update. The goal for the key is that the user should be able to accurately arrive at the correct ecological site within the key at least 80% without rekeying the site attributes. This assumes that the user has enough information to administer the key and that the conditions of the key can be readily applied in the field. Once the criteria for sorting ecological sites are well understood through field applications, the field expert advances in ability and the key becomes a secondary document of consideration.

For this particular key, the primary resources/tools needed for sorting out ecological sites will be an applicable soils map and map unit component descriptions, a location map and a shovel. As an alternative to hard copy soils information, the SoilWeb app can provide truncated soils information for smart phone users.

Users of the key are encouraged to use the feedback form noted below to encourage the continued improvement of the key. Comments regarding the ESDs proper should be directed to the specific author(s) of the ESD.

Comments regarding this technical note may be directed to the California State Soil Scientist.

Recommended Reading

Galloway, D., Jones, D. and Ingebristen, S.E., 2013. Land Subsidence in the United States. USGS Circular 1182.

Herbold, B., and P.B. MuyIe, 1989. The ecology of the Sacramento-San Joaquin Delta: a community profile. U.S. Fish and Wildlife. Sew. Biol. Rep.

Kneib R, Simenstad C, Nobriga M, Talley D. 2008. Tidal marsh conceptual model. Sacramento (CA): Delta Regional Ecosystem Restoration Implementation Plan.

Rogers, J. David, Storesund, Rune. 2011 "Geologic Setting of the Sacramento-San Joaquin Delta". NSF RESIN presentation, 116 slides.

Sands, A. 1977. Riparian Forests in California: Their Ecology and Conservation. Institute of Ecology, UC Davis and Davis Audubon Society, Pub. No. 15.

Thompson, John. 2006. "Early Reclamation and Abandonment of the Central Sacramento-San Joaquin Delta". Sacramento History Journal, Vol. VI, No. 1-4. 32 pp.

Whipple, A, Grossinger, RM, Rankin, D, Stanford, B, Askevold, RA. 2012. Sacramento-San Joaquin Delta Historical Ecology Investigation: Exploring Pattern and Process.

Browse light and detailed literature about ESDs at the Jornada Experimental Range's website for this purpose: http://jornada.nmsu.edu/esd