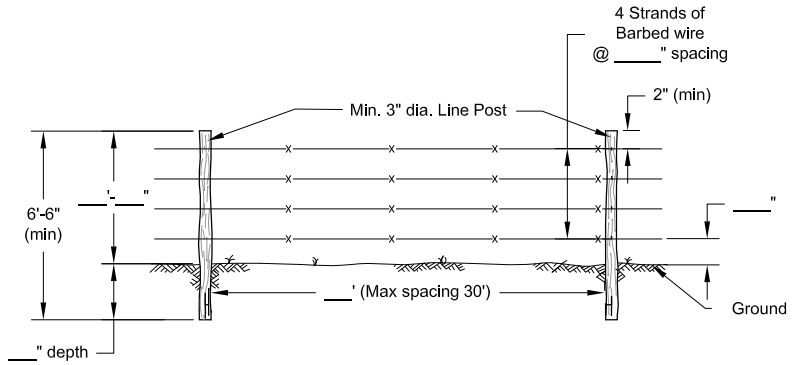

BARBED WIRE FENCE DETAIL W/ LINE POST

n.t.s.
(4 Strands)

Note:
Stays Not Shown
See Note 3.

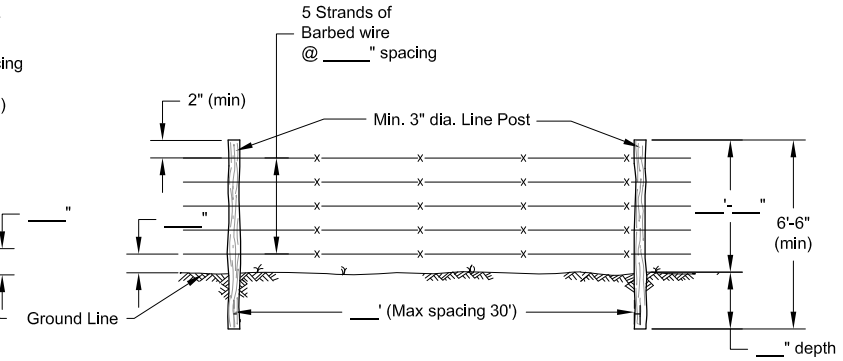

BARBED WIRE FENCE DETAIL W/ LINE POST

n.t.s.
(5 Strands)

Note:
Stays Not Shown
See Note 3.

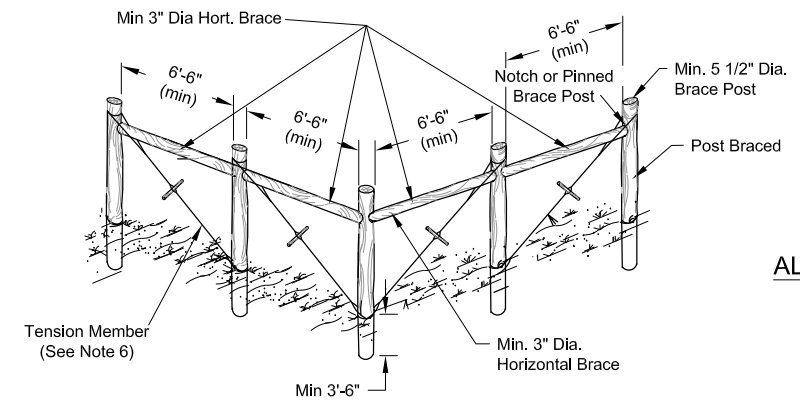

CORNER BRACE DETAIL

n.t.s.
(See Note 6)
Use two Double H when length to next brace exceeds 1320'
Use two Single H when length to next brace is less than 1320'

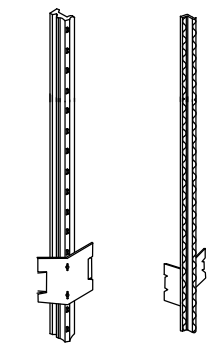

ALTERNATE LINE POSTS

n.t.s.
(See Note 7)

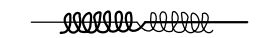

BARBED WIRE SPLICING DETAIL

n.t.s.

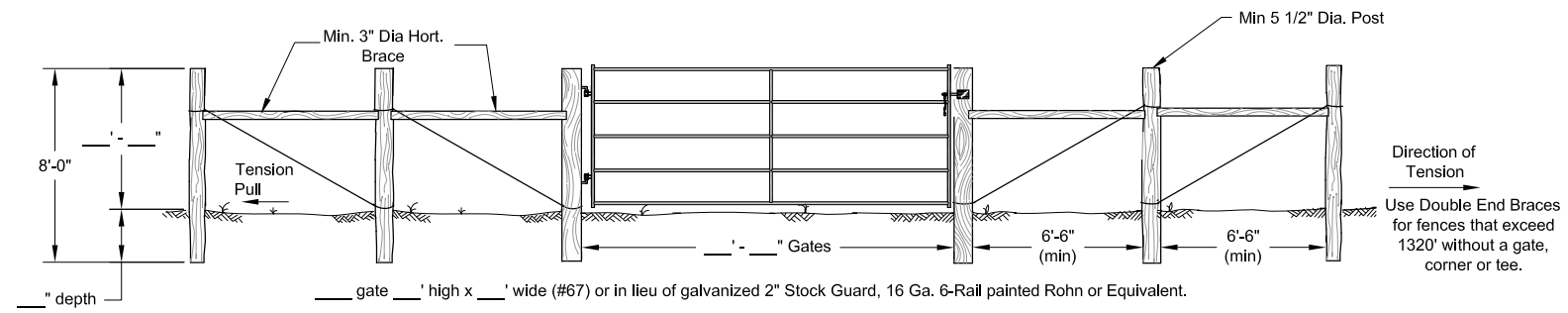

GATE PANEL DETAIL w/ DOUBLE END BRACE

n.t.s.

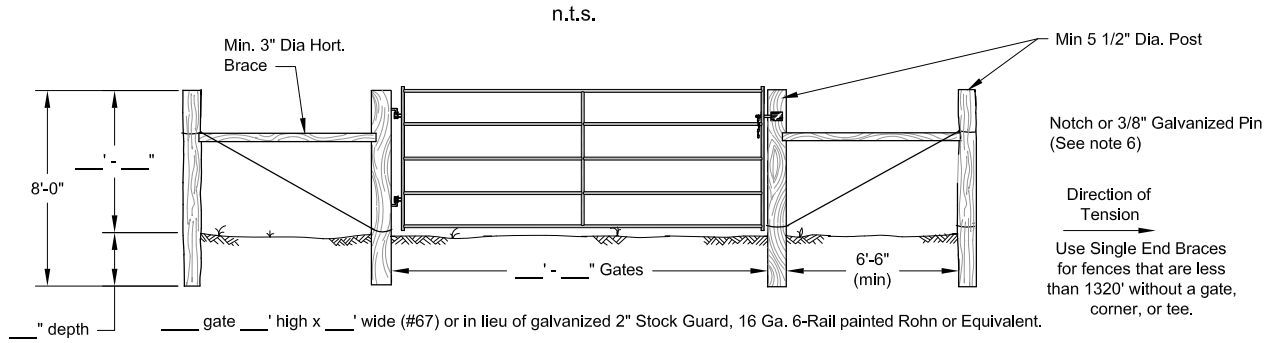

GATE PANEL DETAIL w/ SINGLE END BRACE

n.t.s.

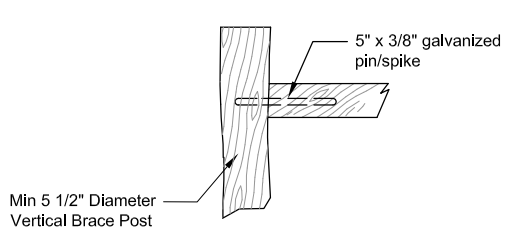

BRACE PINS DETAIL

(see note 6)
n.t.s.

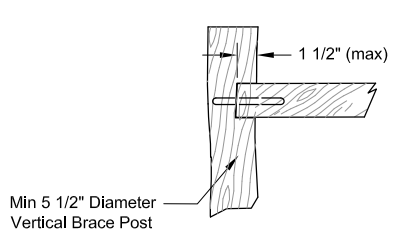

NOTCH DETAIL

(see note 6)
n.t.s.

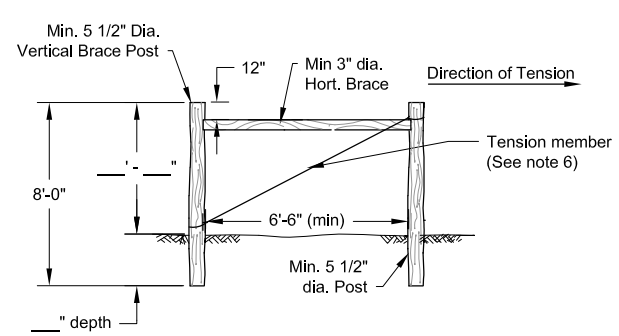

SINGLE HORIZONTAL IN-LINE BRACE

n.t.s.
(when direction of tension is in opposite direction,
angle tension wires in opposite direction)

NOTES

1. All fences shall meet NRCS Standards and Specifications for Fencing, Code 382 in the local N.R.C.S. Field Office Technical Guide.
2. Barbed wire shall be Class 3 Galvanized conforming to ASTM A121. Barbed wire shall be attached to the post on the side that will receive the greatest amount of pressure, except in corners. Barbs shall be spaced on no more than 5 inch centers with 4-point barb or 4 inch centers with 2-point barb. All barbed wire shall be the double strand type and shall meet one of the following criteria:
   A. Minimum 12 ½ gage standard steel wire.
   B. Minimum 15 ½ gage high tensile strength steel wire.
3. Post spacing shall not exceed 30 feet. If posts are placed more than 16 ft. apart, stays will be required. Stays shall be placed as follows:

Post Spacing	Stays
< 16'	0
> 16' and < 22'	1
> 22' and < 30'	2

4. Staples shall be 9 gage, class 3 galvanized, and shall be a minimum of 1 1/2 inches long for soft woods and 1 inch long for hard wood posts. Nails shall be galvanized and spiral or ring shaped at least 3 or 3 ½ inches long.
5. All wire and hardware will be new galvanized material.
6. Braces are required at all corners, gates, at all definite angles (>15 degrees) in the fence line, and at intervals not to exceed 1320 feet. A tension member composed of 2 complete loops of 9 gage smooth wire, 12 gage double strand, or 12.5 high tensile wire and shall extend from the same height as the horizontal brace member to 4" above ground level of the post being braced. The brace wire shall be twisted to secure the brace and provide needed rigidity. The horizontal brace shall be secured into the brace post at a notched depth of 1 ½" and use 3/8" galvanized pin or spike driven through the post that penetrates the horizontal member at least 4" in depth. Cut all wires at the anchor post of inline brace assemblies and wrap the wire around the anchor post twice, staple to post and tightly twist ends around the stretched wire.
7. Standard "tee" or "U" section steel post conforming to ASTM A702 may be used in lieu of wooden line posts. Length shall be same as for wooden post. Steel post shall be rolled from high carbon steel and weigh a minimum of 1.25 lb/ft, exclusive of the anchor plate. The coating may be either galvanized by the hot dip process or painting in accordance with Commercial Standard 184 with one or more coats of high grade, weather resistant steel paint, or enamel. Steel posts shall be studded, embossed, or punched for the attachment of wire to the posts. Wire shall be attached to the posts by wrapping with 14 gage galvanized wire or by use of manufacturer's special designed clips.

WOOD POST TREATMENT			
POST	KIND OF TREATMENT	MINIMUM RETENTION OF PRESERVATION	ASTM SPECIFICATION
LINE POST, AND HORIZONTAL BRACES	CROMATED COPPER ARSENATE	0.4 LBS. / CU.FT.	D-1760
CORNER, GATE, AND VERTICAL BRACE POSTS	CROMATED COPPER ARSENATE	0.4 LBS. / CU.FT	D-1760

Barbed Wire Fence Details

Standard DWG. No. FL-382A

Date: 11/2015 | Sheet 1 of 1

Revisions		
Date	Approved	Title

Date
Designed
Drawn
Checked
Approved

Barbed Wire Fence Details

United States Department of Agriculture
Natural Resources Conservation Service

File No.
FL-382A.dwg

Drawing No.

Sheet 1 of 1