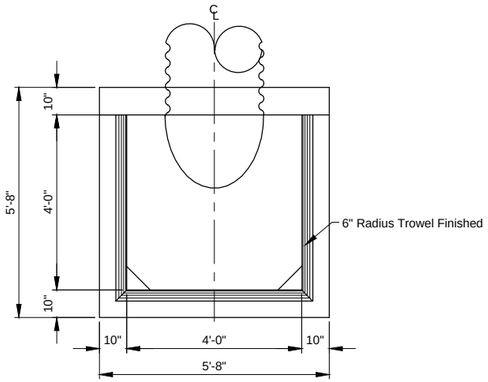

PLAN VIEW
n.t.s.

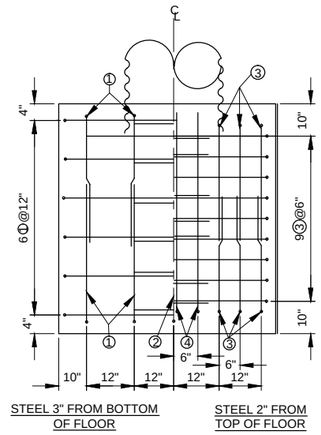

PLAN VIEW FLOOR SLAB
n.t.s.

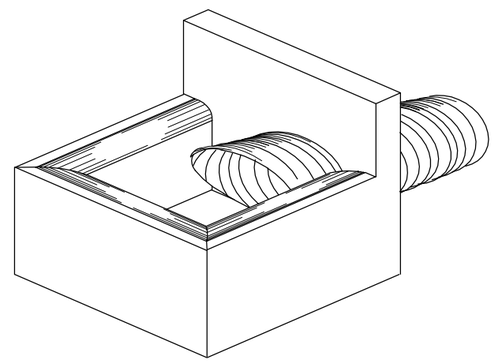

ISOMETRIC
n.t.s.

STEEL SCHEDULE

FOR TYPICAL BAR TYPES REFER TO
A.C.I. STANDARD 315 - 65

LOCATION	MARK	SIZE	QUANTITY	LENGTH	TYPE	B	C	TOTAL FIT
Floor & Walls	1	3	20	6'-0"	17	2'-6"	3'-6"	120'-0"
Floor & Walls	2	3	1	7'-9"	17	2"-6"	5'-3"	7"-9"
Floor & Walls	3	3	30	4'-9"	17	1'-9"	3'-0"	142'-6"
Floor & Walls	4	3	3	6'-6"	17	1'-9"	4'-9"	19'-6"
Walls	5	3	10	7'-0"	17	3"-6"	3'-6"	70'-0"
Walls	6	3	14	6'-0"	17	3'-0"	3'-0"	84'-0"
Walls	7	3	2	5'-3"	17	1'-9"	3'-6"	10'-6"
Walls	8	3	6	4'-3"	17	1'-3"	3'-0"	25'-6"
Downstream Wall	9	3	7	5'-3"	ST.			36'-9"
Downstream Wall	10	3	12	3'-6"	ST.			42'-0"
Downstream Wall	11	3	4	2'-3"	ST.			9'-0"

QUANTITIES

Reinforcing Steel #3 Bars 567.50 Lin Ft. 213.38 Lbs.
Volume of Concrete 2.7 Cu. Yds.
¼"x6" Carbon Steel Plate 17.50 Lin. Ft.

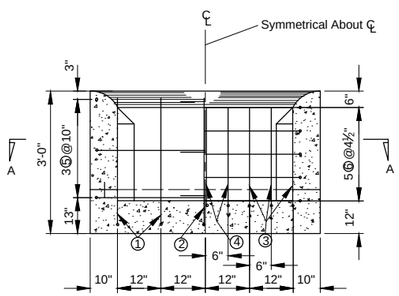

UPSTREAM WALL ELEVATION
n.t.s.

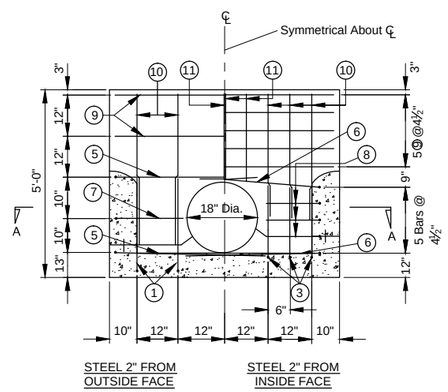

DOWNSTREAM WALL ELEVATION
n.t.s.

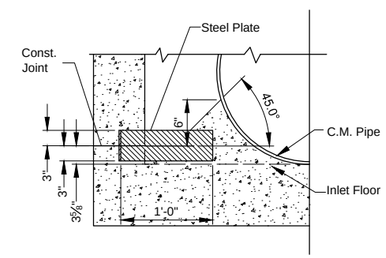

PLATE CONSTRUCTION JOINT DETAIL
n.t.s.

NOTE:
¼"x 6" Carbon Steel Plate Shall Be Continuous Around Inlet Except At C.M. Pipe As Shown.

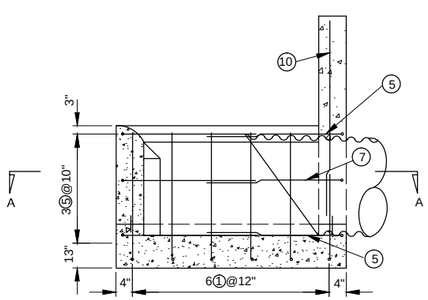

STEEL 2" FROM OUTSIDE FACE

SIDE WALL ELEVATION
n.t.s.

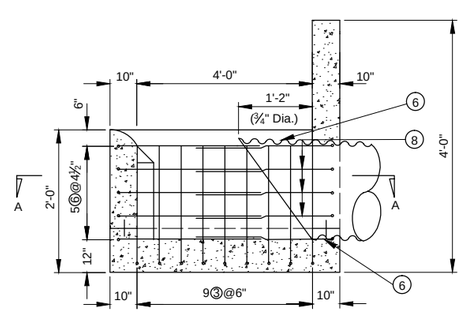

STEEL 2" FROM INSIDE FACE

SIDE WALL ELEVATION
n.t.s.

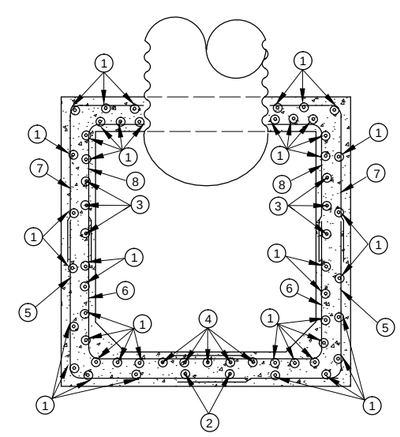

SECTION A-A
n.t.s

NOTES AND SPECIFICATIONS

Revisions		
Date	Approved	Title

Concrete Box Hooded Inlet
18" Diameter Pipe

Standard DWG. No. FL-410D1.dwg
Date | Sheet 1 of 8

Date
Designed
Drawn
Checked
Approved

Concrete Box Hooded Inlet
18" Diameter Pipe

United States Department of Agriculture
Natural Resources Conservation Service

File No.
FL-410D1.dwg

Drawing No.

Sheet 1 of 8

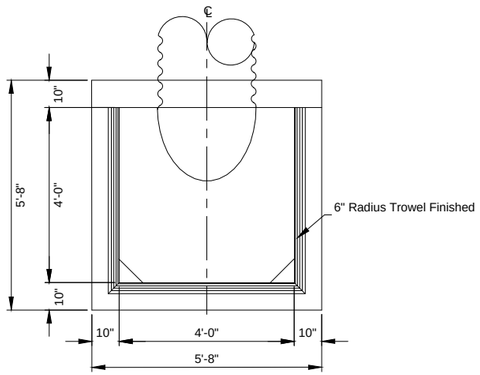

PLAN VIEW
n.t.s.

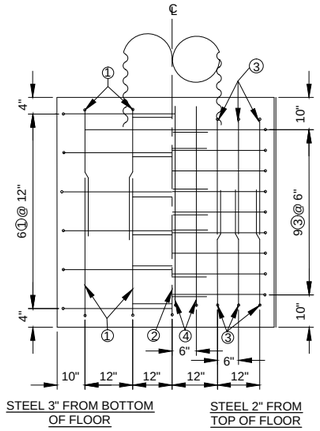

PLAN VIEW FLOOR SLAB
n.t.s.

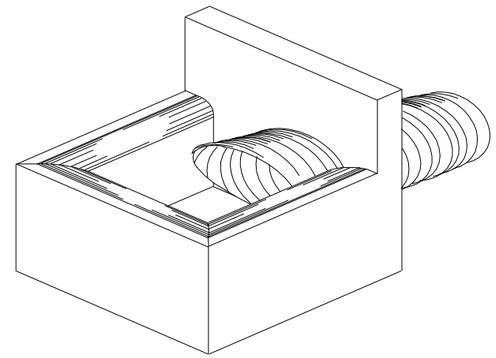

ISOMETRIC
n.t.s.

STEEL SCHEDULE

FOR TYPICAL BAR TYPES REFER TO
A.C.I. STANDARD 315 - 65

LOCATION	MARK	SIZE	QUANTITY	LENGTH	TYPE	B	C	TOTAL FIT
Floor & Walls	1	3	20	6'-0"	17	2'-6"	3'-6"	120'-0"
	2	3	1	7'-9"	17	2"-6"	5'-3"	7"-9"
	3	3	30	4'-9"	17	1'-9"	3'-0"	142'-6"
	4	3	3	6'-6"	17	1'-9"	4'-9"	19'-6"
Walls	5	3	10	7'-0"	17	3"-6"	3'-6"	70'-0"
	6	3	14	6'-0"	17	3'-0"	3'-0"	84'-0"
	7	3	2	5'-0"	17	1'-6"	3'-6"	10'-0"
	8	3	6	4'-0"	17	1'-0"	3'-0"	24'-0"
Downstream Wall	9	3	7	5'-3"	ST.			36'-9"
	10	3	12	3'-6"	ST.			48'-0"
	11	3	4	1'-9"	ST.			7'-0"

QUANTITIES

Reinforcing Steel #3 Bars 563.50 Lin Ft. 811.88 Lbs.
Volume of Concrete 2.7 Cu. Yds.
¼"x6" Carbon Steel Plate 17.00 Lin. Ft.

NOTES AND SPECIFICATIONS

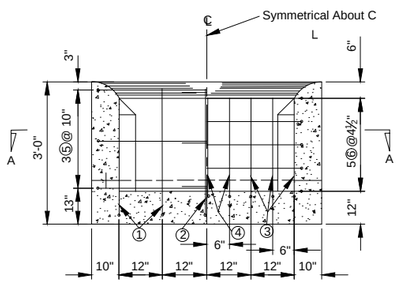

UPSTREAM WALL ELEVATION
n.t.s.

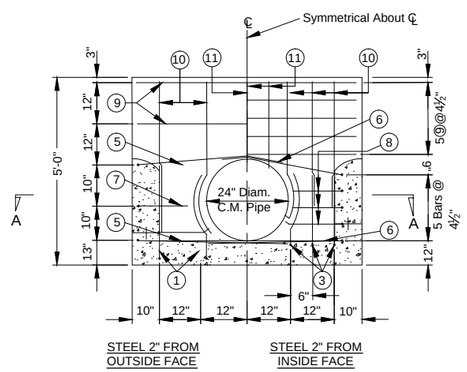

DOWNSTREAM WALL ELEVATION
n.t.s.

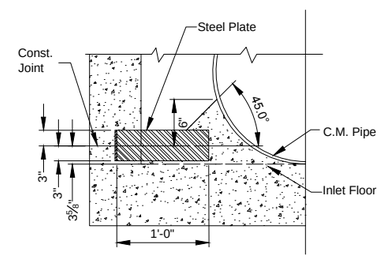

PLATE CONSTRUCTION JOINT DETAIL
n.t.s.

NOTE:
¼"x 6" Carbon Steel Plate Shall Be Continuous Around Inlet
Except At C.M. Pipe As Shown.

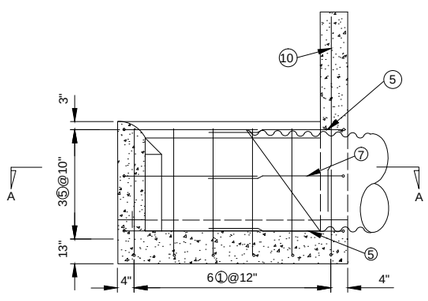

STEEL 2" FROM OUTSIDE FACE

SIDE WALL ELEVATION
n.t.s.

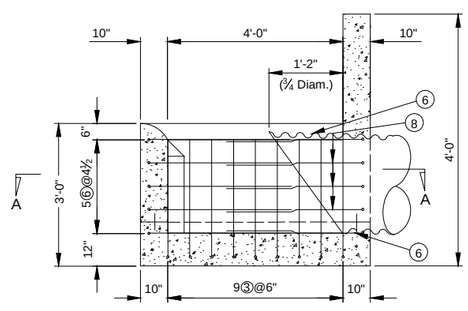

STEEL 2" FROM INSIDE FACE

SIDE WALL ELEVATION
n.t.s.

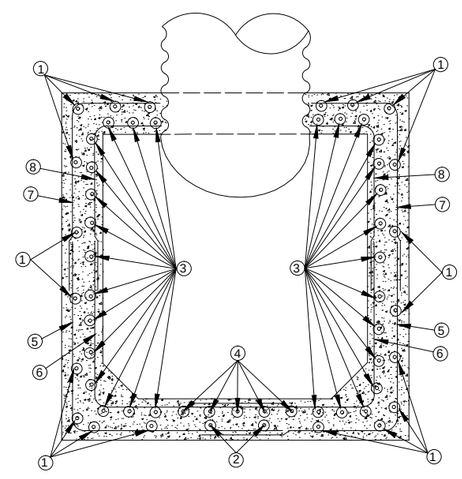

SECTION A-A
n.t.s

Concrete Box Hooded Inlet
24" Diameter Pipe

Standard DWG. No. FL-410D1.dwg

Date | Sheet 2 of 8

Revisions		
Date	Approved	Title

Date
Designed
Drawn
Checked
Approved

Concrete Box Hooded Inlet
24" Diameter Pipe

United States Department of Agriculture
Natural Resources Conservation Service

File No.
FL-410D1.dwg

Drawing No.

Sheet 2 of 8

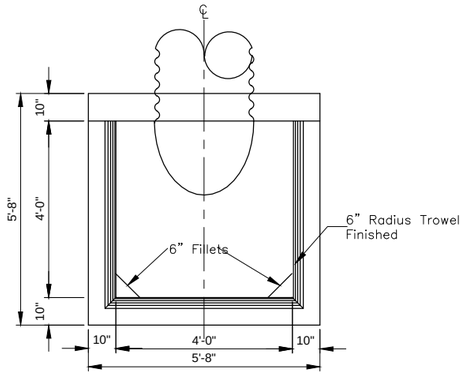

PLAN
n.t.s.

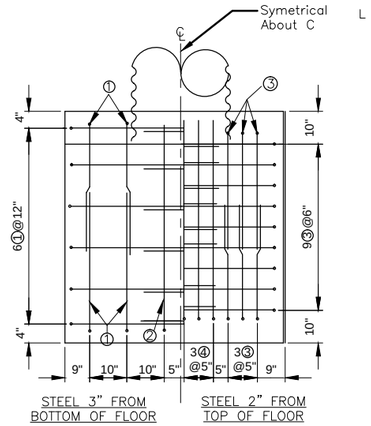

PLAN FLOOR SLAB
n.t.s.

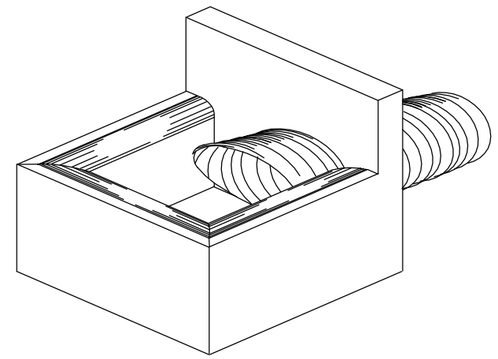

ISOMETRIC
n.t.s.

STEEL SCHEDULE

FOR TYPICAL BAR TYPES REFER TO
A.C.I. STANDARD 315 - 65

LOCATION	MARK	SIZE	QUANTITY	LENGTH	TYPE	B	C	TOTAL FIT
Floor & Walls	1	3	20	6'-9"	17	3'-3"	3'-6"	135'-0"
Floor & Walls	2	3	2	8'-6"	17	3"-3"	5'-3"	17"-0"
Floor & Walls	3	3	30	5'-6"	17	2'-6"	3'-0"	165'-0"
Floor & Walls	4	3	5	7'-3"	17	2'-6"	4'-9"	36'-3"
Walls	5	3	12	7'-0"	17	3"-6"	3'-6"	84'-0"
Walls	6	3	14	6'-0"	17	3'-0"	3'-0"	84'-0"
Walls	7	3	4	4'-9"	17	1'-3"	3'-6"	19'-0"
Walls	8	3	6	3'-9"	17	9'-9"	3'-0"	22'-6"
Downstream Wall	9	3	9	5'-3"	ST.			47'-3"
Downstream Wall	10	3	12	4'-6"	ST.			54'-0"
Downstream Wall	11	3	7	2'-6"	ST.			17'-6"

QUANTITIES

Reinforcing Steel #4 Bars 681.50 Lin Ft. 256.24 Lbs.
Volume of Concrete 3.1 Cu. Yds.
¼"x6" Carbon Steel Plate 16.50 Lin. Ft.

NOTES AND SPECIFICATIONS

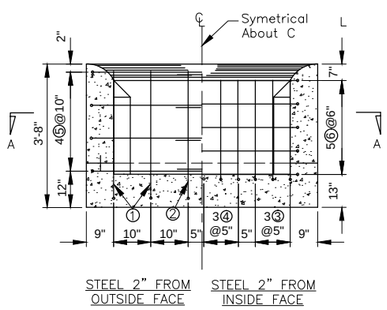

UPSTREAM WALL ELEVATION
n.t.s.

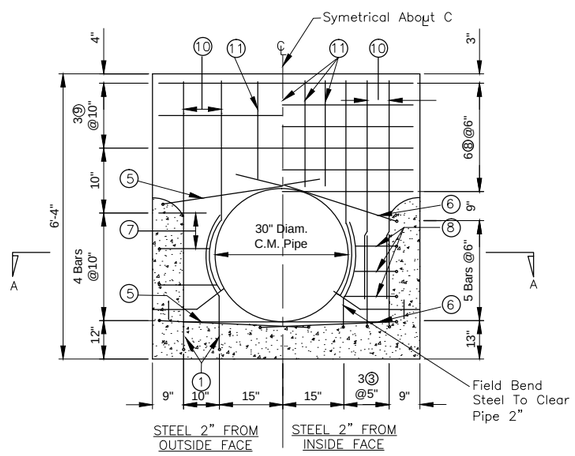

DOWNSTREAM WALL ELEVATION
n.t.s.

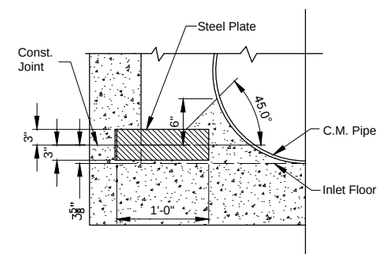

PLATE CONSTRUCTION JOINT DETAIL
n.t.s.

NOTE:
¼"x6" Carbon Steel Plate Shall Be Continuous Around Inlet Except At C.M. Pipe As Shown.

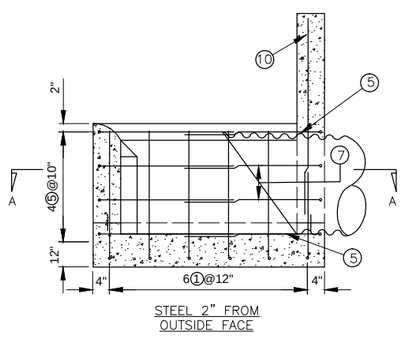

SIDE WALL ELEVATION
n.t.s.

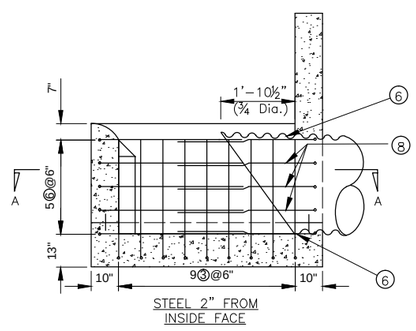

SIDE WALL ELEVATION
n.t.s.

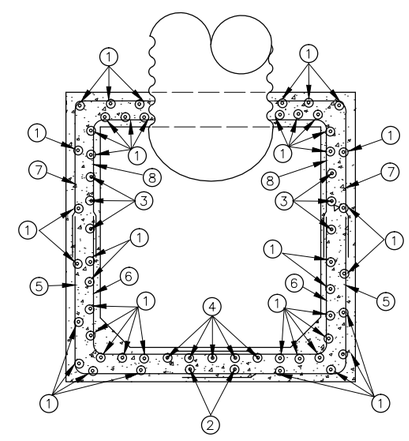

SECTION A-A
n.t.s

Concrete Box Hooded Inlet
For 30" Diameter Pipe

Standard DWG. No. FL-410D1.dwg
Date | Sheet 3 of 8

Revisions		
Date	Approved	Title

Date
Designed
Drawn
Checked
Approved

Concrete Box Hooded Inlet
For 30" Diameter Pipe

United States Department of Agriculture
Natural Resources Conservation Service

File No.
FL-410D1.dwg

Drawing No.

Sheet 3 of 8

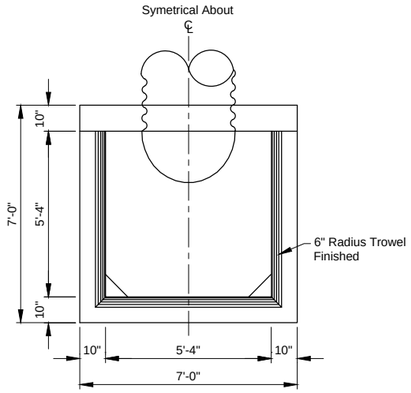

PLAN VIEW
n.t.s.

NOTE: Concrete Floor Shall be 12" Thick

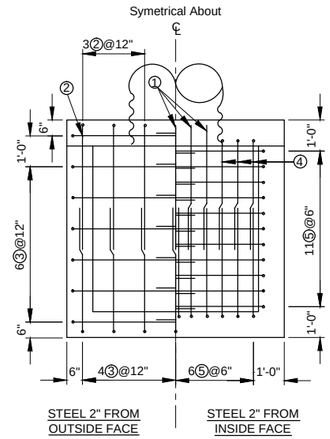

PLAN FLOOR SLAB
n.t.s.

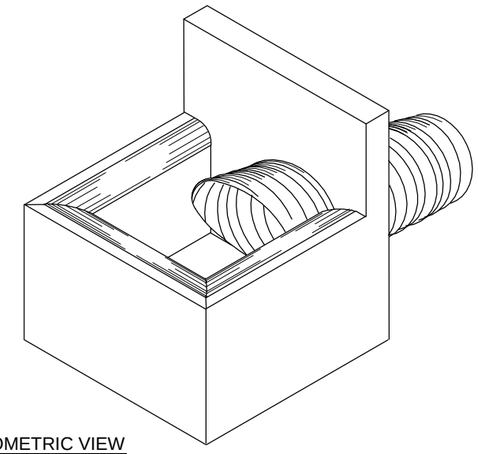

ISOMETRIC VIEW
n.t.s.

STEEL SCHEDULE

FOR TYPICAL BAR TYPES REFER TO A.C.I.
STANDARD 315 - 65

Location	Mark	Size	Quan.	Length	Type	C	D	Total
Floor Slab	1	3	6	4'-0"	ST.			24'-0"
	2	3	8	6'-6"	17	4'-0"	2'-6"	52'-0"
Floor Slab & Walls	3	3	19	7'-9"	17	4'-0"	3'-9"	147'-3"
	4	3	6	5'-6"	17	3'-6"	2'-0"	33'-0"
	5	3	33	6'-6"	17	3'-6"	3'-0"	214'-6"
Downstream Wall	6	3	12	6'-0"	ST.			72'-0"
Walls	7	3	34	6'-6"	ST.			221'-0"
	8	3	20	8'-0"	17	4'-0"	4'-0"	160'-0"
	9	3	8	3'-3"	ST.			26'-0"
	10	3	14	1'-9"	ST.			24'-6"

QUANTITIES

Reinforcing Steel #3 Bars 974.25 Lin. Ft. 366.32 Lbs.
Volume Of Concrete 4.9 Cu. Yds.
¼"x6" Carbon Steel Plate 21.50 Lin. Ft.

NOTES AND SPECIFICATIONS

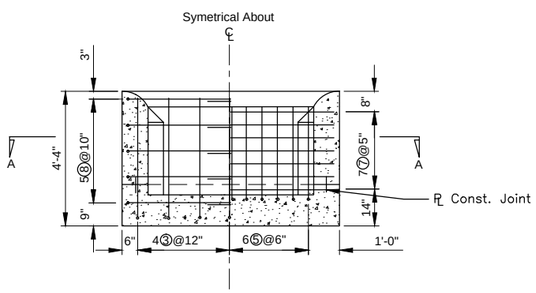

UPSTREAM WALL ELEVATION
n.t.s.

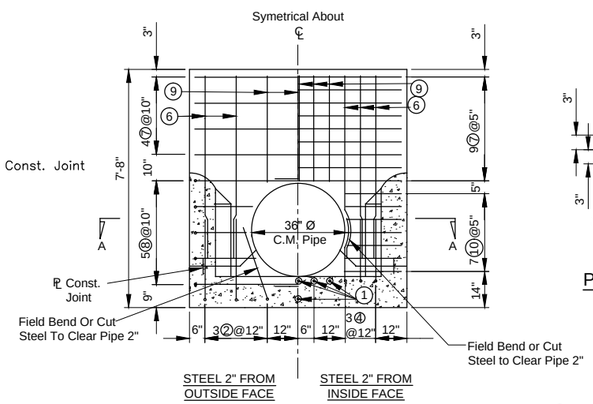

DOWNSTREAM WALL ELEVATION
n.t.s.

NOTE: ¼" x 6" Carbon Steel Plate Shall Be Continuous Around Inlet Except At C.M. Pipe As Shown.

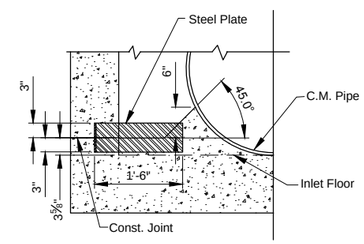

PLATE CONSTRUCTION JOINT DETAIL
n.t.s.

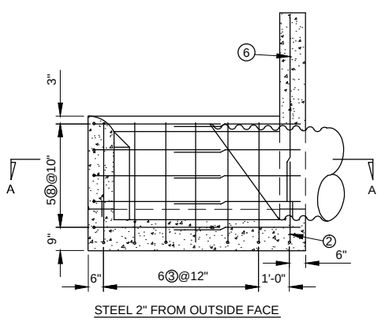

SIDE WALL ELEVATION
n.t.s.

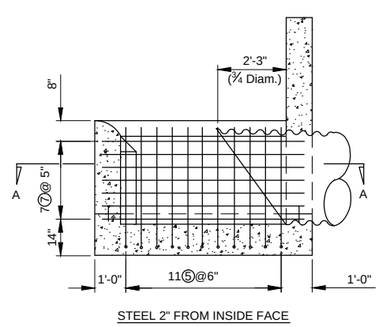

SIDE WALL ELEVATION
n.t.s.

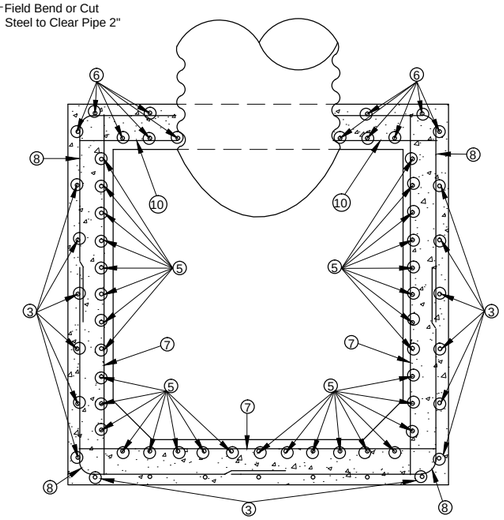

SECTION A-A
n.t.s.

Concrete Box Hooded Inlet
36" Diameter Pipe

Standard DWG. No.	FL-410D1.dwg
Date	Sheet 4 of 8

Revisions

Date	Approved	Title

Date
Designed
Drawn
Checked
Approved

Concrete Box Hooded Inlet
36" Diameter Pipe

United States Department of Agriculture
Natural Resources Conservation Service

File No.
FL-410D1.dwg

Drawing No.

Sheet 4 of 8

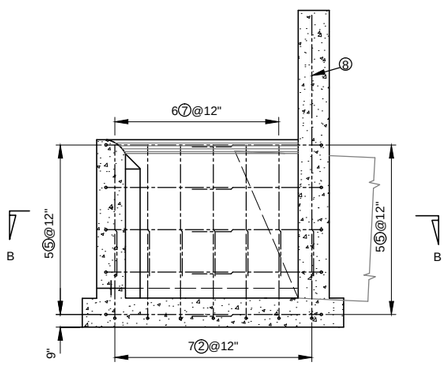

STEEL 2" FROM OUTSIDE FACE

SIDE WALL ELEVATION
n.t.s.

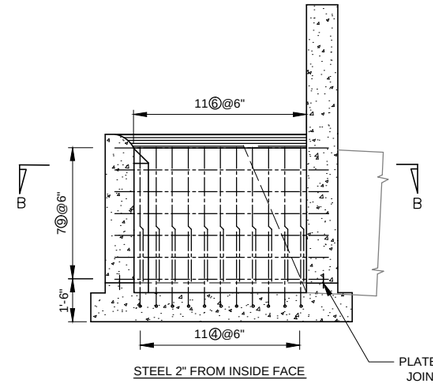

STEEL 2" FROM INSIDE FACE

SIDE WALL ELEVATION
n.t.s.

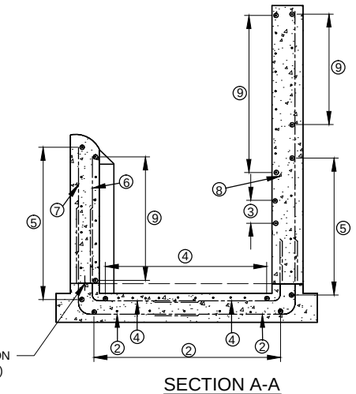

SECTION A-A
n.t.s.

STEEL SCHEDULE

FOR TYPICAL BAR TYPES REFER TO A.C.I. STANDARD 315-65

LOCATION	MARK	SIZE	QUANTITY	LENGTH	TYPE	C	D	TOTAL FT.
Floor & Walls	1	3	6	4'–0"	ST.			24'–0"
	2	3	27	6'–6"	17	4'–0"	2'–6"	175'–6"
	3	3	4	1'–6"	ST.			6'–0"
	4	3	39	5'–6"	17	3'–6"	2'–0"	214'–6"
Walls	5	3	20	8'–0"	17	4'–0"	4'–0"	160'–0"
	6	3	33	3'–3"	ST.			107'–3"
	7	3	19	3'–6"	ST.			66'–6"
	8	3	10	7'–6"	ST.			75'–0"
Downstream Wall	9	3	34	6'–6"	ST.			221'–0"
	10	3	4	4'–6"	ST.			18'–0"
	11	3	6	4'–0"	ST.			24'–0"

QUANTITIES

Reinforcing Steel #3 Bars 1.091:15 Lin Ft. 410.50 Lbs.
Class 3.000 Concrete 5.73 Cu. Yds.
¼"x6" Carbon Steel Plate 21'-6" Long for One Construction Joint

NOTES AND SPECIFICATIONS

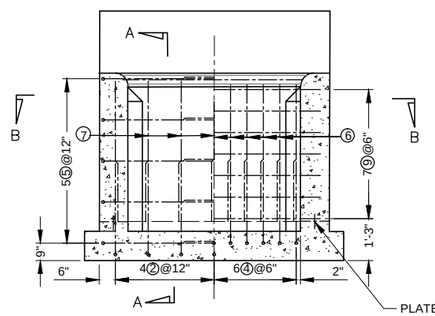

STEEL 2" FROM OUTSIDE FACE — STEEL 2" FROM INSIDE FACE

UPSTREAM WALL ELEVATION
n.t.s.

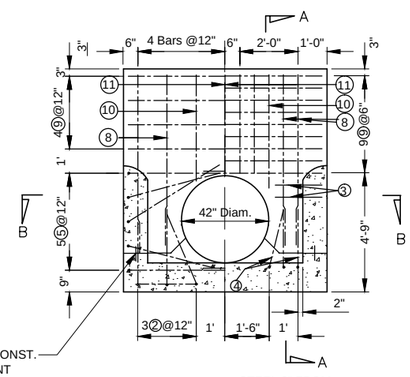

STEEL 2" FROM OUTSIDE FACE — STEEL 2" FROM INSIDE FACE

DOWNSTREAM WALL ELEVATION
n.t.s.

NOTE:
¼"x6" Carbon Steel Plate Shall Be Continuous Around Inlet Except At C.M. Pipe As Shown.

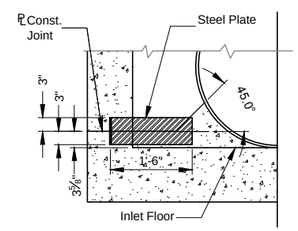

PLATE CONSTRUCTION JOINT DETAIL
n.t.s.

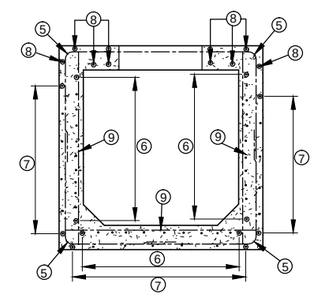

SECTION B-B
n.t.s.

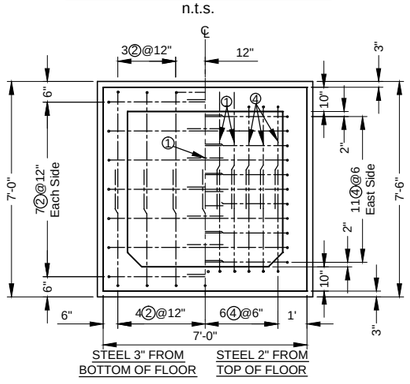

PLAN FLOOR SLAB
n.t.s.

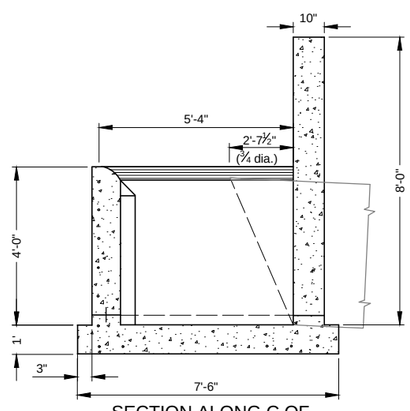

SECTION ALONG ℄ OF PIPE
n.t.s.

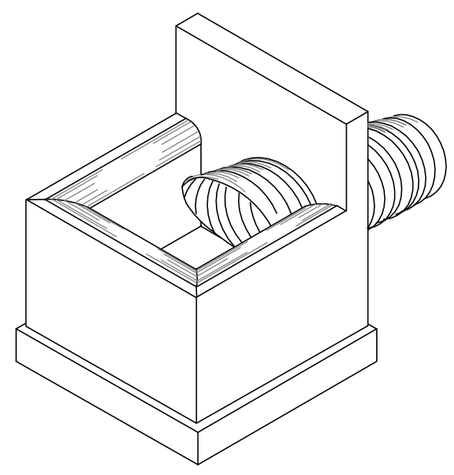

ISOMETRIC VIEW
n.t.s.

Concrete Box Hooded Inlet
42" Diameter Pipe

Standard DWG. No. FL-410D1.dwg

Date | Sheet 5 of 8

Revisions

Date	Approved	Title

Date

Designed

Drawn

Checked

Approved

Concrete Box Hooded Inlet
42" Diameter Pipe

United States Department of Agriculture
Natural Resources Conservation Service

File No.
FL-410D1.dwg

Drawing No.

Sheet 5 of 8

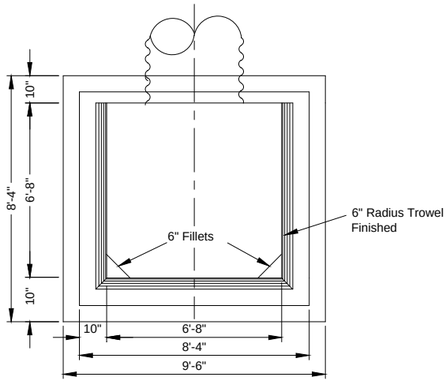

PLAN
n.t.s.

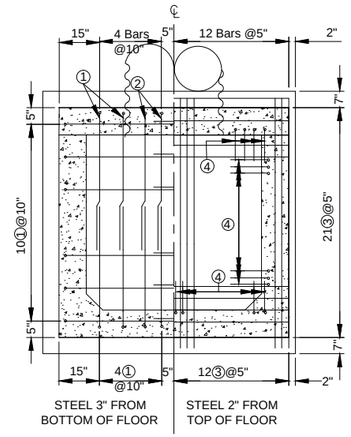

PLAN FLOOR SLAB
n.t.s.

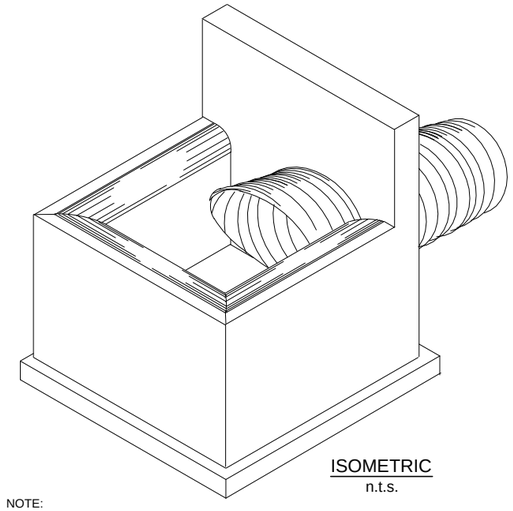

ISOMETRIC
n.t.s.

NOTE:
¼"x6" Carbon Steel Plate Shall Be Continuous Around Inlet Except At C.M. Pipe As Shown.

STEEL SCHEDULE

FOR TYPICAL BAR TYPES REFER TO A.C.I. STANDARD 315-65

LOCATION	MARK	SIZE	QUANTITY	LENGTH	TYPE	C	D	TOTAL FT.
Floor Slab	1	3	32	7'–3"	17	4'–9"	2'–6"	232'–0"
	2	3	4	4'–9"	ST.			19'–0"
	3	3	44	9'–0"	ST.			396'–0"
Floor Slab–Upstrm, Dwnstrm, Sidewalls	4	3	51	3'–3"	17	2'–0"	1'–3"	165'–9"
Sidewalls & Upstrm Walls	5	3	16	9'–6"	17	4'–9"	4'–9"	152'–0"
	6	3	18	9'–0"	17	4'–6"	4'–6"	162'–0"
	7	3	26	3'–6"	ST.			91'–0"
	8	3	41	3'–3"	ST.			133'–3"
Dwnstrm & Sidewalls	9	3	4	6'–6"	17	4'–9"	1'–9"	26'–0"
	10	3	10	6'–0"	17	4'–6"	1'–6"	60'–0"
	11	3	12	8"–0"	ST.			96'–0"
	12	3	14	7'–6"	ST.			105'–0"
	13	3	4	4'–0"	ST.			16'–0"
	14	3	8	3'–9"	ST.			30'–0"

QUANTITIES

#3 Bars 1,684.00 LIN. Ft. 663.18 Lbs.
Class 3,000 Concrete 7.8 Cu. Yds.
¼"x6" Carbon Steel Plate 26'-6" Long for One Construction Joint.

NOTES AND SPECIFICATIONS

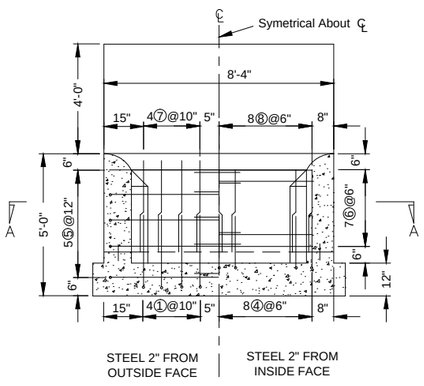

UPSTREAM WALL ELEVATION
n.t.s.

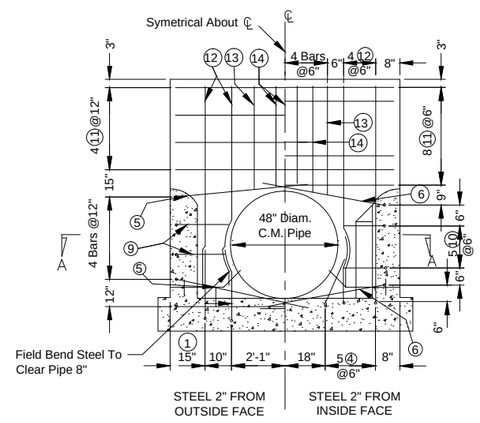

DOWNSTREAM WALL ELEVATION
n.t.s.

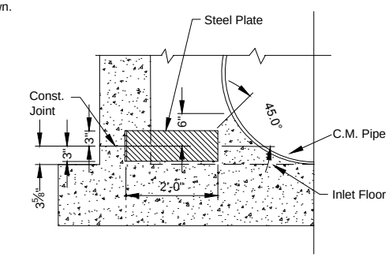

PLATE CONSTRUCTION JOINT DETAIL
n.t.s.

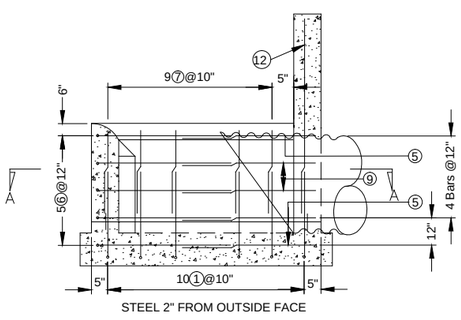

SIDE WALL ELEVATION
n.t.s.

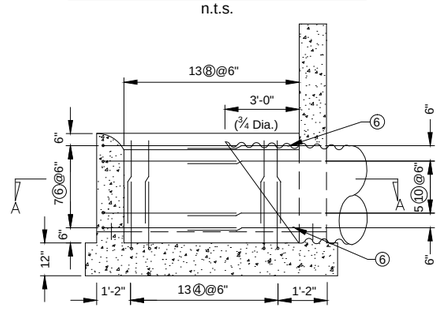

SIDE WALL ELEVATION
n.t.s.

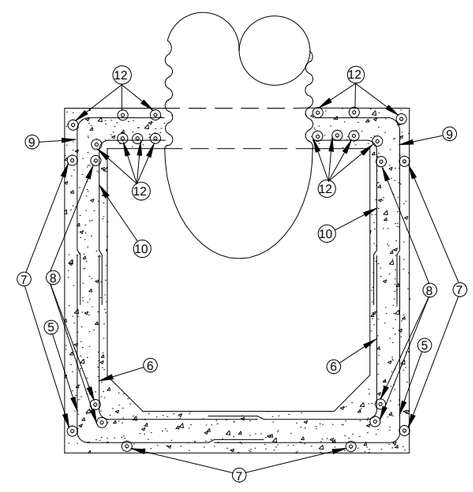

SECTION A-A
n.t.s.

Concrete Box Hooded Inlet
48" Diameter Pipe

Standard DWG. No.	FL-410D1.dwg
Date	Sheet 6 of 8

Revisions		
Date	Approved	Title

Date
Designed
Drawn
Checked
Approved

Concrete Box Hooded Inlet
48" Diameter Pipe

United States Department of Agriculture
Natural Resources Conservation Service

File No.
FL-410D1.dwg

Drawing No.

Sheet 6 of 8

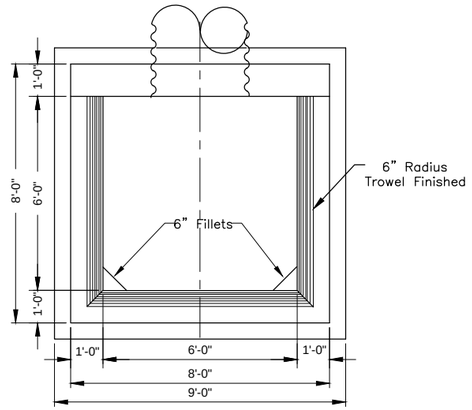

PLAN
n.t.s.

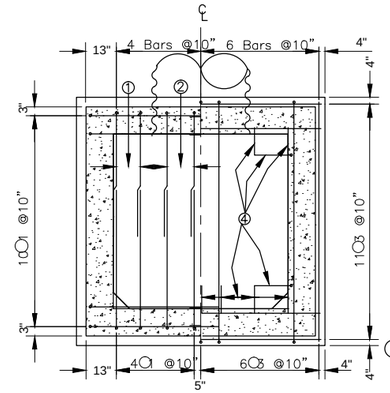

PLAN FLOOR SLAB
n.t.s.

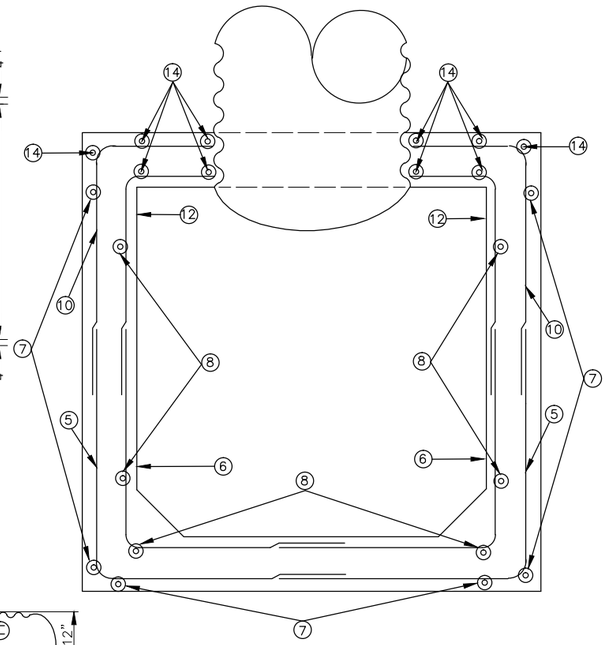

SECTION A–A
n.t.s.

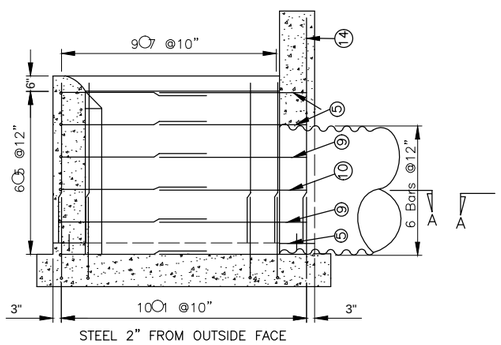

SIDE WALL ELELVATION
n.t.s.

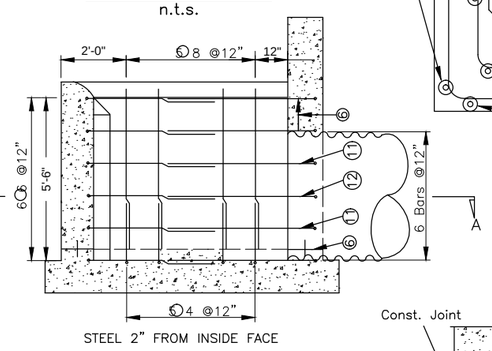

SIDE WALL ELEVATION
n.t.s.

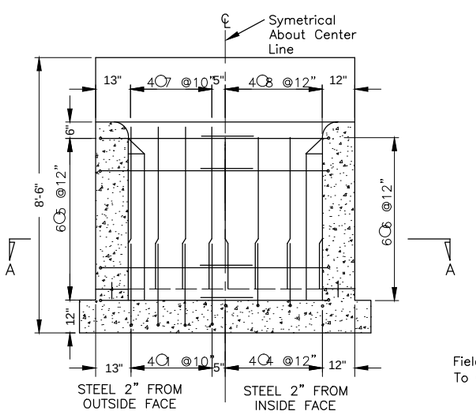

UPSTREAM WALL ELEVATION
n.t.s.

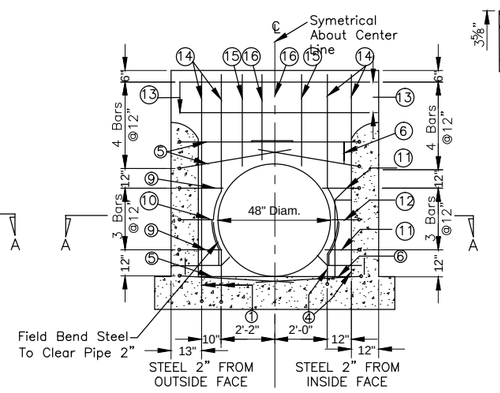

DOWNSTREAM WALL ELEVATION
n.t.s.

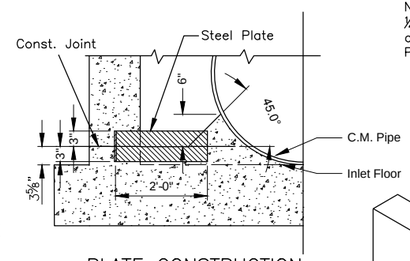

PLATE CONSTRUCTION
JOINT DETAIL
n.t.s.

NOTE:
¼"x 6" Carbon steel plate shall be continuous around inlet except at C.M. Pipe as shown.

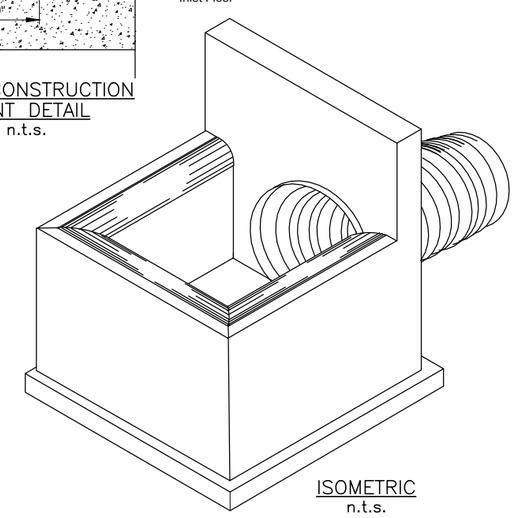

ISOMETRIC
n.t.s.

STEEL SCHEDULE

FOR TYPICAL BAR TYPES REFER TO A.C.I. STANDARD 315-65

LOCATION	MARK	SIZE	QUANTITY	LENGTH	TYPE	C	D	TOTAL FT.
Floor Slab–Upstrm, Dwnstrm, Sidewalls	1	4	32	7'–0"	17	4'–6"	2'–6"	224'–0"
	2	4	4	4'–6"	ST.			18'–0"
	3	4	22	8'–6"	ST.			187'–0"
	4	4	21	3'–3"	17	2'–0"	1'–3"	68'–3"
Sidewalls & Upstrm Walls	5	4	18	9'–0"	17	4'–6"	4'–6"	168'–0"
	6	4	18	8'–0"	17	4'–0"	4'–0"	144'–0"
	7	4	26	5'–0"	ST.			130'–0"
	8	4	17	4'–9"	ST.			80'–9"
Sidewalls & Dwnstrm Walls	9	4	4	6'–6"	17	4'–6"	1'–9"	26'–0"
	10	4	2	6'–3"	17	4'–6"	1'–6"	12'–6"
	11	4	4	5'–3"	17	4'–0"	1'–3"	21'–0"
	12	4	2	5'–0"	17	4'–0"	1'–0"	10'–0"
Sidewalls & Dwnstrm Walls	13	4	4	7'–6"	ST.			30'–0"
	14	4	10	7'–0"	ST.			70'–0"
	15	4	4	3'–3"	ST.			13'–0"
	16	4	3	3'–0"	ST.			9'–0"

QUANTITIES

#4 Bars 1,205.50 LIN. Ft. 805.3 Lbs.
Class 4,000 Concrete 8.9 Cu. Yds.
¼" Carbon Steel Plate 25'–0" Long for One Construction Joint.

NOTES AND SPECIFICATIONS

Concrete Box Inlet
48" Diameter Pipe

Standard DWG. No. FL-410D1.dwg
Date | Sheet 7 of 8

Revisions		
Date	Approved	Title

Date
Designed
Drawn
Checked
Approved

Concrete Box Inlet
48" Diameter Pipe

United States Department of Agriculture
Natural Resources Conservation Service

File No. FL-410D1.dwg
Drawing No.
Sheet 7 of 8

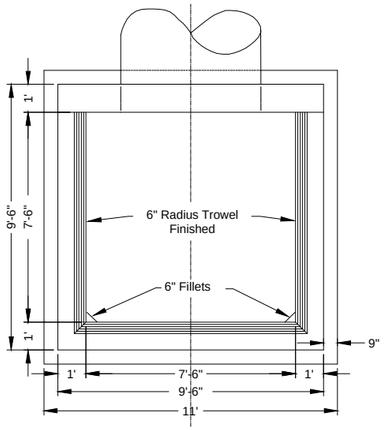

PLAN
n.t.s.

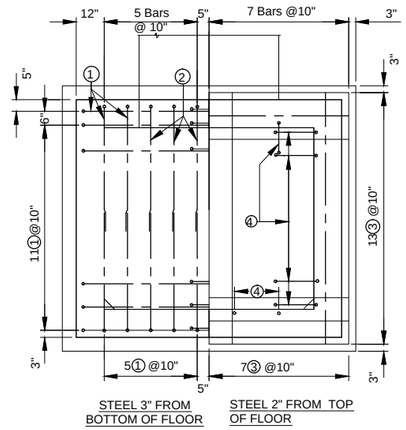

PLAN-FLOOR SLAB
n.t.s.

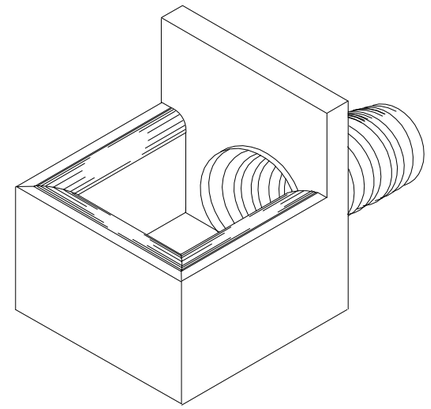

ISOMETRIC VIEW
n.t.s.

LOCATION	MARK	SIZE	QUAN.	LENGTH	TYPE	C	D	TOTAL FT.
Floor Slab– Upstream, Downstream, Sidewalls	1	4	38	7'–9"	ST.	5'–3"	2'–6"	294'–6"
	2	4	6	5'–3"	ST.			31'–6"
	3	4	26	10'–0"	ST.			260'–0"
	4	4	25	3'–3"	ST.	2'–0"	1'–3"	81'–3"
Sidewalls and Upstream Walls	5	4	20	10'–6"	ST.	5'–3"	5'–3"	210'–0"
	6	4	20	9'–6"	ST.	4'–9"	4'–9"	190'–0"
Sidewalls	7	4	32	6'–0"	ST.			192'–0"
	8	4	23	5'–9"	ST.			132'–3"
Sidewalls and Downstream Walls	9	4	4	7'–6"	ST.	5'–3"	2'–3"	30'–0"
	10	4	4	7'–0"	ST.	5'–3"	1'–9"	28'–0"
	11	4	4	6'–6"	ST.	4'–9"	1'–9"	26'–0"
	12	4	4	6'–0"	ST.	4'–9"	1'–3"	24'–0"
Downstream Wall	13	4	4	9'–0"	ST.			36'–0"
	14	4	8	8'–0"	ST.			64'–0"
	15	4	4	4'–0"	ST.			16'–0"
	16	4	4	3'–3"	ST.			13'–0"
	17	4	3	3'–0"	ST.			9'–0"

QUANTITIES

#4 Bars 1,637.50 Lin. ft. 1,093.9 Lbs.
Class 4,000 Concrete 12.5 Cu. Yds.
¼"x6" Carbon Steel Plate 30'-6" Long for Once Construction Joint.

NOTES AND SPECIFICATIONS

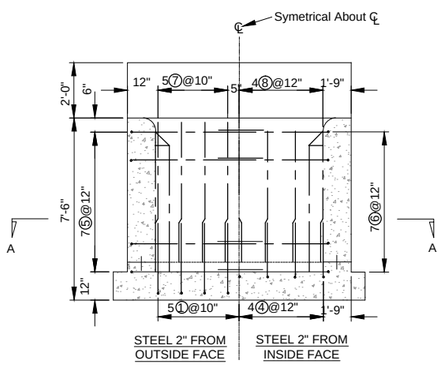

UPSTREAM WALL ELEVATION
n.t.s.

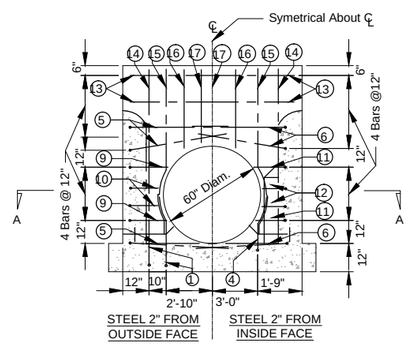

DOWNSTREAM WALL ELEVATION
n.t.s.

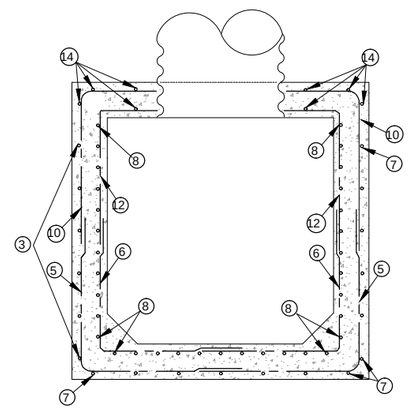

SECTION A-A
n.t.s.

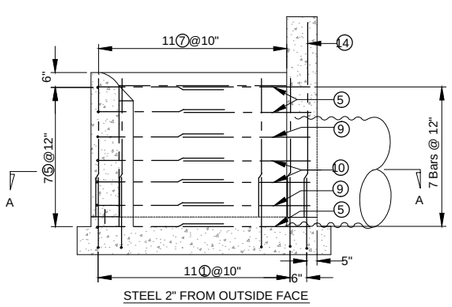

SIDE WALL ELEVATION
n.t.s.

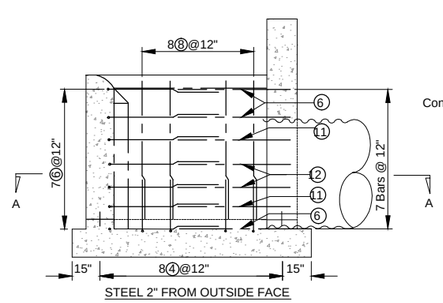

SIDE WALL ELEVATION
n.t.s.

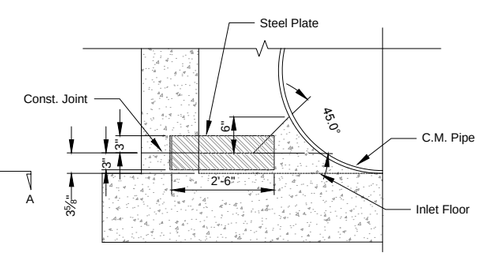

PLATE CONSTRUCTION JOINT DETAIL
n.t.s.

Concrete Box Inlet
60" Diameter Pipe

Standard DWG. No. FL-410D1.dwg

Date | Sheet 8 of 8

Revisions		
Date	Approved	Title

Date
Designed
Drawn
Checked
Approved

Concrete Box Inlet
60" Diameter Pipe

United States Department of Agriculture
Natural Resources Conservation Service

File No.
FL-410D1.dwg

Drawing No.

Sheet 8 of 8