SITE LOCATION

LEGEND

EXISTING PIPE		BENCH MARK	
PROPOSED PIPE		EXISTING TROUGH	
EXISTING PUMP		PROPOSED TROUGH	
PROPOSED PUMP		EXISTING WELL	
EXISTING FENCE		PROPOSED WELL	
PROPOSED FENCE		BOUNDARY LINE	
GATE		PROPOSED SOLAR PUMP	

NRCS makes no representation of the existence or nonexistence of utilities. The presence or absence of utilities on the construction drawings does not assure that there are or are not utilities in the work area.

Utility owners must be notified at least 2 full business days before beginning any excavation or demolition that is not beneath the waters of the state, and not less than 10 full business days before beginning any excavation or demolition that is beneath the waters of the state. Construction shall not commence until all utility companies have been notified and have their utilities located on the ground. A copy of the notification number and positive response will be provided to NRCS.

Not all utilities are members of Sunshine 811. For non-Sunshine 811 members, the landowner/operator is responsible for making every effort to determine if utilities are present in the work area and contact the utility prior to any excavations. The landowner/operator will document in writing of their contacts to non-member utilities.

Always call 811 two full business days before you dig to have underground utilities located and marked.

Sunshine811.com

Revisions		
Date	Approved	Title

Date

Designed

Drawn

Checked

Approved

Livestock Watering System
Site Plan and Site Location

United States Department of Agriculture

Natural Resources Conservation Service

File No.
FL-614A.dwg

Drawing No.

Sheet 1 of 2

Livestock Watering System
Site Plan and Site Location

Standard DWG. No. FL-614A1

Date 02/2015

Sheet 1 of 2

SITE PLAN

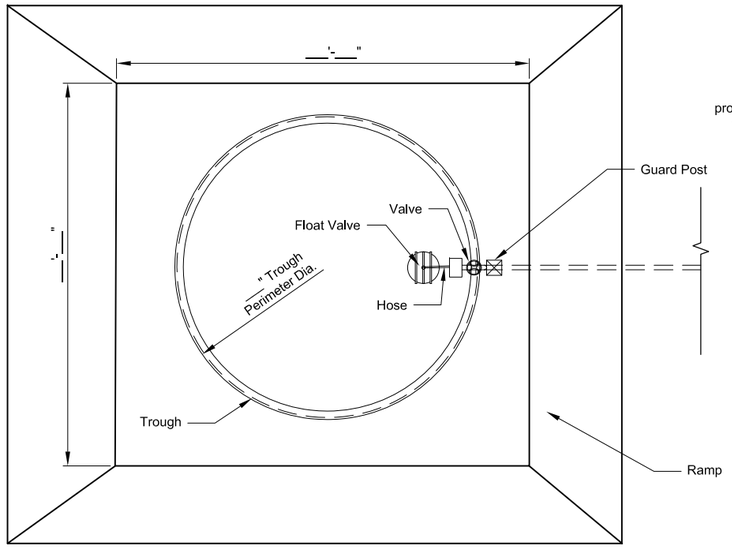

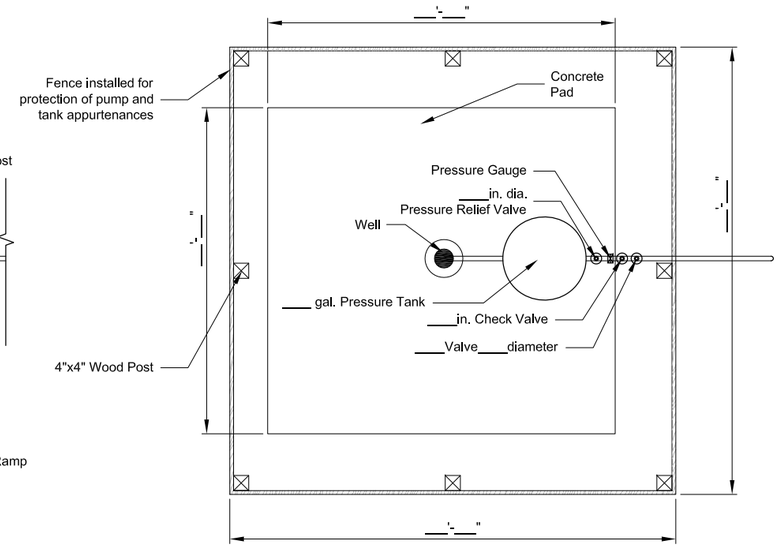

PLAN VIEW
n.t.s.

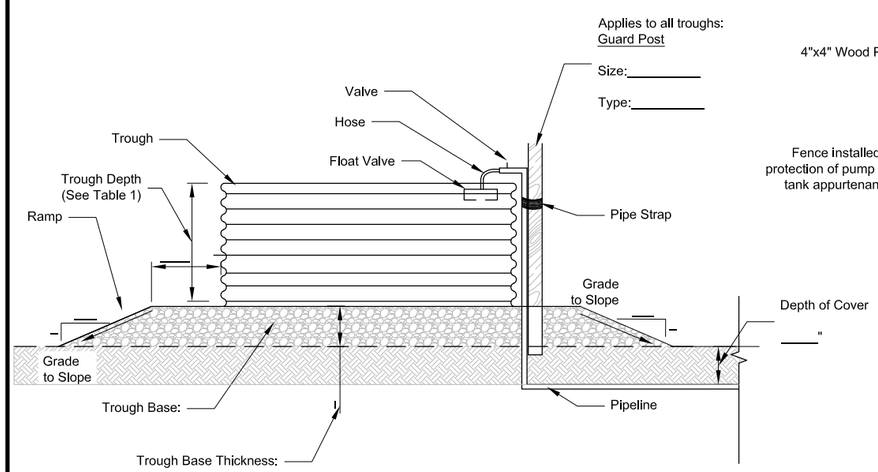

TROUGH SCHEMATIC
n.t.s.

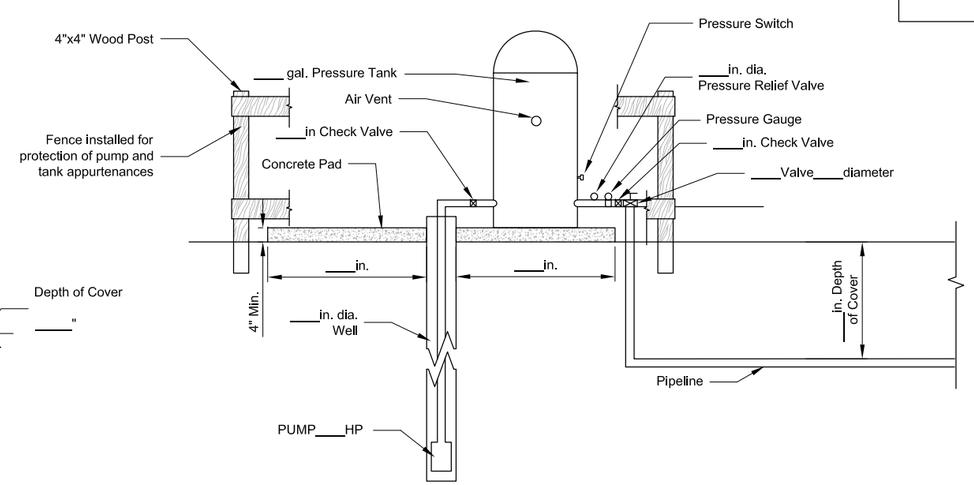

Pump must supply a minimum of_____gpm at ____psi at the pressure tank

Pressure switch shall be set at ____psi

PUMP AND TANK SCHEMATIC
n.t.s.

TABLE 1 - TROUGH SCHEDULE

Field Location	Trough Number	Trough Capacity (Gal.)	Trough Depth		Perimeter of Trough (in.)	Trough Base Material	Trough Base Thickness (in.)
			Min. (in)	Max. (in)			

TABLE 2 - PIPELINE SCHEDULE

Trough Number	Type	Press. Rating (psi)	Diameter (in.)	Valve (in.)	Hose Diameter (in.)	Float Valve (gpm)

TABLE 3 - PUMP AND WELL

Pump Number	Well Number	Pump Discharge (gpm.)	Well Depth (ft)	Well Pipe dia (in.)	Pump Lift (ft.)	Pump HP

NOTES:
1. There is a minimum of ___ days water supply between all troughs on site.
2. _____ watering facilities will be located in the pastures as shown or as marked in the fields.
3. The watering facilities shall have a ___-inch drain plug located at one end, a float valve and ___-inch cutoff valve on each trough.
4. The float valve shall have a minimum flow capability of ___ gallons per minute.
5. Concrete pad shall extend a minimum of 2 feet in all directions from well casing.

Livestock Watering System
Electric Powered

Standard DWG. No. FL-614A.dwg
Date 02/2015 | Sheet 2 of 2

Revisions

Date	Approved	Title

Date
Designed
Drawn
Checked
Approved

Livestock Watering System
Electric Powered

United States Department of Agriculture
Natural Resources Conservation Service

File No.
FL-614A.dwg

Drawing No.

Sheet 1 of 1