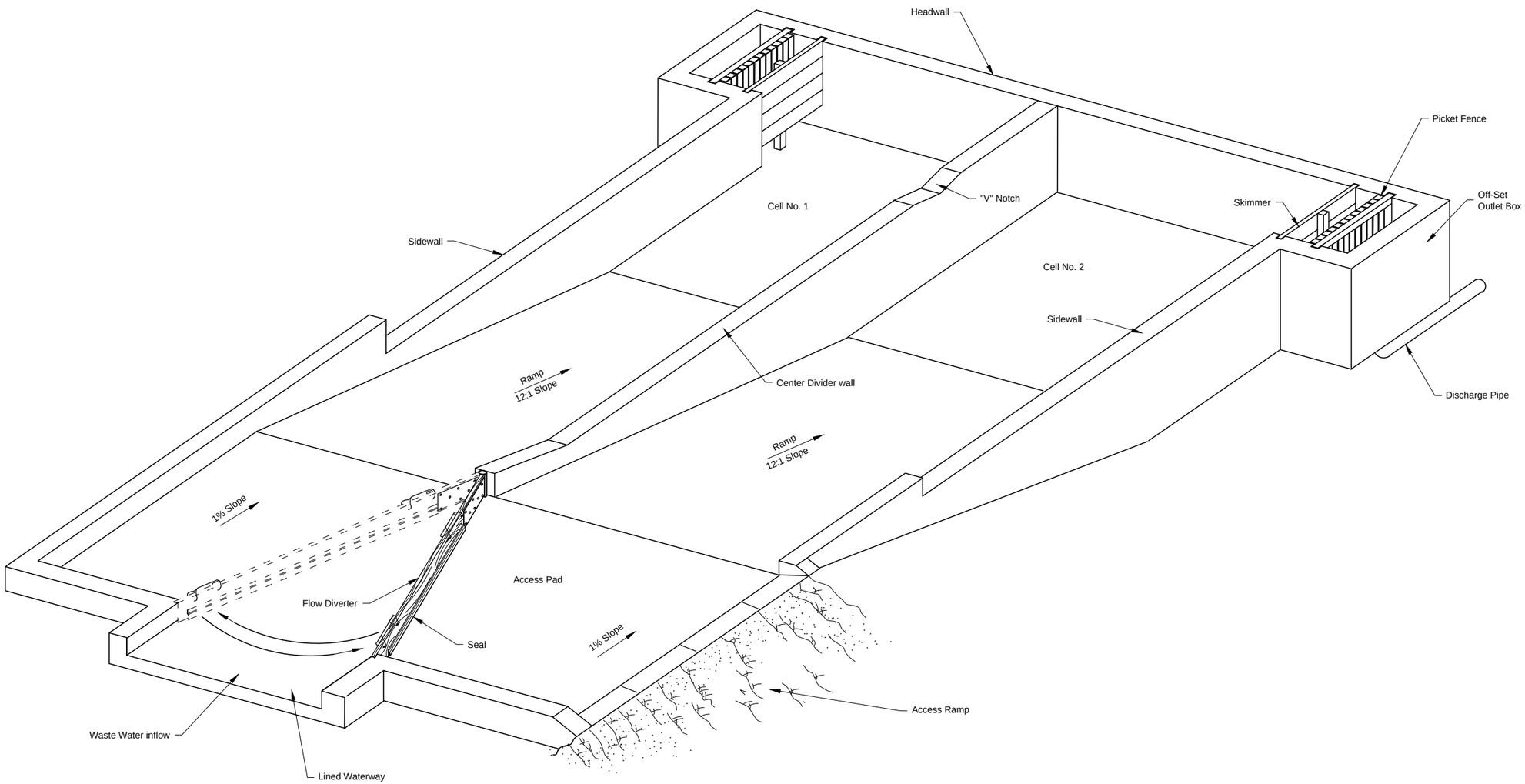

ISOMETRIC VIEW
n.t.s.

Solids Separator With Lined
Waterway Inlet
Isometric View

Standard DWG. No. FL-632A1

Date | Sheet 1 of 4

Revisions		
Date	Approved	Title

Date

Designed

Drawn

Checked

Approved

Solids Separator With Lined Waterway Inlet
Isometric View

United States Department of Agriculture
Natural Resources Conservation Service

File No.
FL-632A.dwg

Drawing No.

Sheet 1 of 4

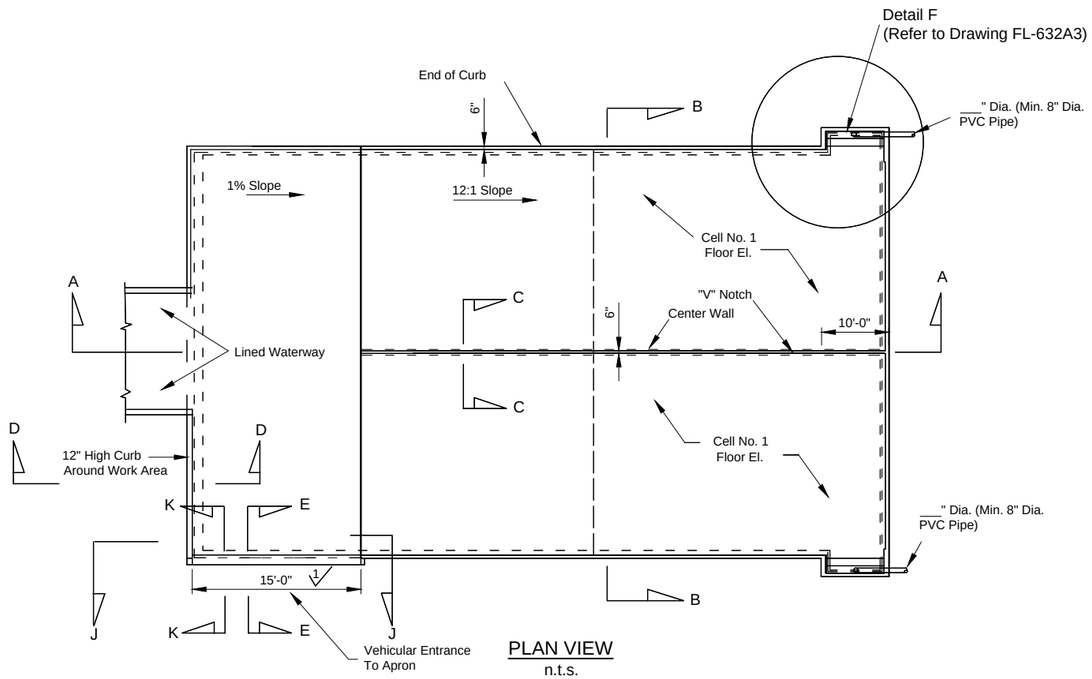

PLAN VIEW
n.t.s.

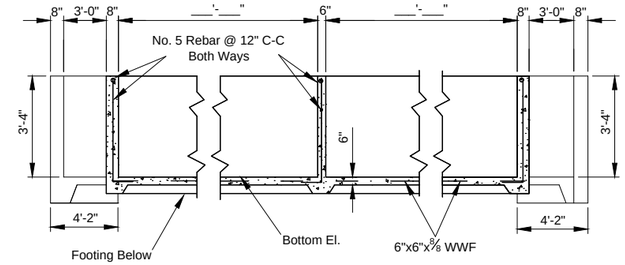

SECTION B-B
n.t.s.

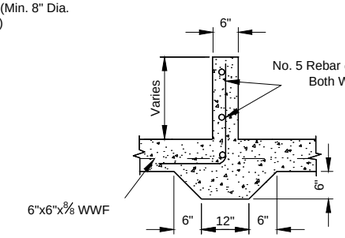

SECTION C-C
n.t.s.

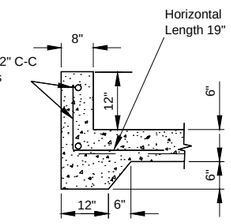

SECTION D-D
n.t.s.

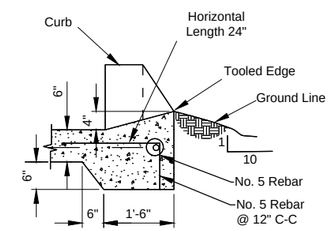

SECTION E-E
n.t.s.

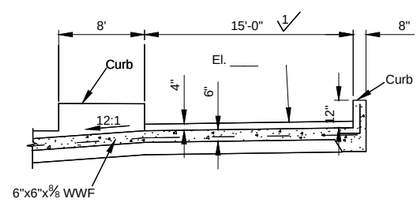

SECTION J-J
n.t.s.

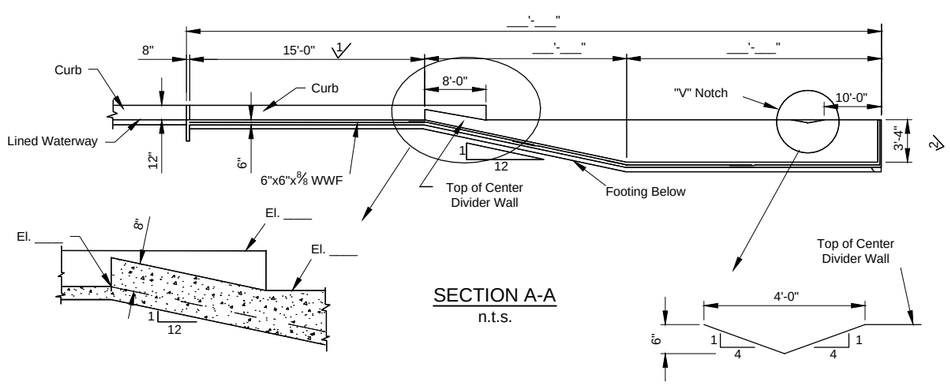

SECTION A-A
n.t.s.

NOTES:

1. Design based on maximum wall height of 3'-4"
2. Each cell shall be designed to hold a min. of 7 days storage of solids @ 1.3 Cu. ft/1000 lb animal/day times % confinement.
3. Refer to operation and maintenance plan for specifics on how to operate the solids separator.
4. Lined waterway and vehicular access to apron to be determined by designer.
5. Class "A" compaction required under floor and ramp.
6. Concrete shall be class 4000M.

1 Width may be increased to accommodate equipment.

2 Push wall may be increased to a wall height of 4'-0"

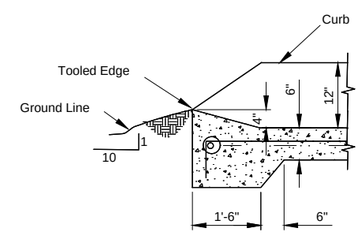

SECTION K-K
n.t.s.

Manure Solids Separator with Lined Waterway Inlet
Plan and Section

Standard DWG. No. FL-632A2

Date | Sheet 2 of 4

Revisions		
Date	Approved	Title

Date
Designed
Drawn
Checked
Approved

Manure Solids Separator with Lined Waterway Inlet
Plan and Section

United States Department of Agriculture
Natural Resources Conservation Service

File No.
FL-632A.dwg

Drawing No.

Sheet 2 of 4

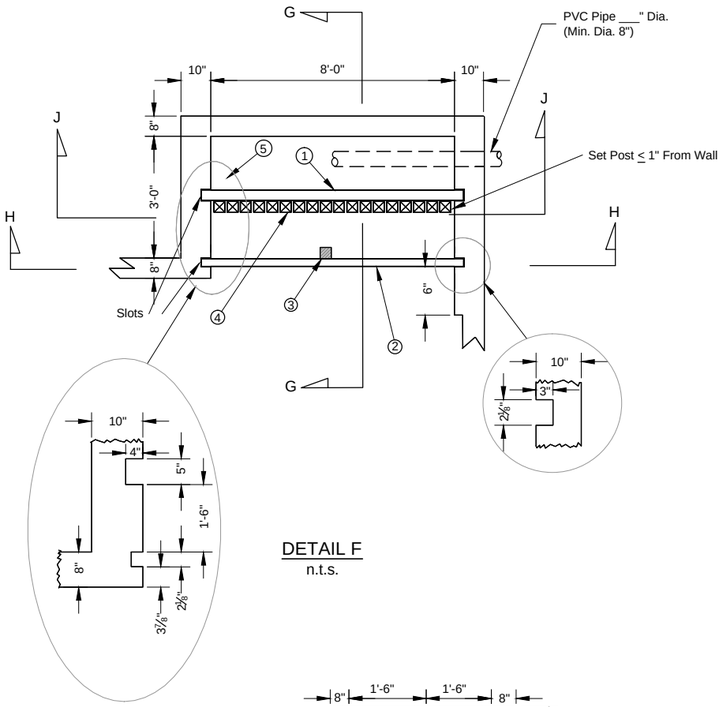

DETAIL F
n.t.s.

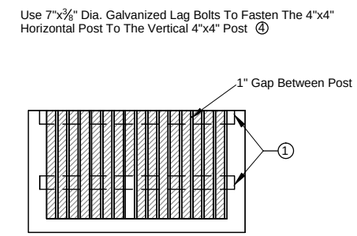

SECTION J-J
n.t.s.

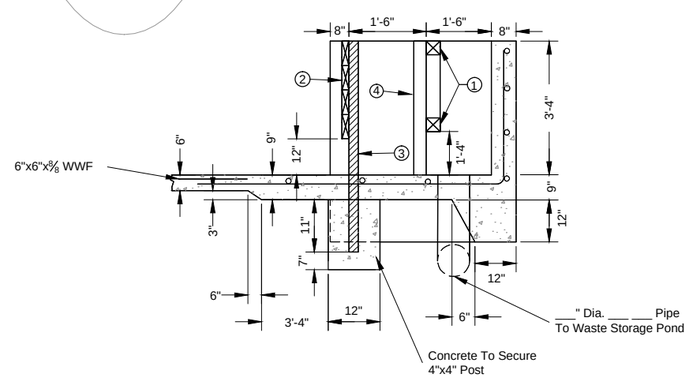

SECTION G-G
n.t.s.

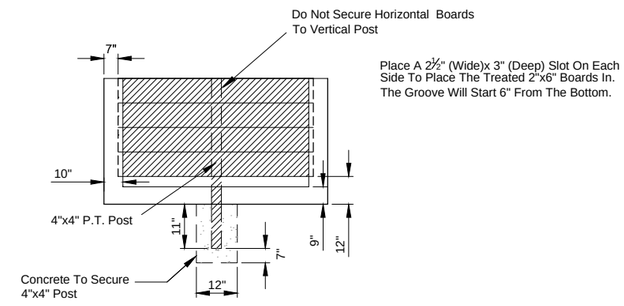

SECTION H-H
n.t.s

Bill Of Materials For Picket Fence Screen (Based On 3'-4" Wall Height)			
ITEM	DESCRIPTION	LENGTH	QUANTITY
①	Pressure Treated 4"x4" Full Cut	8'-6"	2
②	Pressure Treated 2"x6" Skimmer Boards	8'-4"	4
③	Pressure Treated 4"x4" Post Placed 20" Deep In Concrete	5'-0"	1
④	Pressure Treated 4"x4" Post	3'-4"	19
⑤	Galvanized Lag Bolts	7"x⅜" Dia.	38

DETAILS - PICKET FENCE SCREEN
n.t.s.

Manure Solids Separator
with Lined Waterway Inlet Details

Standard DWG. No. FL-632A3

Date | Sheet 3 of 4

Revisions		
Date	Approved	Title

Date

Designed

Drawn

Checked

Approved

Manure Solids Separator
with Lined Waterway Inlet Details

United States Department of Agriculture
Natural Resources Conservation Service

File No.
FL-632A.dwg

Drawing No.

Sheet 3 of 4

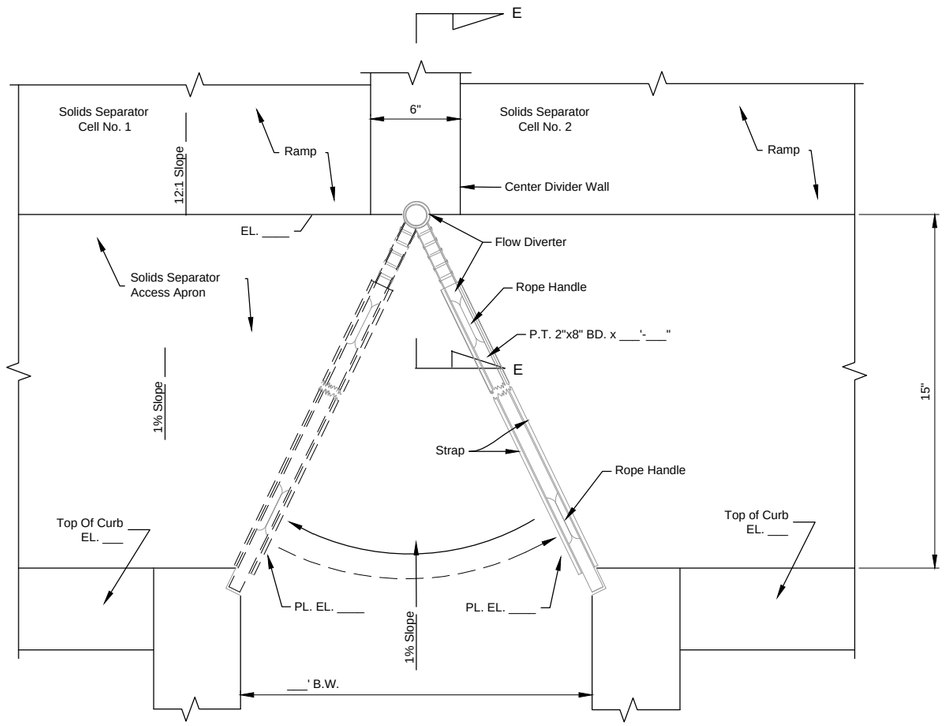

FLOW DIVERTER PLAN VIEW
n.t.s.

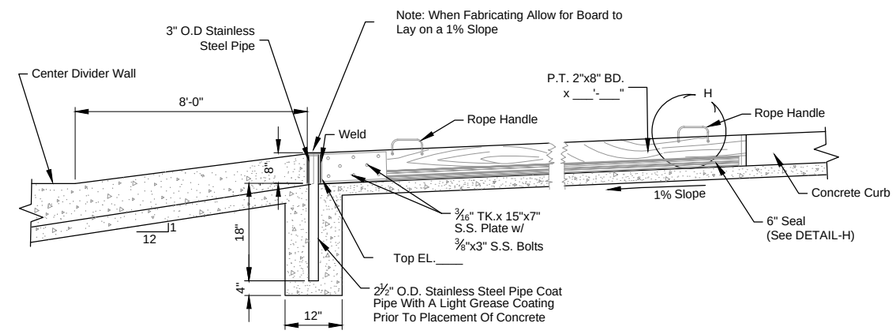

FLOW DIVERTER SECTION VIEW
n.t.s.

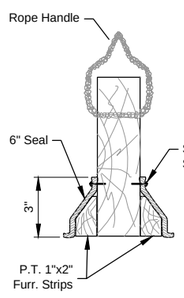

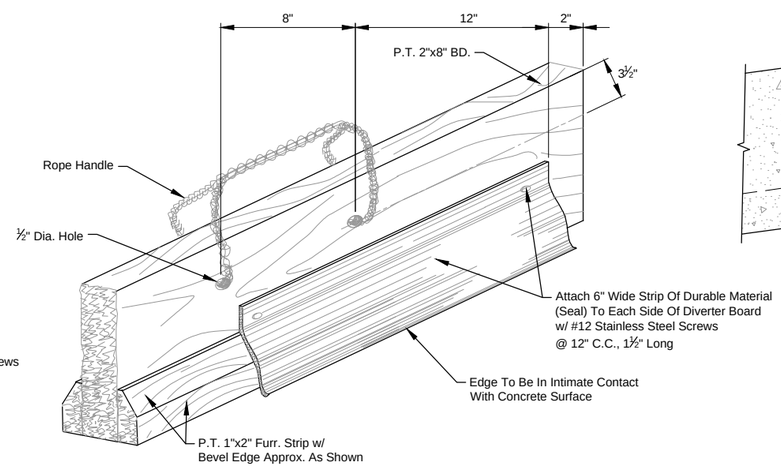

DETAIL-H
n.t.s.

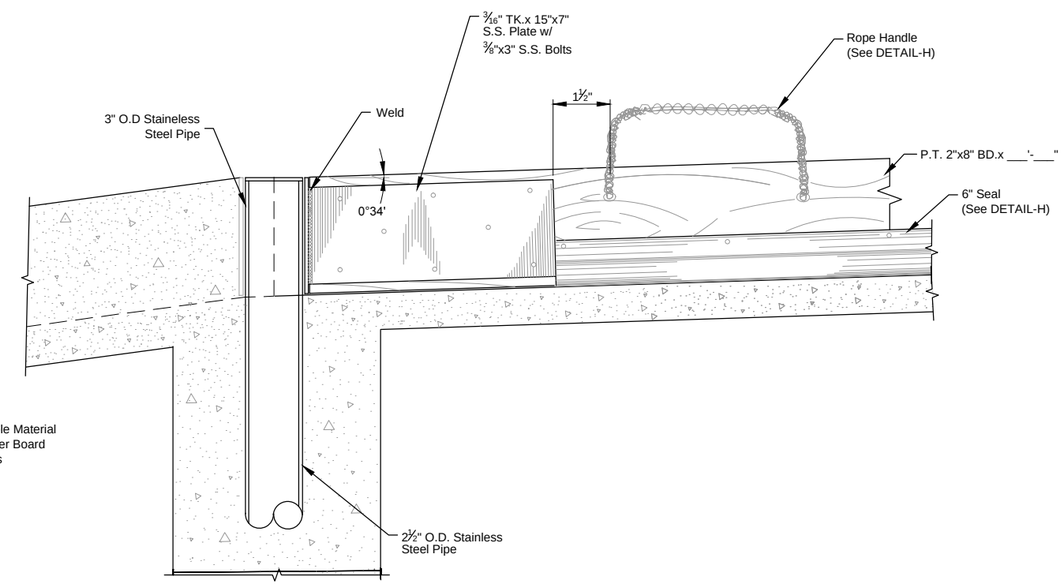

SECTION E-E
n.t.s.

Manure Solids Separator with Lined Waterway Inlet- Inlet Details

Standard DWG. No. FL-632A4

Date | Sheet 4 of 4

Revisions		
Date	Approved	Title

Date

Designed

Drawn

Checked

Approved

Manure Solids Separator
with Lined Waterway Inlet- Inlet Details

United States Department of Agriculture
Natural Resources Conservation Service

File No.
FL-632A.dwg

Drawing No.

Sheet 4 of 4