ANIMAL MORTALITY FACILITY
GEORGIA STANDARD DRAWINGS, 16 FOOT SIDE SHED COMPOSTER
6" X 6" POST CONSTRUCTION

1. *THE FOLLOWING DRAWINGS WERE PREPARED IN ACCORDANCE WITH PRACTICE CODES 316–ANIMAL MORTALITY FACILITY, 561 – HEAVY USE AREA, 367 – ROOFS AND COVERS AND GEORGIA BUILDING CODE (INTERNATIONAL BUILDING CODE 2006)*

2. *DESIGN DATA REQUIRED BY IBC 2006:*
   - *A) ROOF LIVE LOAD – 20 PSF.*
   - *B) BASIC WIND SPEED OF 90 MPH AND GROUND SNOW LOAD OF 10 PSF OR BASIC WIND SPEED OF 120 MPH AND NO SNOW LOAD.*
   - *C) IMPORTANCE FACTOR, I=0.87*
   - *D) WIND EXPOSURE CATEGORY C.*
   - *E) INTERNAL PRESSURE COEFFICIENT = 0.55*

3. *USE HURRICANE STRAP AS REQUIRED BY WIND ZONE REGION SHOWN BELOW.*

4. *THIS DESIGN IS NOT INTENDED FOR CONSTRUCTION ON AN ISOLATED HILL, RIDGE, OR ESCARPMENT IN ANY REGION OF THE STATE.*

5. *ANY CHANGES TO THESE DRAWINGS MUST BE APPROVED BY AN ENGINEER WITH JOB APPROVAL LEVEL IV OR GREATER.*

6. *NO ADDITIONS SHOULD BE MADE TO STRUCTURE WITHOUT APPROVAL FROM NRCS.*

7. *THESE DRAWINGS MUST BE SITE SPECIFIC TO ACCOUNT FOR WASTE PRODUCTION VALUES; LENGTH MUST BE DETERMINED.*

NOTE: THIS FACILITY SHALL BE CONSTRUCTED AS AN EXTENSION OF ANY GEORGIA NRCS STANDARD STACKING FACILITY WITH MAXIMUM POST HEIGHT OF 14 FOOT (12 FOOT FOR PS4). THIS DESIGN IS NOT A STANDALONE PRODUCT. THESE DRAWINGS SHALL BE ATTACHED TO GEORGIA POULTRY DRY STACK DRAWINGS: ga-eng-313-ps1.pdf, ga-eng-313-ps2.pdf, ga-eng-313-ps3.pdf, OR ga-eng-313-ps4.pdf

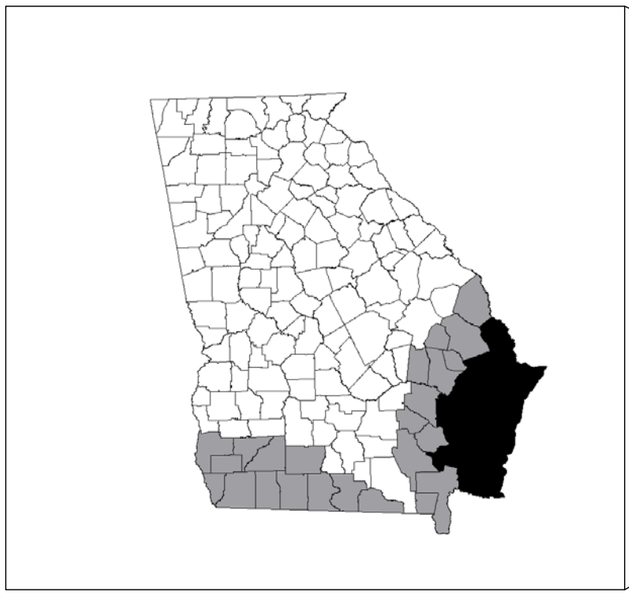

SITE LOCATION MAP

THIS DESIGN IS INTENDED FOR USE IN COUNTIES SUBJECT TO HURRICANE WIND LOADS UP TO 110 MPH SHADED GRAY ABOVE. DO NOT USE THIS DESIGN FOR COUNTIES SHADED BLACK. COUNTIES SHADED BLACK ARE SUBJECT TO 120 MPH WIND LOADS.

UNITED STATES DEPARTMENT OF AGRICULTURE
NATURAL RESOURCES CONSERVATION SERVICE
HELPING PEOPLE HELP THE LAND

_____ ANIMAL MORTALITY FACILITY

_____ COUNTY, GEORGIA

PRE–CONSTRUCTION CERTIFICATION:

THE _____ ANIMAL MORTALITY FACILITY HAS BEEN CONSTRUCTED IN ACCORDANCE WITH THE FOLLOWING DRAWINGS AND PRACTICE CODES 316, 367, AND 561. ALL CHANGES HAVE BEEN APPROVED BY AN ENGINEER WITH JOB APPROVAL AUTHORITY LEVEL IV OR GREATER. ALL ADDITIONS HAVE BEEN APPROVED BY NRCS.

OWNER	DATE	NRCS REPRESENTATIVE	DATE	ENGINEER (IF REQUIRED)	DATE

AS–BUILT CERTIFICATION:

THIS PRACTICE HAS BEEN CONSTRUCTED IN ACCORDANCE TO THESE PLANS AND MEETS NRCS STANDARDS AND SPECIFICATIONS.

NRCS REPRESENTATIVE	DATE	ENGINEER (IF REQUIRED)	DATE

ANIMAL MORTALITY FACILITY:	HEAVY USE AREA:	ROOFS AND COVERS:
JOB CLASS: _____	JOB CLASS: _____	JOB CLASS: _____

INDEX TO DRAWINGS:

SHEET 1 - COVER SHEET

SHEET 2 - PLAN VIEW
ELEVATION VIEW
FRONT VIEW
GENERAL NOTES

SHEET 3 - GIRDER AND RAFTER TO POST CONNECTIONS
HURRICANE STRAP
HURRICANE CLIP
RAFTER HANGAR

SHEET 4 - WOOD TREATMENT TABLE
FIBER REINFORCED CONTRACTION JOINT
CONCRETE POST FOOTING DETAIL
MECHANICAL POST ANCHOR CONCRETE POST FOOTING DETAIL
STANDARD BIN FRONT-TOP VIEW

GEORGIA811 Utilities Protection Center, Inc.

REVISIONS

DATE	APPROVED	TITLE
09/05	H. MCFARLAND	STATE ENGINEER
09/07	H. MCFARLAND	STATE ENGINEER
06/11	J. HOLLOWAY	STATE ENGINEER
07/13	D. ROBERTS	ACTING STATE ENGINEER
06/16	D. GUTHRIE	STATE ENGINEER

		Date
Approved		
Checked		
Designed (Length)		
Designed	W. Brown	09/07
Drawn	W. Brown, H. McFarland	09/07
Checked	J. Holloway	09/07
Approved	H. McFarland	09/07

ANIMAL MORTALITY FACILITY
16' Side Shed
Composting Facility Extension

NRCS
Natural Resources Conservation Service
United States Department of Agriculture

File No.
ga-eng-316-c3_rev_062016

Drawing No.
Cover

July 2013

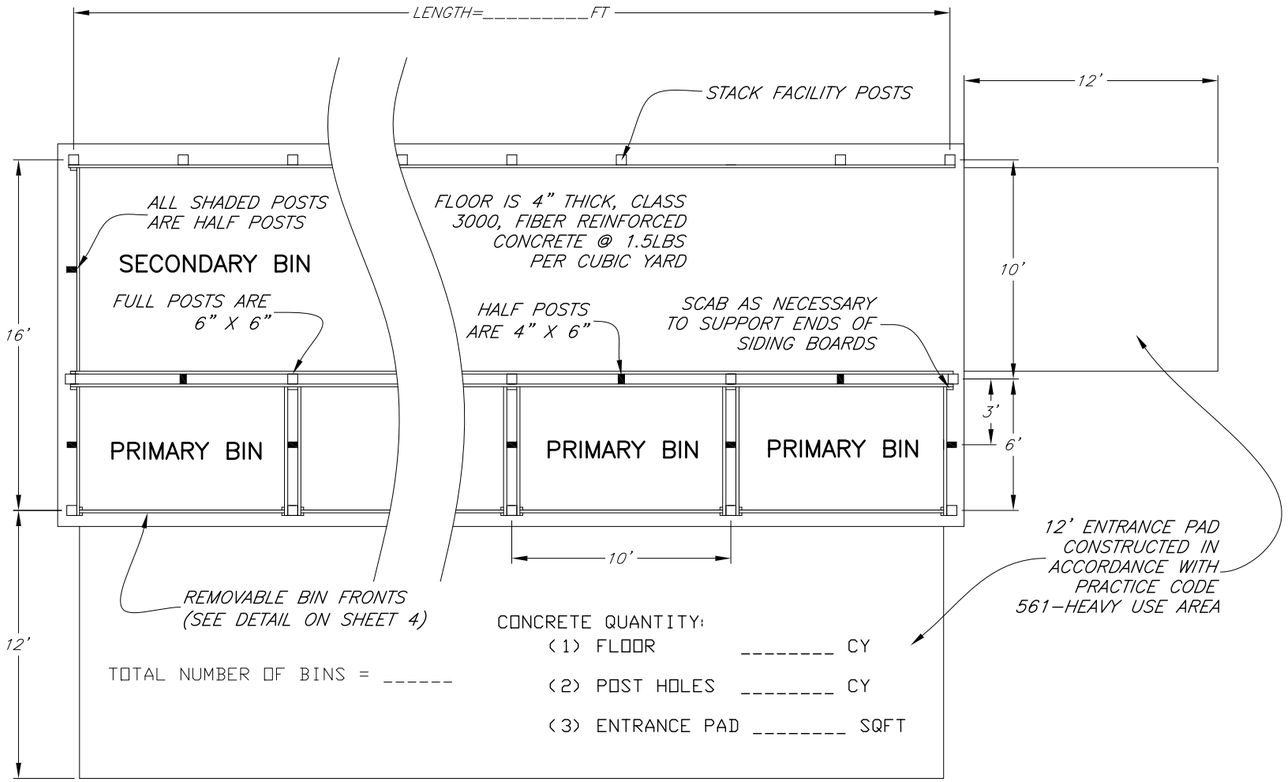

PLAN VIEW

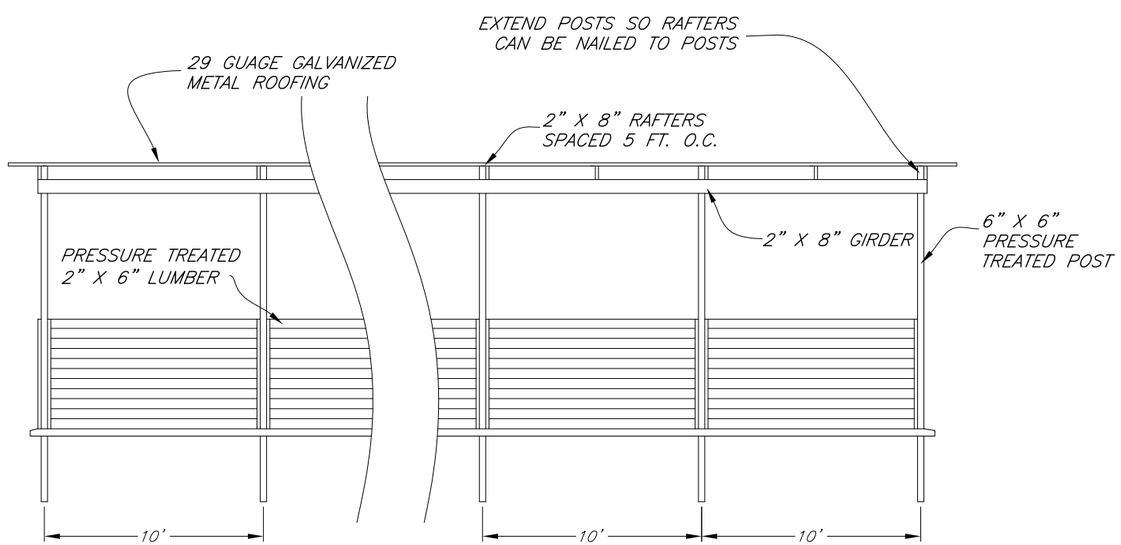

FRONT VIEW

NOTES:

1. ALL ENTRANCE AREAS SHALL BE STABILIZED USING PRACTICE STANDARD 561 – HEAVY USE AREA.
2. ALL POSTS SHALL BE SET IN CONCRETE WITH CONCRETE OR GRAVEL FOOTING PAD (SEE CONCRETE POST FOOTING DETAIL ON SHEET 4).
3. THE BUILDING SITE SHALL BE CLEARED AND GRUBBED AS REQUIRED. PROPER DRAINAGE SHALL BE PROVIDED AROUND THE ENTIRE BUILDING SO THAT RUNOFF WATER DOES NOT ENTER OR POND NEAR BUILDING. DESIGN FOR ROOF RUNOFF IN ACCORDANCE WITH PRACTICE CODE 558 – ROOF RUNOFF MANAGEMENT OR STABILIZE SOIL AROUND BUILDING USING PRACTICE CODE 342 – CRITICAL AREA PLANTING.
4. CONCRETE FLOORS AND FOOTINGS SHALL BE PLACED ON FIRM SOIL. ALL LOOSE SOIL SHALL BE REMOVED. IF FILL MATERIAL IS USED, PLACE IN 9" THICK LAYERS AND COMPACT WITH SHEEPSFOOT ROLLER OR OTHER EQUIVALENT COMPACTION METHOD.
5. ALL LUMBER, INCLUDING THE POSTS, IN CONTACT WITH LITTER, COMPOST, OR CONCRETE SHALL BE PRESSURE TREATED (SEE WOOD TREATMENT TABLE ON SHEET 4).
6. ALL DIMENSION LUMBER SHALL BE SOUTHERN PINE NO. 2 OR BETTER.
7. ALL NAILS, BOLTS, AND OTHER CONNECTORS SHALL BE OF HOT-DIPPED ZINC COATED GALVANIZED STEEL, STAINLESS STEEL, SILICON BRONZE, OR COPPER. NAILS SHALL HAVE SPIRALED OR RINGED (ANNULAR) SHANKS. ALL REFERENCES TO "GALVANIZED" IN THIS SET OF DRAWINGS REFERS TO THE ABOVE LISTED COATINGS.
8. ROOFING SHALL BE 29 GUAGE GALVANIZED METAL. INSTALL ACCORDING TO MANUFACTURER SPECIFICATIONS. SEALANT SHALL BE APPLIED TO ALL LAPS.
9. ON SITE WATER SOURCE IS NECESSARY TO MAINTAIN MOISTURE CONTENT OF COMPOST.
10. ALL DISTURBED AREAS SHALL BE VEGETATED USING PRACTICE CODE 342 – CRITICAL AREA PLANNING.
11. CALL BEFORE YOU DIG: 811, 1-800-282-7411 OR 770-623-4344.

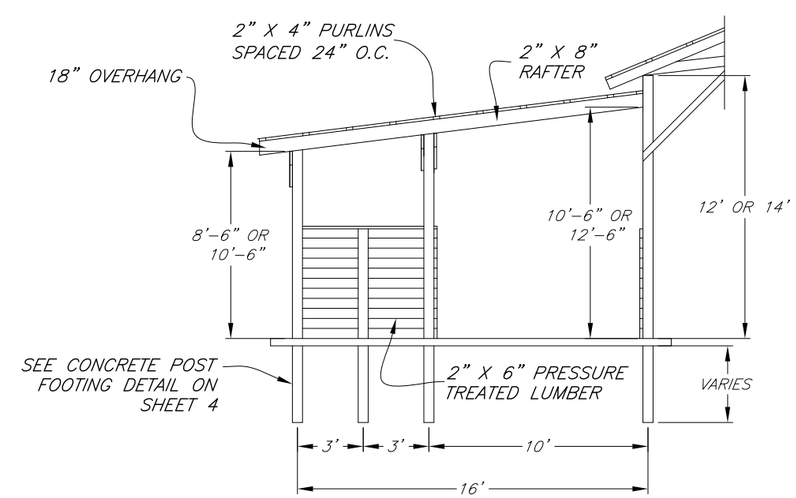

ELEVATION VIEW

REVISIONS		
DATE	APPROVED	TITLE
09/05	H MCFARLAND	STATE ENGINEER
09/07	H MCFARLAND	STATE ENGINEER
07/13	D ROBERTS	ACTING STATE ENGINEER

		Date
Designed	W. Brown	09/07
Drawn	S. Rogers, W. Brown, H. McFarland	09/07
Checked	J. Holloway	09/07
Approved	H. McFarland	09/07

ANIMAL MORTALITY FACILITY
16' Side Shed
Composting Facility Extension

NRCS
Natural Resources Conservation Service
United States Department of Agriculture

File No.
ga-eng-316-c3_rev_062016

Drawing No.
Plan

July 2013

Sheet 2 of 4

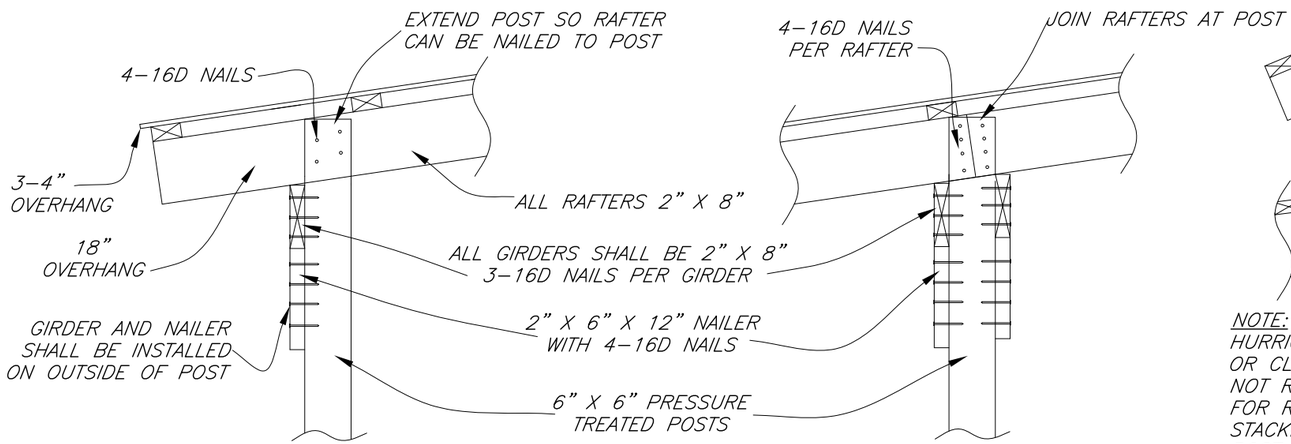

OUTSIDE POST

MIDDLE POST

NOTE:
HURRICANE STRAP IS NOT SHOWN TO ALLOW VIEW OF NAILING DETAILS

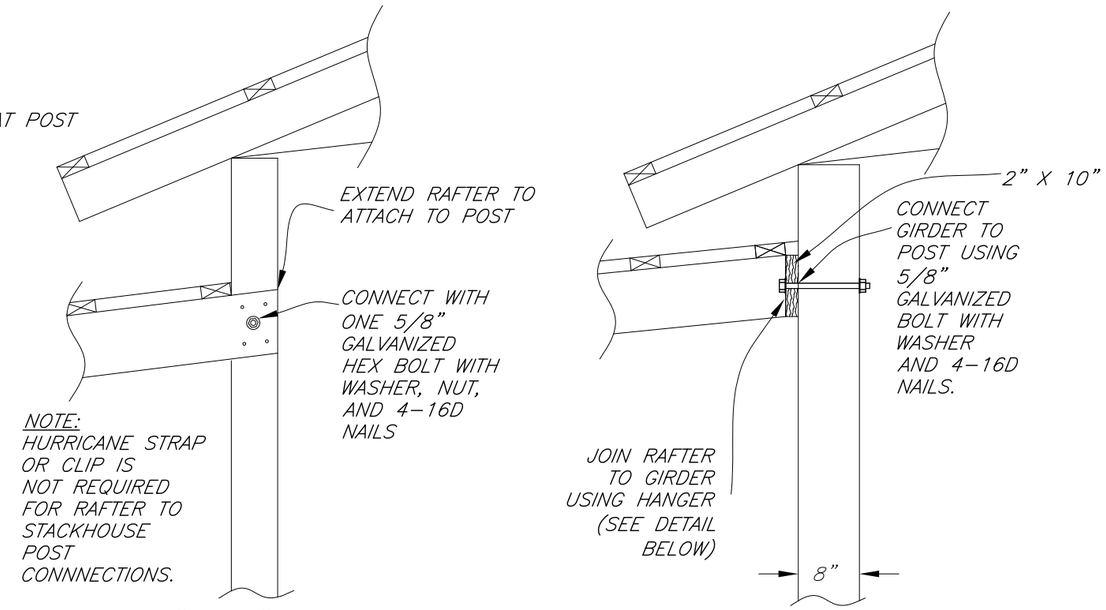

NOTE:
HURRICANE STRAP OR CLIP IS NOT REQUIRED FOR RAFTER TO STACKHOUSE POST CONNNECTIONS.

6" X 6" POST

6" X 8" POST

GIRDER AND RAFTER TO POST CONNECTIONS

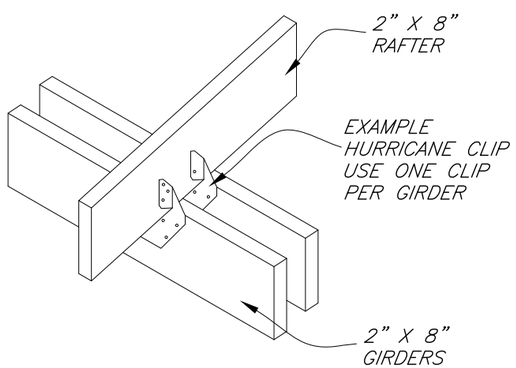

HURRICANE CLIP
(USE AT ALL RAFTER TO GIRDER CONNECTIONS WITHOUT POSTS)

NOTES:

1. USE MANUFACTURED HURRICANE STRAP FOR RAFTER TO GIRDER CONNECTIONS WITH POSTS. MINIMUM UPLIFT RESISTANCE IS:

   (A) FOR 90-100 MPH =1211 LBS.
   (B) FOR 110 MPH =1371 LBS.
   (C) FOR 120 MPH =1825 LBS.

2. ALL STRAPS SHALL BE 2" OR WIDER. CENTER STRAP ON RAFTER TO RAFTER BUTT JOINTS ON CENTER POSTS.

3. USE MANUFACTURED HURRICANE CLIP FOR RAFTER TO GIRDER CONNECTIONS (WITHOUT POSTS). MINIMUM UPLIFT RESISTANCE IS 398 LBS PER CLIP. AN EXAMPLE IS SHOWN AT LEFT.

4. ALL STRAPS AND CLIPS SHALL BE INSTALLED ACCORDING TO MANUFACTURER'S SPECIFICATIONS.

5. MANUFACTURER'S SPECIFICATIONS SHALL BE PROVIDED TO NRCS.

6. ONLY ONE GIRDER AND ONE CLIP ARE NECESSARY FOR OUTSIDE POSTS.

7. WHERE GIRDERS MEET IN A BUTT JOINT AT THE POST, 2-5/8" HEX BOLTS WITH WASHER & AND NUT, ONE THROUGH EACH GIRDER, WILL BE USED TO FASTEN GIRDERS TO THE POST.

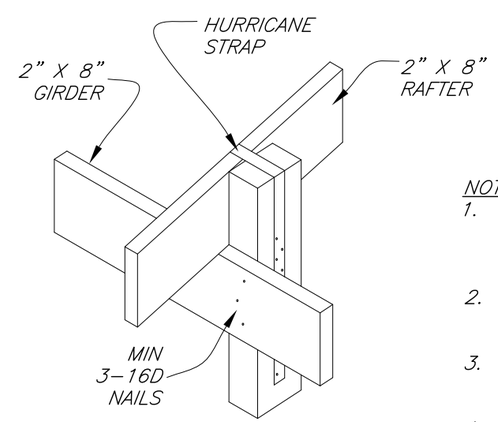

HURRICANE STRAP
(USE AT ALL RAFTER TO GIRDER CONNECTIONS WITH POSTS)

NOTE:

1. MINIMUM REQUIRED CAPACITY FOR HANGER IS 346 LBS.
2. MINIMUM UPLIFT RESISTANCE IS 384 LBS.
3. EXAMPLE HANGER IS SHOWN AT RIGHT.
4. INSTALL ACCORDING TO MANUFACTURER'S SPEFICATIONS SHALL BE PROVIDED TO NRCS

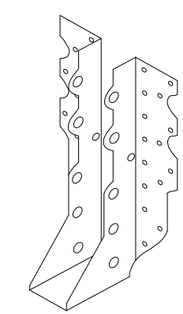

RAFTER HANGER

REVISIONS		
DATE	APPROVED	TITLE
09/05	H MCFARLAND	STATE ENGINEER
09/07	H MCFARLAND	STATE ENGINEER
07/13	D ROBERTS	ACTING STATE ENGINEER

		Date
Designed	W. Brown	09/07
Drawn	S. Rogers, W. Brown, H. McFarland	09/07
Checked	J. Holloway	09/07
Approved	H. McFarland	09/07

ANIMAL MORTALITY FACILITY
16' Side Shed
Composting Facility Extension

NRCS
Natural Resources Conservation Service
United States Department of Agriculture

File No.
ga-eng-316-c3_rev_062016

Drawing No.
Detail 1

July 2013
Sheet 3 of 4

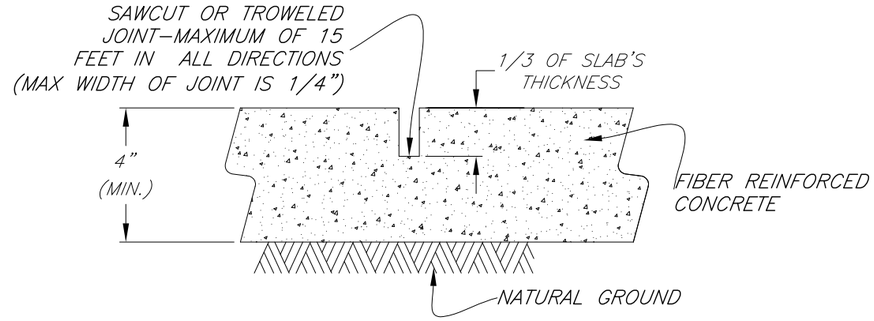

FIBER REINFORCED CONTRACTION JOINT

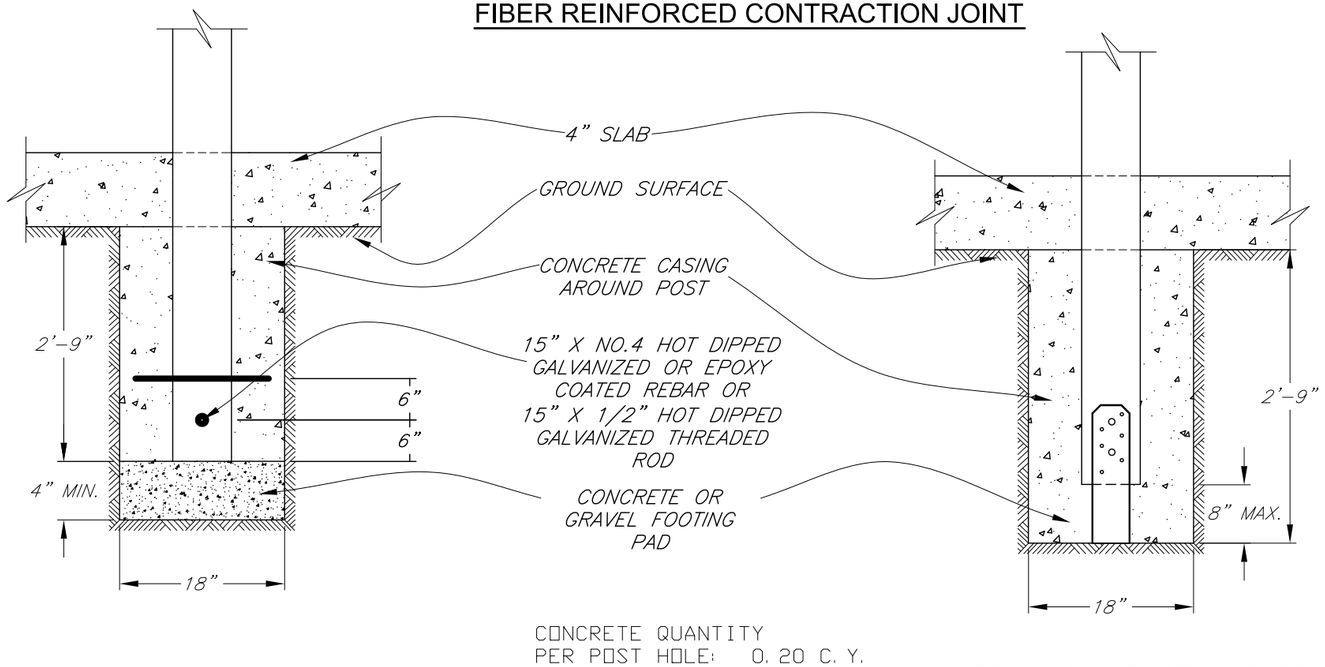

CONCRETE POST FOOTING DETAIL

MECHANICAL POST ANCHOR CONCRETE FOOTING DETAIL

NOTES:

1. EXAMPLE CONNECTOR SHOWN AT LEFT.
2. MINIMUM UPLIFT RESISTANCE REQUIRED IS 2761 LBS.
3. INSTALL ACCORDING TO MANUFACTURER'S SPECIFICATIONS.
4. CONNECTOR SHALL BE GALVANIZED.
5. MECHANICAL POST ANCHOR MAY BE USED INSTEAD OF REBAR.
6. REBAR AND MECHANICAL POST ANCHOR REQUIRED FOR FULL POST ONLY.

WOOD TREATMENT TABLE

MINIMUM RETENTION RATES IN PCF					
USE	CCA	ACQ-C/D	CBA-A	CA-B	MCA
GROUND CONTACT OR FRESH WATER	0.40	0.40	0.41	0.21	0.15
IMPORTANT STRUCTURAL MEMBERS	0.60	0.60	0.61	0.31	0.23

CCA - CHROMATED COPPER ARSENATE
ACQ-C/D - ALKALINE COPPER QUATERNARY
CBA-A & CA-B - COPPER AZOLE
MCA - MICRONIZED COPPER AZOLE

NOTES:

1. ALL WOODEN WALLS, HALF POSTS, AND BIN FRONT WOOD SHALL MEET THE GROUND CONTACT RATES.
2. ALL SUPPORT POSTS SHALL MEET THE IMPORTANT STRUCTURAL MEMBER RATES.

NOTE:
OPTIONAL QUICK RELEASE BIN PLANS ARE AVAILABLE. SEE YOUR NRCS REPRESENTATIVE FOR DETAILS.

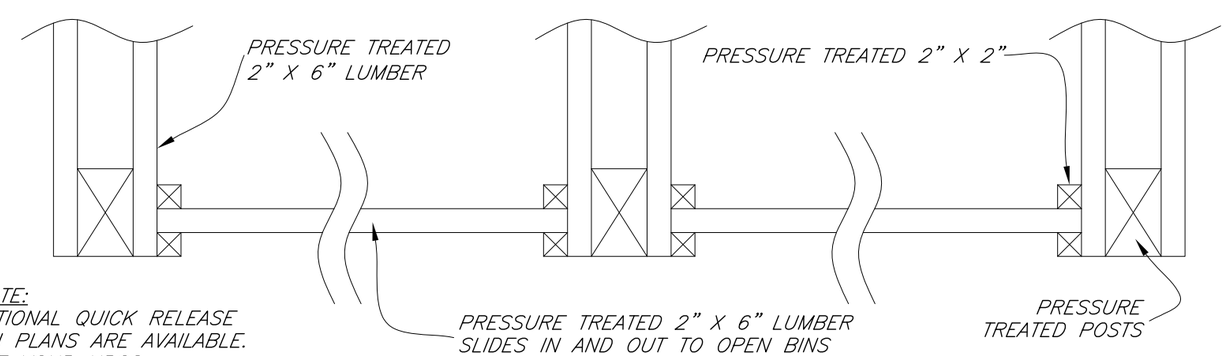

STANDARD BIN FRONT - TOP VIEW

REVISIONS		
DATE	APPROVED	TITLE
09/05	H. MCFARLAND	STATE ENGINEER
09/07	H. MCFARLAND	STATE ENGINEER
10/10	J. HOLLOWAY	STATE ENGINEER
07/13	D. ROBERTS	ACTING STATE ENGINEER

		Date
Designed	W. Brown	09/07
Drawn	S. Rogers, W. Brown, H. McFarland	09/07
Checked	J. Holloway	09/07
Approved	H. McFarland	09/07

ANIMAL MORTALITY FACILITY
16' Side Shed
Composting Facility Extension

NRCS
Natural Resources Conservation Service
United States Department of Agriculture

File No.
ga-eng-316-c3_rev_062016

Drawing No.
Detail 2

July 2013