ANIMAL MORTALITY FACILITY
GEORGIA STANDARD DRAWINGS
COMPOSTER EXTENSION AT REAR OF STACKING FACILITY
FOUR DEEP COMPOSTING BINS, 5-FOOT POST SPACING

1. *THE FOLLOWING DRAWINGS WERE PREPARED IN ACCORDANCE WITH PRACTICE CODES 316–ANIMAL MORTALITY FACILITY, 561 – HEAVY USE AREA, 367 – ROOFS AND COVERS AND GEORGIA BUILDING CODE (INTERNATIONAL BUILDING CODE 2006)*
2. *ANY CHANGES MADE TO THESE DRAWINGS MUST BE APPROVED BY AN ENGINEER WITH JOB APPROVAL LEVEL IV OR GREATER.*
3. *THIS FACILITY IS DESIGNED TO SUSTAIN 90 MPH WINDS WITH 10 PSF SNOW LOAD OR 110 MPH WINDS WITH NO SNOW LOAD.*
4. *NO ADDITIONS SHOULD BE MADE TO STRUCTURE WITHOUT APPROVAL FROM NRCS.*
5. *THESE DRAWINGS MUST BE SITE SPECIFIC TO ACCOUNT FOR WASTE PRODUCTION VALUES; LENGTH MUST BE DETERMINED.*

NOTE: THIS FACILITY SHALL BE CONSTRUCTED AS AN EXTENSION OF GEORGIA NRCS STANDARD STACKING FACILITY WITH 5-FOOT POST SPACING. THIS DESIGN IS NOT A STAND ALONE PRODUCT. THESE DRAWINGS SHALL BE ATTACHED TO GEORGIA POULTRY DRY STACK DRAWINGS: ga-eng-313-ps1.pdf, ga-eng-313-ps4.pdf, ga-eng-317-hs1.pdf, OR ga-eng-317-hs3.pdf

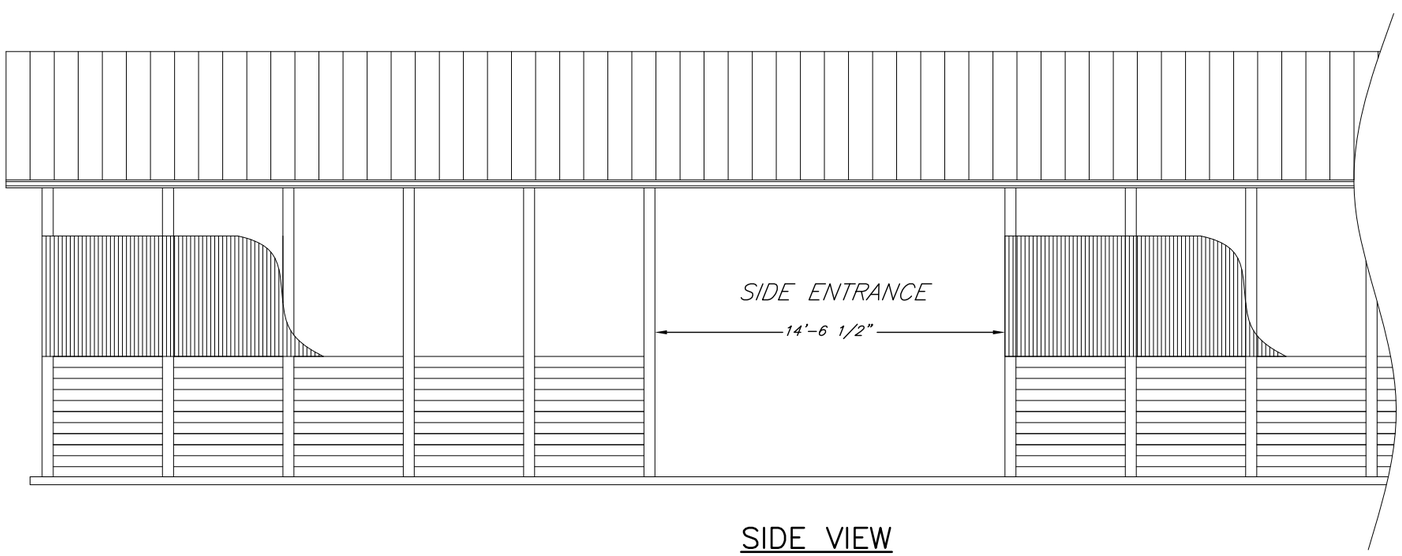

SIDE VIEW

UNITED STATES DEPARTMENT OF AGRICULTURE
NATURAL RESOURCES CONSERVATION SERVICE
HELPING PEOPLE HELP THE LAND

_____ ANIMAL MORTALITY FACILITY

_____ COUNTY, GEORGIA

PRE–CONSTRUCTION CERTIFICATION:

THE _____ ANIMAL MORTALITY FACILITY HAS BEEN CONSTRUCTED IN ACCORDANCE WITH THE FOLLOWING DRAWINGS AND PRACTICE CODES 316, 367, AND 561. ALL CHANGES HAVE BEEN APPROVED BY AN ENGINEER WITH JOB APPROVAL AUTHORITY LEVEL IV OR GREATER. ALL ADDITIONS HAVE BEEN APPROVED BY NRCS.

OWNER	DATE	NRCS REPRESENTATIVE	DATE	ENGINEER (IF REQUIRED)	DATE

AS–BUILT CERTIFICATION:

THIS PRACTICE HAS BEEN CONSTRUCTED IN ACCORDANCE TO THESE PLANS AND MEETS NRCS STANDARDS AND SPECIFICATIONS.

NRCS REPRESENTATIVE	DATE	ENGINEER (IF REQUIRED)	DATE

ANIMAL MORTALITY FACILITY:	HEAVY USE AREA:	ROOFS AND COVERS:
JOB CLASS: _____	JOB CLASS: _____	JOB CLASS: _____

INDEX TO DRAWINGS:

SHEET 1 – COVER SHEET
SIDE VIEW

SHEET 2 – PLAN VIEW

SHEET 3 – SIDE ENTRANCE
BIN WALL AND POST EMBEDMENT
CONCRETE POST FOOTING DETAIL
MECHANICAL POST ANCHOR CONCRETE FOOTING DETAIL

SHEET 4 – GIRDER HANGER
TRUSS TO POST CONNECTION
TRUSS TO HEADER BEAM CONNECTION

GEORGIA 811 Utilities Protection Center, Inc.

REVISIONS

DATE	APPROVED	TITLE
09/05	H MCFARLAND	STATE ENGINEER
10/07	H MCFARLAND	STATE ENGINEER
06/11	J HOLLOWAY	STATE ENGINEER
07/13	D ROBERTS	ACTING STATE ENGINEER
06/16	D GUTHRIE	STATE ENGINEER

		Date
Approved		
Checked		
Designed (Length)		
Designed	W. Brown	10/07
Drawn	S. Rogers H. McFarland	10/07
Checked	J. Holloway	10/07
Approved	H. McFarland	10/07

ANIMAL MORTALITY FACILITY
REAR COMPOSTER EXTENSION
Four Deep Composting Bins, 5' Post Spacing

NRCS
Natural Resources Conservation Service
United States Department of Agriculture

File No.
ga–eng–316–c4_rev_062016

Drawing No.
Cover

July 2013

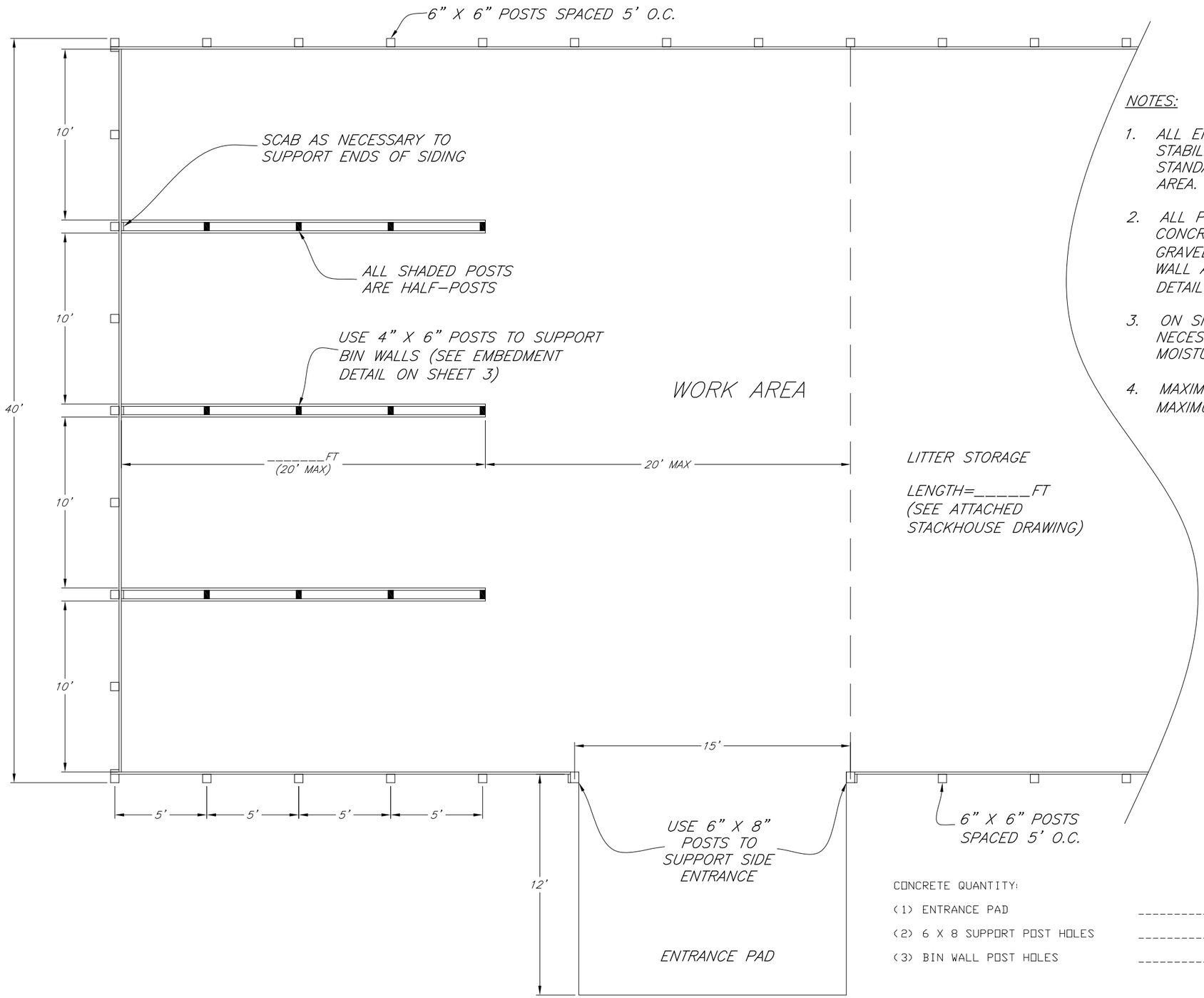

NOTES:

1. ALL ENTRANCE PADS SHALL BE STABILIZED USING PRACTICE STANDARD 561 – HEAVY USE AREA.
2. ALL POSTS SHALL BE SET IN CONCRETE WITH CONCRETE OR GRAVEL FOOTING PAD (SEE BIN WALL AND POST EMBEDMENT DETAIL ON SHEET 3).
3. ON SITE WATER SOURCE IS NECESSARY TO MAINTAIN MOISTURE CONTENT OF COMPOST.
4. MAXIMUM BIN LENGTH IS 20'. MAXIMUM WORK AREA IS 20'.

CONCRETE QUANTITY:

(1) ENTRANCE PAD	_____SQFT
(2) 6 X 8 SUPPORT POST HOLES	_____CY
(3) BIN WALL POST HOLES	_____CY

PLAN VIEW

REVISIONS		
DATE	APPROVED	TITLE
09/05	H MCFARLAND	STATE ENGINEER
10/07	H MCFARLAND	STATE ENGINEER
07/13	D ROBERTS	ACTING STATE ENGINEER

		Date
Designed	W. Brown	10/07
Drawn	S. Rogers H. McFarland	10/07
Checked	J. Holloway	10/07
Approved	H. McFarland	10/07

ANIMAL MORTALITY FACILITY
REAR COMPOSTER EXTENSION
Four Deep Composting Bins, 5' Post Spacing

NRCS
Natural Resources Conservation Service
United States Department of Agriculture

File No.
ga-eng-316-c4_rev_062016

Drawing No.
Plan

July 2013

Sheet 2 of 4

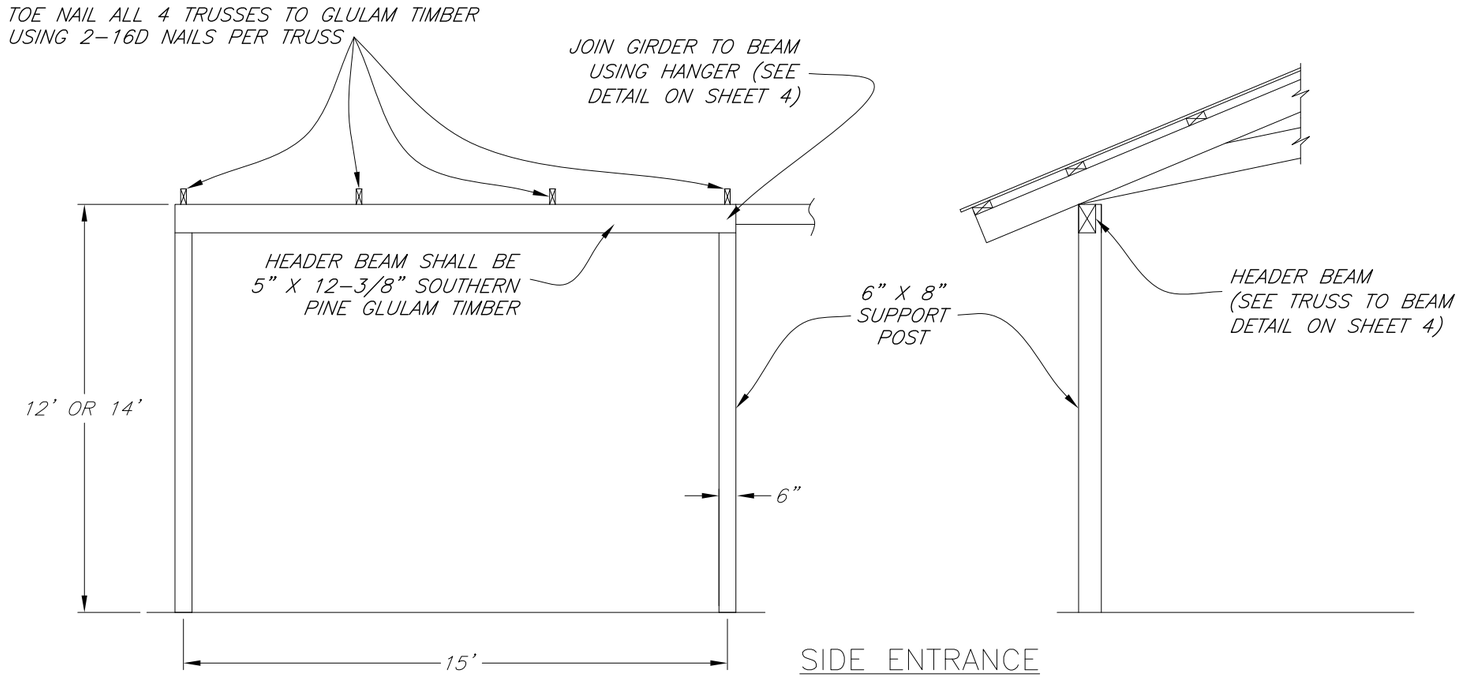

SIDE ENTRANCE

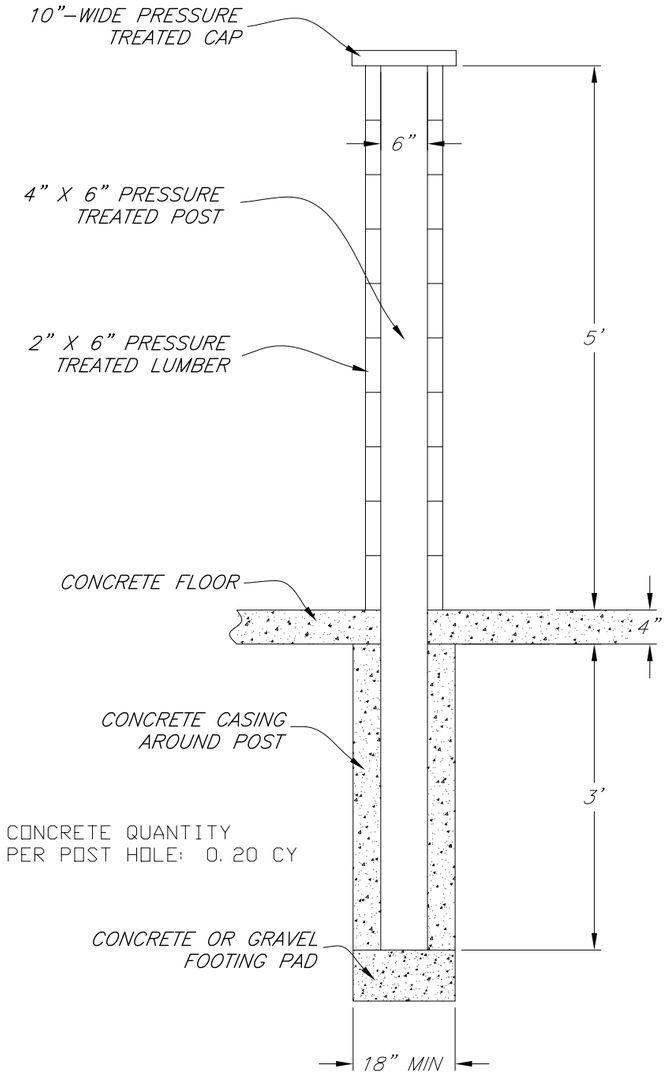

BIN WALL AND POST EMBEDMENT

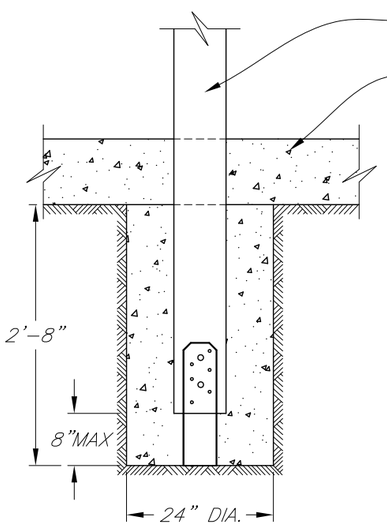

NOTES:

1. EXAMPLE CONNECTOR SHOWN AT LEFT.
2. MINIMUM UPLIFT RESISTANCE REQUIRED IS 3291 LBS.
3. INSTALL ACCORDING TO MANUFACTURER'S SPECIFICATIONS.
4. CONNECTOR SHALL BE GALVANIZED.

MECHANICAL POST ANCHOR CONCRETE FOOTING DETAIL

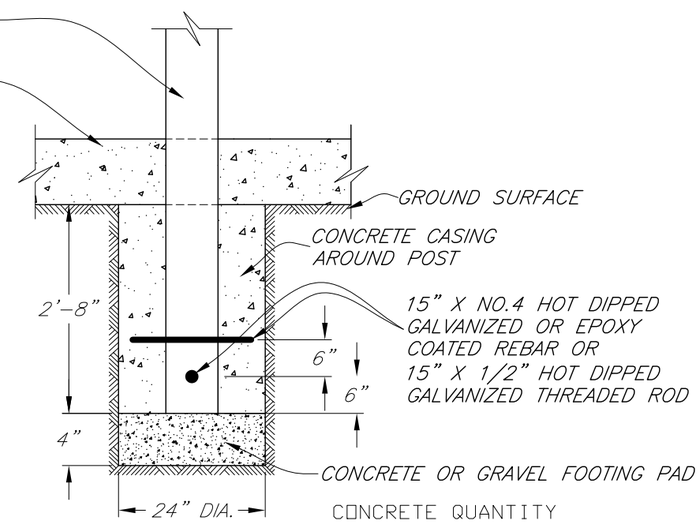

CONCRETE QUANTITY PER POST HOLE: 0.30 C.Y.

CONCRETE POST FOOTING DETAIL

WOOD TREATMENT TABLE

MINIMUM RETENTION RATES IN PCF					
USE	CCA	ACQ-C/D	CBA-A	CA-B	MCA
GROUND CONTACT OR FRESH WATER	0.40	0.40	0.41	0.21	0.15
IMPORTANT STRUCTURAL MEMBERS	0.60	0.60	0.61	0.31	0.23

CCA - CHROMATED COPPER ARSENATE
ACQ-C/D - ALKALINE COPPER QUATERNARY
CBA-A & CA-B - COPPER AZOLE
MCA - MICRONIZED COPPER AZOLE

NOTES:

1. ALL WOODEN WALLS, HALF POSTS, AND BIN FRONT WOOD SHALL MEET THE GROUND CONTACT RATES.
2. ALL SUPPORT POSTS SHALL MEET THE IMPORTANT STRUCTURAL MEMBER RATES.

REVISIONS		
DATE	APPROVED	TITLE
09/05	H MCFARLAND	STATE ENGINEER
10/07	H MCFARLAND	STATE ENGINEER
10/10	J HOLLOWAY	STATE ENGINEER
07/13	D ROBERTS	ACTING STATE ENGINEER

		Date
Designed	W. Brown	10/07
Drawn	S. Rogers H. McFarland	10/07
Checked	J. Holloway	10/07
Approved	H. McFarland	10/07

ANIMAL MORTALITY FACILITY
REAR COMPOSTER EXTENSION
Four Deep Composting Bins, 5' Post Spacing

NRCS
Natural Resources Conservation Service
United States Department of Agriculture

File No.
ga-eng-316-c4_rev_062016

Drawing No.
Detail 1

July 2013

Sheet 3 of 4

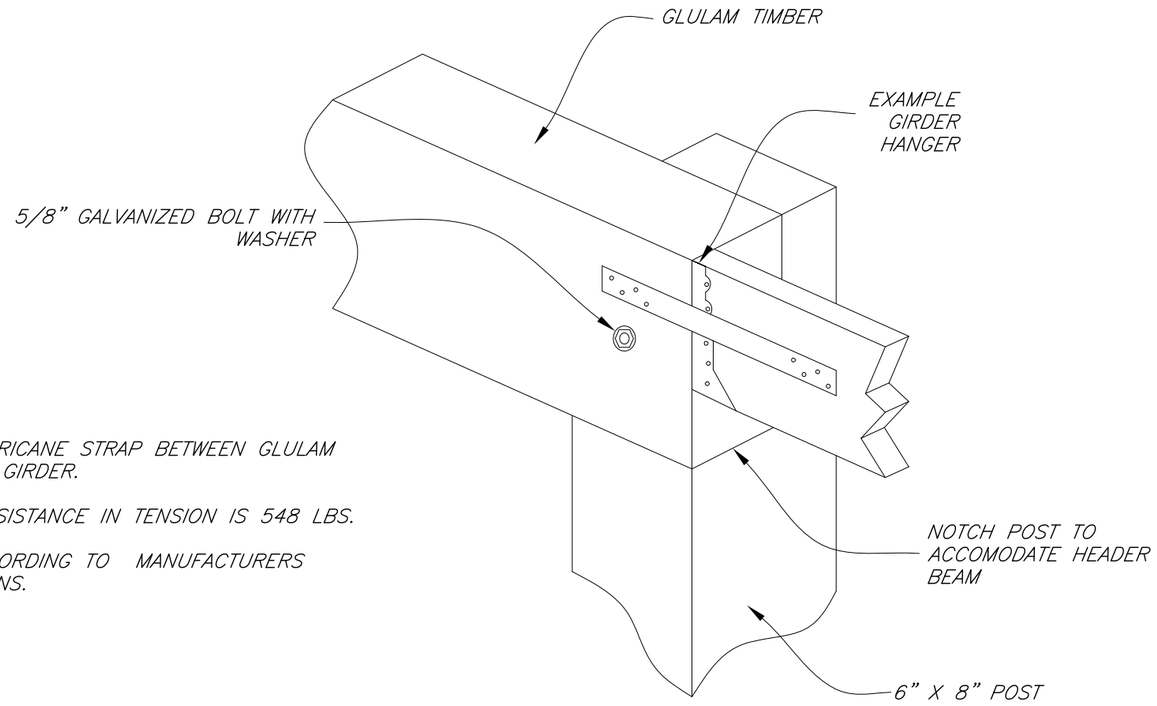

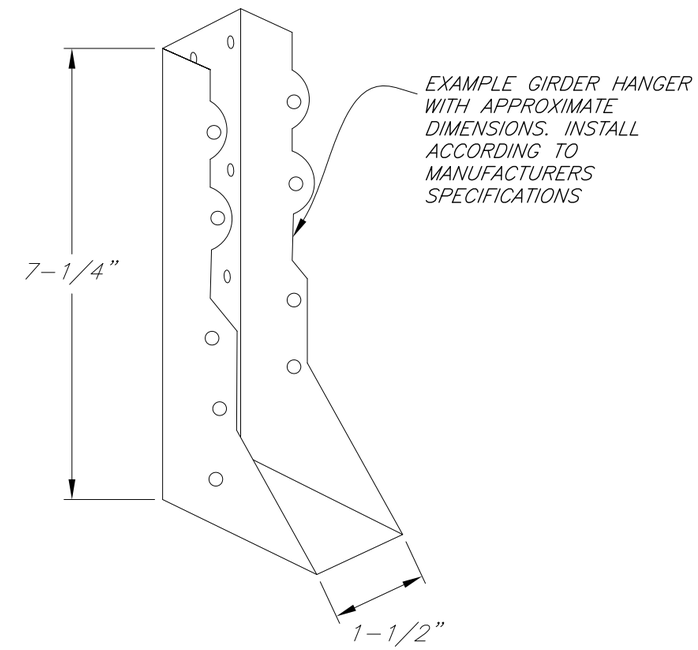

NOTES:

1. INSTALL HURRICANE STRAP BETWEEN GLULAM TIMBER AND GIRDER.
2. MINIMUM RESISTANCE IN TENSION IS 548 LBS.
3. INSTALL ACCORDING TO MANUFACTURERS SPECIFICATIONS.

GIRDER HANGER

NOTES:

1. USE HURRICANE STRAP AT POST TO HEADER BEAM CONNECTION.
2. MINIMUM UPLIFT RESISTANCE IS 2025 LBS.
3. USE 16 GUAGE, GALVANIZED, 2-1/16" WIDE COILED STRAP OR STRAP TIE AS SHOWN AT LEFT FOR POST TO TRUSS CONNECTION.
4. STRAP SHALL BE FABRICATED FROM STEEL COMPLYING WITH ASTM A 653-96 SS GRADE 40 SPECIAL.

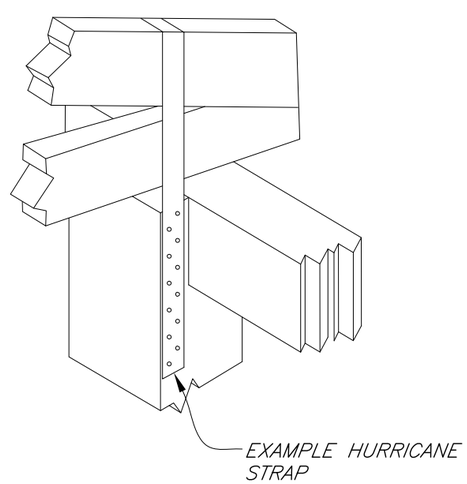

TRUSS TO POST CONNECTION

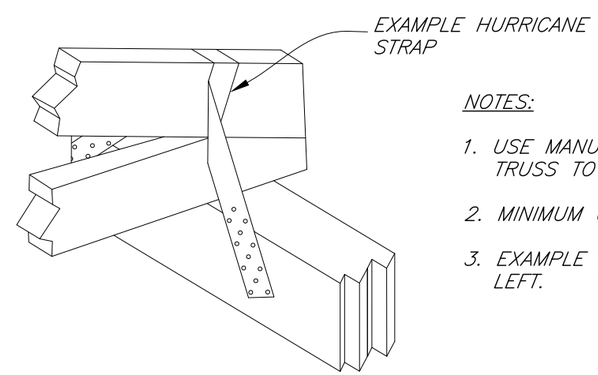

NOTES:

1. USE MANUFACTURED HURRICANE STRAPS AT TRUSS TO HEADER BEAM CONNECTIONS.
2. MINIMUM UPLIFT RESISTANCE IS 1218 LBS.
3. EXAMPLE HURRICANE STRAP IS SHOWN AT LEFT.

TRUSS TO HEADER BEAM CONNECTION

REVISIONS		
DATE	APPROVED	TITLE
09/05	H MCFARLAND	STATE ENGINEER
10/07	H MCFARLAND	STATE ENGINEER
07/13	D ROBERTS	ACTING STATE ENGINEER

		Date
Designed	W. Brown	10/07
Drawn	S. Rogers H. McFarland	10/07
Checked	J. Holloway	10/07
Approved	H. McFarland	10/07

ANIMAL MORTALITY FACILITY
REAR COMPOSTER EXTENSION
Four Deep Composting Bins, 5' Post Spacing

NRCS
Natural Resources Conservation Service
United States Department of Agriculture

File No.
ga-eng-316-c4_rev_062016

Drawing No.
Detail 2

July 2013

Sheet 4 of 4