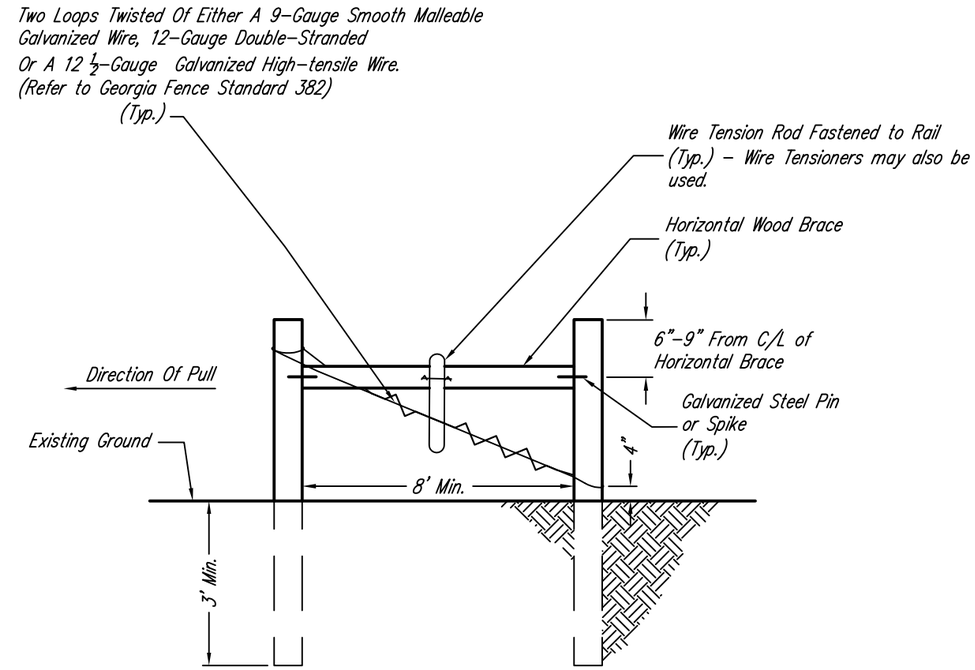

FIG 1.1 SINGLE H-BRACE END POST DETAIL
Not to Scale

Notes for Floating Brace:

- *Use 1-5/8" dia. galvanized tubing or 4" dia. wood. Landscape timbers are not permitted.*
- *Use 10" spike nail or brace pin at connection to post.*
- *Use 15" min. disc blade or flat stone as shown.*
- *Tension wire is 12.5 gauge High Tensile*
- *Notch brace member 3/8" at lower end to accept tension wire*
- *Cinch tension wires both directions with wire or crimping sleeve.*

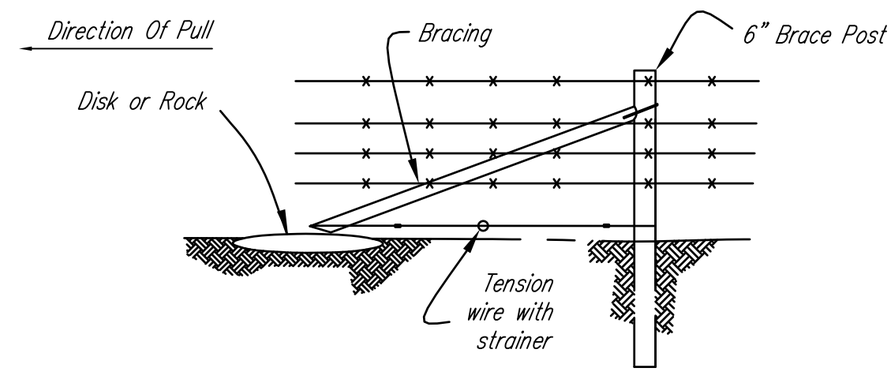

FIG 1.2 FLOATING BRACE
Not to Scale

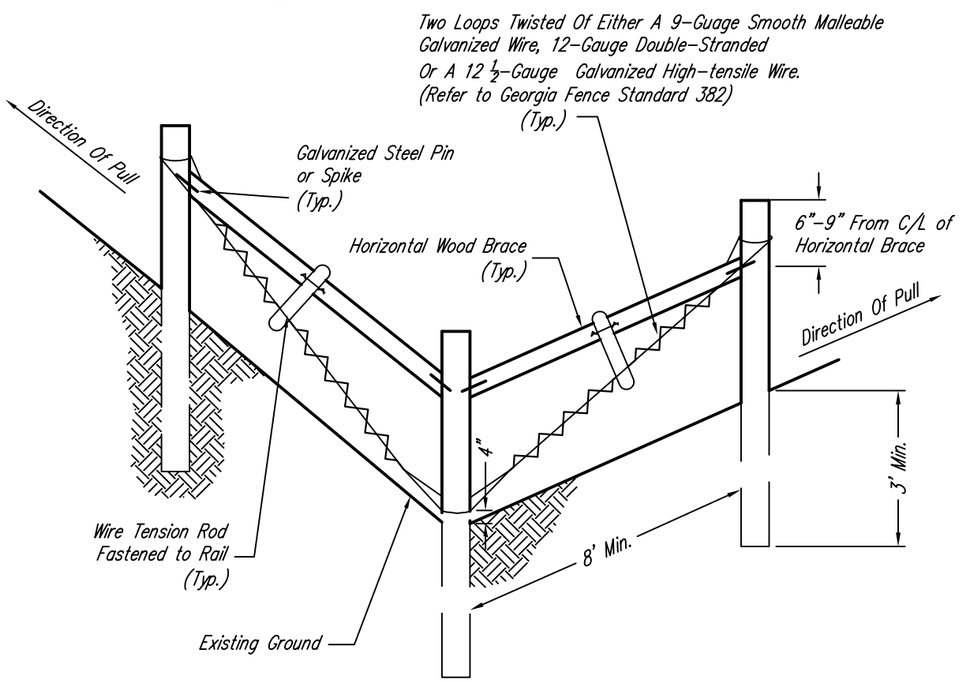

FIG 1.3 SINGLE H-BRACE CORNER DETAIL
Not to Scale

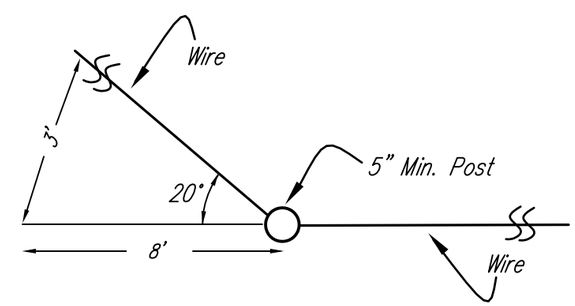

FIG 1.4 TOP VIEW - 20° OR LESS CORNER DETAIL
Not to Scale

Use a double H-brace corner post assembly for any angle where fence alignment changes more than 20 degrees.

File Name	Drawing Name	09/27/2016 (rev)
GA_Fen_1	GA_Fen_1.dwg	Sheet 1 of 3

FENCING - GEORGIA

SINGLE H-BRACE

NRCS
Natural Resources Conservation Service
United States Department of Agriculture

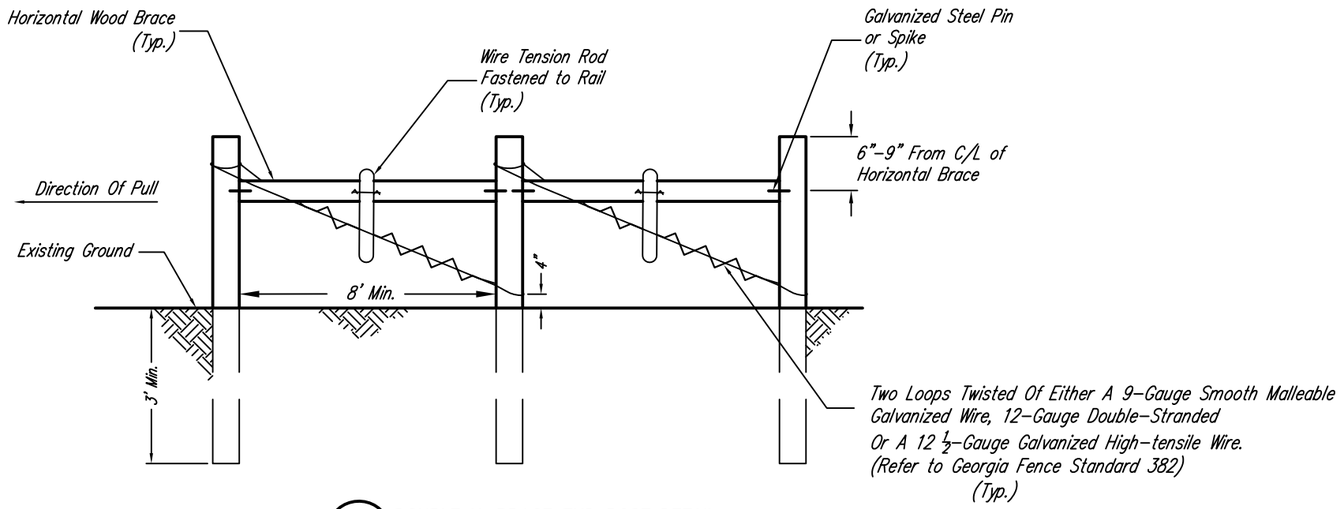

FIG 2.1 DOUBLE H–BRACE END POST DETAIL
Not to Scale

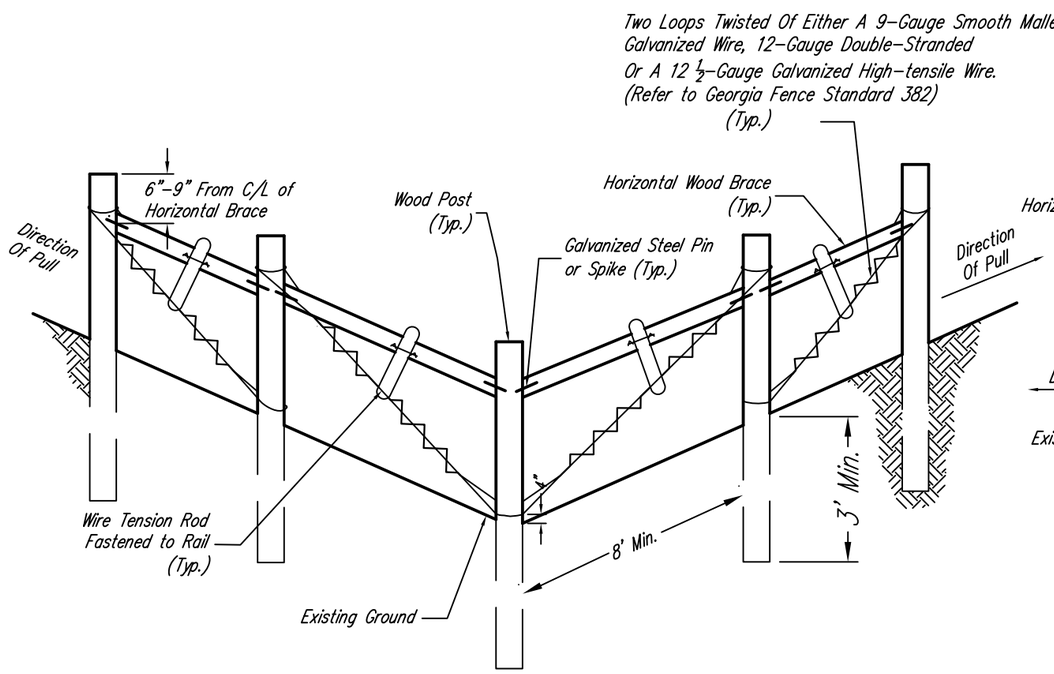

FIG 2.2 DOUBLE H–BRACE CORNER DETAIL
Not to Scale

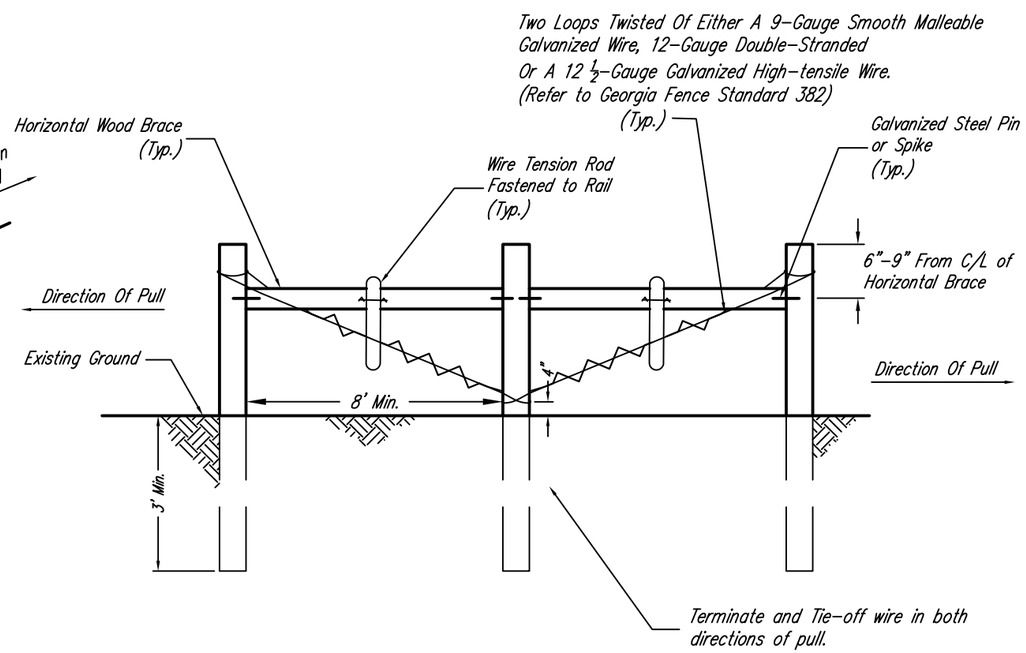

FIG 2.3 DOUBLE H–BRACE PULL ASSEMBLY DETAIL
Not to Scale

File Name
GA_Fen_2

Drawing Name
GA_Fen_2.dwg

09/27/2016 (rev.)
Sheet 2 of 3

FENCING – GEORGIA

DOUBLE H–BRACE

NRCS
Natural Resources Conservation Service
United States Department of Agriculture

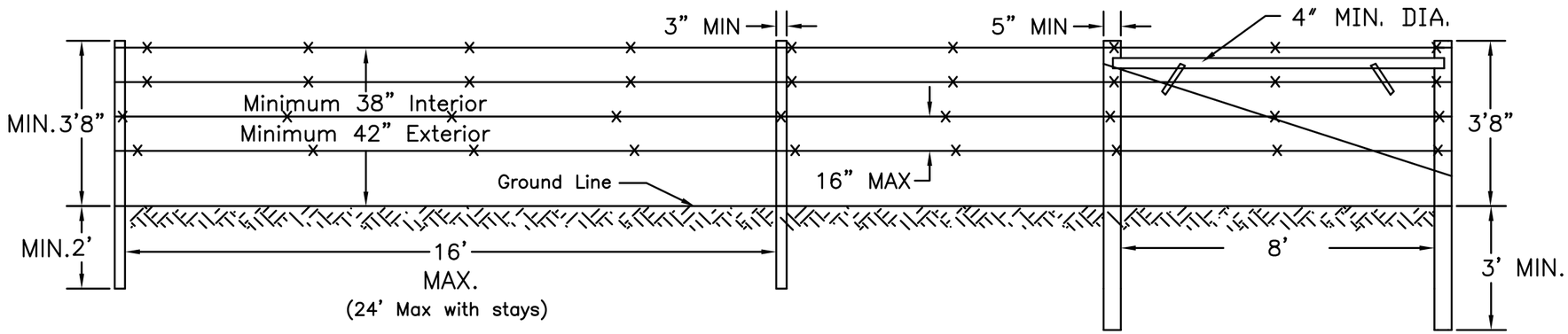

FIG 3.1 TYPICAL BARBED WIRE FENCE

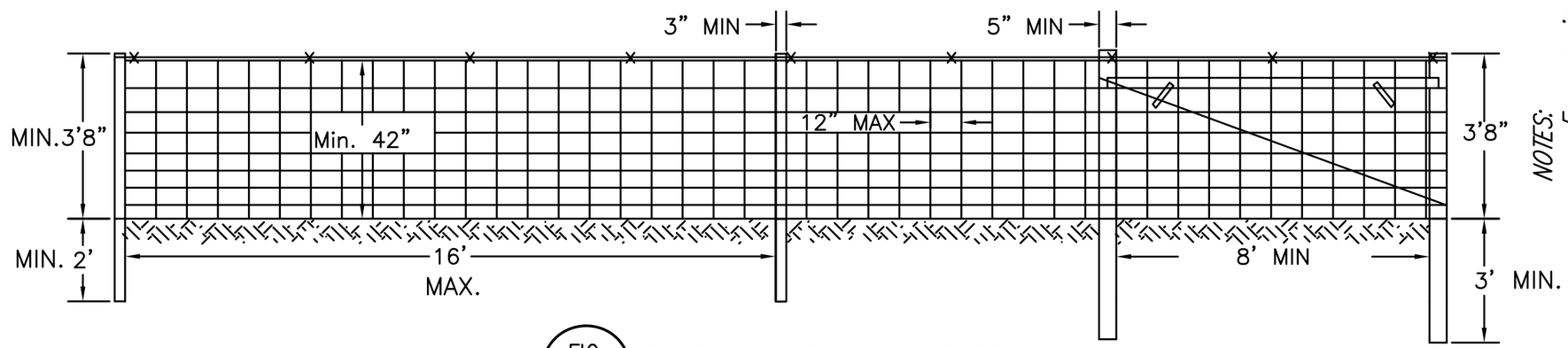

FIG 3.2 TYPICAL WOVEN WIRE FENCE

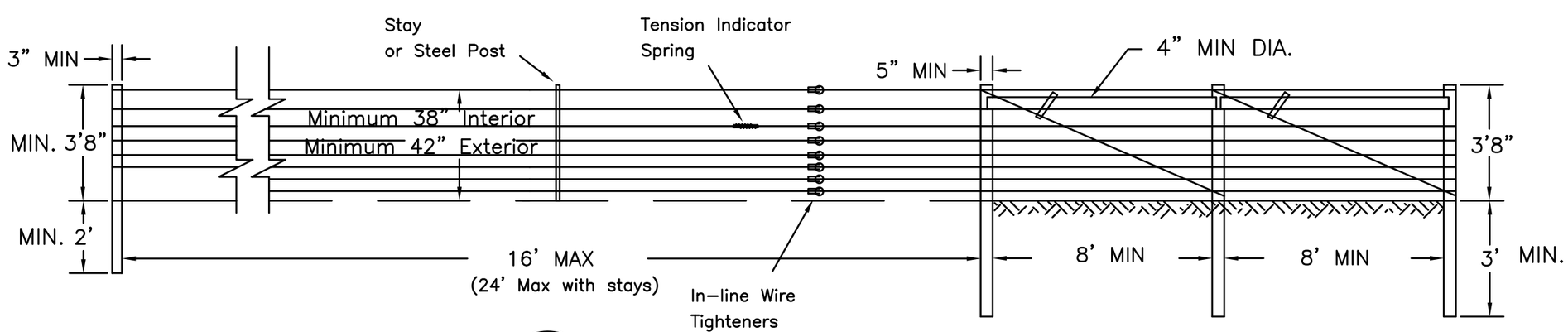

FIG 3.3 TYPICAL HIGH TENSILE FENCE (NON-ENERGIZED)

FOR ENERGIZED FENCE SEE NOTE FOR WIRE SPACING

NOTES:

- *For energized high tensile fence interior wire spacing shall be based on animal of interest.*
- *Steel posts can be used instead of wood line posts. See Georgia Fence Standard – Code 382 for specifications.*
- *Refer to Fence Standard – Code 382 for material and construction details.*
- *Drawings are not to scale.*

File Name	Drawing Name	09/27/2016 (rev.)
GA_Fen3	GA_Fen3.dwg	Sheet 3 of 3

FENCING – GEORGIA

BARBED, WOVEN, & HIGH-TENSILE

NRCS
Natural Resources Conservation Service
United States Department of Agriculture