CHAPTER 17. CONSTRUCTION AND CONSTRUCTION MATERIALS

Compiled by: William R. Stanley, Construction Engineer, SCS, Portland, Ore.

Contents

	Page
General	17-1
Definition	17-1
Introduction	17-1
Surveys for Construction	17-1
Detail and Accuracy	17-1
Methods and Documentation	17-2
Consultation with the Contractor and the Owner	17-2
Earthwork	17-3
Excavation	17-3
Foundation Preparation	17-3
Clearing and Grubbing	17-3
Stripping	17-3
Scarifying	17-4
Compaction	17-4
Preparing Rock Surfaces	17-4
Cutoff Trench	17-5
Channels	17-5
Trenches	17-5
Borrow Areas	17-5
Embankment and Structure Backfill	17-6
Dams and Dikes	17-6
Quality of Materials	17-6
Control of Moisture	17-6
Loading and Placing	17-7
Compaction	17-7
Density	17-8
Structure Backfill	17-8
Finish and Cleanup	17-8
Concrete	17-9
Characteristics and Performance	17-9
Materials	17-9
Cement	17-9
Water	17-10
Aggregates	17-10

Page

Air Entrainment 17-11
Proportioning the Mix 17-11
Water-Cement Ratio 17-12
Allowing for Moisture in the Aggregates 17-12
Size and Gradation of Aggregates 17-13
Consistency 17-13
Control of Job Mix 17-14
Mixing 17-14
Placing 17-14
Consolidation 17-15
Construction of Joints 17-15
Contraction and Expansion Joints 17-16
Finishing Concrete 17-16
Form Removal 17-17
Repair of Concrete 17-17
Curing Concrete 17-18
Requirements for Hot Weather 17-19
Requirements for Cold Weather 17-20
Form Construction 17-21
Materials 17-21
Fabrication Requirements 17-21
Form Design 17-21
Method of Assembly 17-22
Treatment of Surfaces 17-22

Steel Reinforcement 17-25
Purpose 17-25
Materials 17-25
Kinds 17-25
Quality 17-25
Size 17-25
Onsite Storage 17-25
Bending Drawings 17-26
Placing 17-26
Positioning 17-26
Coverage 17-26
Laps 17-26
Embedded Items 17-27
Anchors 17-27
Dowels 17-27
Anchorage and Supports 17-27
Inspection 17-27
Prior to Placing Concrete 17-27
While Placing Concrete 17-28

Structure Drainage and Control of Water 17-28
Purpose 17-28
Materials 17-28

Page

Sand, Gravel, or Rock 17-28
Perforated Pipe 17-28
Weep Holes 17-28
Type of Drains 17-29
Earth Dams 17-29
Toe Drains 17-29
Blanket Drains 17-29
Trench Drains 17-29
Concrete Structures 17-29
Subgrade Blanket 17-29
Perforated Drainpipe 17-29
Weep Holes 17-29
Installation 17-29
Filter Materials 17-29
Perforated Pipe 17-31
Weep Holes 17-31
Site Dewatering and Control of Water 17-31
Foundations 17-31
Dams and Dikes 17-31
Concrete Structures 17-32
Borrow Areas 17-32
Diversions 17-32

Pipe Conduits 17-32
Materials 17-32
Handling and Storage 17-32
Installation 17-33
Trenching 17-33
Earth Excavation 17-33
Rock Excavation 17-33
Bedding 17-33
Earth 17-33
Granular Material 17-33
Concrete Bedding 17-33
Concrete Cradles 17-33
Jointing 17-34
Premolded Gasket 17-34
Bell and Spigot 17-34
Sleeve Joints 17-34
Cement Mortar 17-34
Bell and Spigot 17-34
Tongue and Groove 17-34
Banding 17-34
Curing 17-35
Welding 17-35
Bolted Couplers 17-35
Open Joints 17-35
Backfill 17-36
Quality of Materials 17-36

Page

Placement 17-36
Compaction 17-36

Water Control Gates and Valves 17-36
Kinds 17-36
Slide Gates 17-36
Flap Gates 17-36
Irrigation Control Gates 17-37
High Pressure Valves 17-37
Low Pressure Valves 17-37
Quality and Acceptance 17-37
Standard Brand Names 17-37
Reference Specifications 17-37
Manufacturer's Certification 17-38
Visual Inspection 17-38
Onsite Handling and Storage 17-38
Installation 17-38
Anchor Bolts 17-38
Field Assembly 17-38
Valves 17-38
Slide Gates 17-39
Automatic Flap Gates 17-39
Adjusting and Testing 17-39
Operation and Maintenance 17-39
Overstressing 17-39
Surface Coatings 17-39
Protection From Fire 17-40
Lubrication 17-40

Metalwork 17-40
Materials 17-40
Steel Shapes 17-40
Steel Pipe 17-40
Bolts 17-40
Kinds of Installations 17-41
Trash and Debris Racks 17-41
Guard Rails 17-41
Other Structure Components 17-41
Workmanship and Assembly 17-41
Cutting and Fitting 17-41
Bolted Connections 17-41
Welding 17-42
Anchorage 17-42
Surface Protection 17-42
Paint 17-42
Galvanizing 17-42

Page

Grout 17-51
Adaptability 17-51
Loose Rock Riprap 17-51
Grouted Rock Riprap 17-51
Installation 17-51
Foundation Requirements 17-51
Shaping Earthwork 17-52
Placing Rock 17-52
Placing Grout and Protection 17-52

Figures

Figure 17-1 Typical form assembly 17-24
Figure 17-2 Type of structure drains 17-30

Tables

Table 17-1 Concrete pressure per square foot of form 17-21
Table 17-2 Spacing data for form lumber and form ties 17-23

CHAPTER 17. CONSTRUCTION AND CONSTRUCTION MATERIALS

1. GENERAL

DEFINITION

Construction is the act of putting together the various parts of, and installing, structures or measures according to approved plans and specifications.

INTRODUCTION

Each employee at the work unit level who has responsibility for practice layout and inspection should know:

1. The basic principles required for acceptable structure installation.

2. The types and quality of materials commonly used in the construction of conservation practices.

3. Methods and procedures for installing earthwork, concrete, reinforcing steel, pipe, watergates, metalwork, woodwork, masonry, and rock riprap.

4. State Standards and Specifications and policy requirements.

2. SURVEYS FOR CONSTRUCTION

DETAIL AND ACCURACY

Even the simplest installation requires layout and stakes to control the work. The amount of staking required is related to the kind and complexity of the work, and the facilities and experience of the builder.

The actual location of the stakes should be determined by:

1. The ease of access and use by the builder in installing the work.

2. The availability for use in checking during construction.

3. Permanence during the period of installation.

The importance of accuracy in taking off dimensions, elevations, or other layout data from the drawings, and the actual field layout cannot be overstressed. Errors in construction layout may result in extra cost to the owner and embarrassment to the technician.

The technician making the layout should always check the drawings; check the field layout, including markings on the stakes; and recheck all field note computations.

Do not take shortcuts to save time.

METHODS AND DOCUMENTATION

Detailed survey procedures for structure layouts and the format for documenting the field notes for the many kinds of installations that are common to farm conservation practices is beyond the scope of this chapter.

Surveying equipment, kinds of surveys, and documentation of field notes are outlined in Chapter 1 of this manual.

Procedures for individual practice layout and field note documentation are also set forth in various chapters of this manual. Follow standard Service policy for recording engineering survey notes.

Suggested procedures for construction layout and documentation of field notes for the more complex construction projects can also be found in the SCS National Engineering Handbook, Section 19, Chapter 2 (1).

Technicians responsible for layout and inspection should become familiar with the requirements and suggested procedures given in the above reference. Standardization of the construction layout is important to accuracy, understanding, and saving of time.

CONSULTATION WITH THE CONTRACTOR AND THE OWNER

Construction stakes are set for the use of the party doing the construction. Prior to making the construction layout, an effort should be made to consult with the contractor and get his suggestions as to what stakes he would prefer and how they should be marked.

After the work is staked and prior to starting construction, it is good procedure for the technician to familiarize the contractor with the location of all the stakes, how they are marked, datums or structure limits represented, and what stakes are to be protected during the work. At this time any special requirements or critical conditions that pertain to the job can be discussed. It is general policy to allow the contractor latitude in planning and executing the work. However, the technician should know the requirements in the drawings and specifications, and if specified methods or materials are required the contractor should understand these details.

This review also presents a good occasion to discuss the quality of work or finish that will be required. If the contractor is informed of what will be acceptable workmanship, it will help him carry out the work and avoid complications and disagreements.

It is desirable that the owner of the facility or his representative be a party to the preconstruction review of the job. The technician should always keep the owner informed and obtain his approval prior to any action taken with the contractor that might increase the cost or change the scope of the installation.

3. EARTHWORK

EXCAVATION

Foundation Preparation

Clearing and Grubbing

Construction sites often support trees, brush, and other woody growth including large roots that require removal prior to further excavation or placing fill.

The degree of clearing and grubbing required in the initial operation is related to the kind of structure being installed. The drawings for the project should outline the limits, the kind and depth of removal and the method of disposal. The contractor should be shown the limits of the work as staked on the ground, including any trees that are to remain or require special protection.

It should be determined that:

1. The limits for clearing and grubbing are clearly marked.

2. All materials are removed and disposed of as required.

3. The contractor's operations do not damage adjacent property.

4. Adequate care is taken to protect the safety of the public.

Stripping

Stripping excavation consists of removal of materials that are unsuitable for structure foundations. This is a common requirement for the construction of dams, dikes, and similar water-impounding embankments. These excavations consist of removing surface soils which contain vegetation and root growth. They may also include soils that, due to inherent or wet conditions, will not support the structure. The removal of all unsuitable materials is emphasized to insure the stability and safety of the structure. If the technician is not confident of the quality of the exposed foundation material, he should request engineering assistance from his supervisor.

Some important check items are:

1. Make sure the limits for stripping are staked in the field.

2. Take preconstruction cross sections when required for yardage payments.

3. See that all unsuitable materials are removed and disposed of as required.

4. Determine if provisions for controlling surface water and dewatering the foundation area are necessary.

Scarifying

Scarifying or loosening the foundation surface area for embankments, under certain conditions, improves the bond between the embankment and the foundation materials. The depth of the scarifying should be limited to 6 inches or less to insure satisfactory blending and compaction of the first lift of the embankment and the foundation. This operation is applicable primarily to fine grained soils that present a smooth slick surface after stripping. Scarifying is not applicable when the foundation consists primarily of coarse grained soils or stony material. Rock larger than 6 inches in diameter that is brought to the surface by the scarifier should be removed prior to placing embankment.

Compaction

Compaction of the foundation for embankment is desirable and often required, especially when fine grained soil materials predominate. Compaction should be delayed until the embankment construction is ready to start. The moisture content of the foundation should be similar to the requirements for the embankment. Equipment provided for compaction of the embankment should completely traverse the foundation area a sufficient number of trips to result in acceptable densities.

Uniform densities of foundation material for structures are essential. All soil materials added to replace over-excavation should be moistened, as required, and compacted to provide uniform support.

Preparing Rock Surfaces

It is important to get good bond between the impervious embankment and any extensive rock surface. The field operations should be carefully conducted to fulfill all the requirements of the drawings and specifications. Deep, abrupt irregularities and overhanging surfaces that are difficult to backfill should be removed. Keyways, trenches, and vertical abutments should be sloped and shaped to provide smooth contact for the embankment. Blasting in foundation areas is not recommended except in unusual situations, and then only under careful control of light charges. All loose rock and pervious materials should be removed from the rock surface. Semihard rock, such as shales, that break down when exposed should be left covered or protected from the elements until just before placing the embankment.

Rock foundations for structures, other than embankments, are commonly over-excavated and backfilled to grade. The amount and kind of backfill and the compaction should meet all the requirements for subgrade or bedding material.

Cutoff Trench

Cutoff trench excavation may be considered a continuation of the foundation preparation, and is often specified for earth embankments that impound water. The purpose is to provide a location for placing controlled embankment that will reduce the volume of seepage through the foundation of the embankment. The location of the trench should be as shown on the drawings. The depth should be as specified, or adjusted to the suitability of the exposed material in the excavation. The bottom width of the trench should be adequate for operating a carryall or scraper and compacting equipment. The trench sides should always be sloped 1:1 or flatter.

Channels

Channel construction and rehabilitation have application to various practices; i.e., stream channels, floodwater diversions, irrigation, and drainage. Designs for these practices are based on computed cross sections and grades. The project should be accurately staked in accordance with these designs, and the installation checked to determine that all requirements are met. Special attention should be given to the disposal of the excavated materials. Often provisions are included for the use of these materials in adjacent dikes or other embankments, requiring that specific selection and routing of the materials be followed. When excavated material is placed as waste adjacent to the channel, consideration should be given to the stability of the channel side slope. If during construction possible failure of the bank is indicated, the technician should immediately consult with his supervisor and the owner to determine the corrective action required. This may call for the use of a wider berm, placing the waste material at a shallower depth, or complete removal of the excavated material. All excavated surfaces should be constructed to line and grade with a uniform machine finish and waste material shaped in accordance with State Standards and Specifications

Trenches

Trench excavation relates primarily to the installation of pipelines, drain tile, and structure drainage systems. These excavations require field layout and inspection at critical points during construction. All trenches should be excavated to the required grade or specified over-excavation. Material removed from the trench should be placed a safe distance from the excavation to prevent excessive loading on the trench walls.

Borrow Areas

Borrow areas usually are necessary to supplement required excavations for the construction of dams and other items of earthwork. All borrow areas shown on the drawings should be staked in the field. The exact location of excavation in the borrow area and the requirements for mixing, routing of

equipment or other controls should be as specified or as directed by the technician. He should determine that the materials excavated are similar in quality to those considered in the design for the work. Materials that do not conform should not be used unless approved by the designer.

EMBANKMENT AND STRUCTURE BACKFILL

Dams and Dikes

Quality of Materials

The suitability and amount of materials for fill construction should be determined in the design phase with sufficient exploration and testing to insure that good materials are available at or near the site.

The technician should have knowledge of the Unified Soil Classification System, be able to identify soil groups in the field, and know which soils are suitable for constructing earth embankments. A discussion of procedures for field identification and adaptability of soils is presented in Chapter 4 of this manual. Additional information on testing and adaptability of soils may be found in references (1), (2), and (3).

It is important that the technician verify the quality of the materials as they are being placed during construction. If a questionable change in soil classification occurs, he should consult with his supervisor to determine the suitability of the new material.

Control of Moisture

Water is added to dry soils to improve the lubrication and the workability of the individual particles to form a dense mass when compacted. The maximum dry density (weight in pounds per cubic foot) of the embankment is related to the moisture content and the compactive effort. The technician should be familiar with the moisture density relationship as it applies to moisture control and the compaction of soils. Detailed discussion on this relationship and the methods for making field tests for moisture and density may be found in the National Engineering Handbook, Section 19, Chapters 3 and 4, (1) and in the "Earth Manual," Department of the Interior, Bureau of Reclamation (2).

Fill materials used to construct embankments to meet specified densities should contain uniform moisture in the proper amount. When the fill material is deficient in moisture, better moisture distribution can be obtained by prewetting the borrow area. Adding water to the borrow material after placing on the fill requires careful mixing to distribute the moisture. The use of blades, disks, plows, or other equipment is required for this purpose. Failure to perform the mixing operation carefully results in dry layers and nonuniform densities.

All fill material used to construct embankments that control or store water, whether tested or not, should contain sufficient moisture to permit satisfactory compaction.

Soils that are too wet when excavated from the borrow should be dried to the required moisture content or wasted. Moisture control is a difficult but important phase of embankment construction.

Loading and Placing

Earth embankments usually are constructed from the most suitable materials available at the site; therefore, it is important to select sites where good construction materials are present. Small embankments are often designed as homogeneous fills. Large structures or sites that have limited quantities of impermeable soils may be designed as zoned fills, with the more impermeable material placed as a cutoff and the permeable material placed at less strategic points such as the downstream section of the embankment. The technician in such cases needs to be familiar with the quantity and quality of the borrow materials in order to select and place them in the embankment to produce the zones or transitions specified in the design.

It is common for borrow areas to contain layers or lenses of materials that vary in texture. Often it is possible to use the poor material. The contractor, by selecting the materials at the time of loading and by proper routing and control of the haul equipment, can place the materials in embankment zones where they are suitable for use.

Fill material should not be placed until the foundation preparation has been approved. All water should be removed from the foundation prior to placing the embankment. All embankment material should be placed in uniform horizontal layers not to exceed the specified thickness. For zoned fills, care is required to prevent intermixing of the materials. Fill material should not contain frozen materials or be placed on frozen surfaces.

Compaction

The requirements for compaction and the amount of control depend on the purpose, size, and hazard conditions of the structure involved. The drawings and specifications for the work will state the degree of compaction or the equipment methods required. To accomplish acceptable compaction, the fill material should contain moisture within the specified range, and be spread in uniform loose layers. Each layer is compacted before another layer is added. When the fill is to be compacted to a specified density, the contractor is to select the compacting equipment, and the sequence of operations necessary to obtain the required density.

Tamping rollers (sheepsfoot type) have proven to be very satisfactory for compacting fine-grained plastic soils. Zones containing a large percentage of sand, gravel, or large rock may be consolidated with vibratory smooth drum, pneumatic or grid-type rollers. Portions of the embankment that are not accessible to heavy rollers need to be hand tamped or compacted with small manually directed tampers to the same density as other similar zones of the embankment. For smaller embankments, compaction may be obtained by routing of the construction equipment.

Density

Embankments placed at a specified density require that actual in-place tests be made of the embankment to be sure that the dry density of the embankment meets the requirements. For certain soil or structural conditions it may also be required that the moisture content of the fill material be maintained within specified limits of optimum. For these conditions, detailed inspection is required. The technician should have knowledge of the test equipment and procedures that are applicable to the work. Testing procedures, equipment and test report forms are discussed or referenced in National Engineering Handbook, Section 19, Chapter 4 under "Soils." The sand cone calibrated cylinder or rubber balloon methods for determining volumes are commonly used for fine grained soils. A compaction curve (moisture density) representative of the borrow being placed should be available for comparison with results determined for the embankment. A new curve may be required if the gradation of the borrow changes. Individual tests should be made when it is questionable whether fill densities are meeting requirements. Location of each test made on the fill and complete test data should be recorded on referenced standard forms.

Embankments which, based on experience, do not require density tests and are compacted by specified equipment procedures, may be accepted as meeting the density requirements. The specifications for equipment, the number of passes, and the coverage of each layer of the embankment by the compaction equipment should be checked as the work progresses.

Structure Backfill

The importance of the quality of the materials and the proper placing of structure backfill is often overlooked. Failure of the backfill can endanger the structure. Backfill placed to prevent movement of water should be carefully selected and compacted. The backfill should be fine grained, reasonably plastic, and free from rock over 2 inches in size. The moisture content should be maintained in a range similar to embankment fill. The backfill should be placed in layers less than 4 inches in thickness and distributed uniformly around the structure. Each layer requires compaction by hand tampers or small power equipment. Where a fill is to be placed against walls, they should be checked as compaction progresses to make sure that overstressing and damage to the structures do not occur.

Finish and Cleanup

A little extra effort in smoothing earthwork, finishing exposed surfaces of concrete, and cleanup of the job site creates pride in the completed structure by all parties concerned. A job may be constructed according to the requirements but if the finish and final cleanup of the structure and worksite is not completed in a workmanlike manner, it reflects on the adequacy of the entire job.

4. CONCRETE

CHARACTERISTICS AND PERFORMANCE

Structures made of good quality concrete have the properties of strength, rigidity and watertightness, and resistance to wear, weather and other destructive agents.

Concrete is high in compressive strength, or its ability to resist crushing. It is relatively weak in tensile strength, or its ability to resist bending. Tensile stresses in concrete structures are caused by earth or water pressures, structure dead loads, and expansion and contraction due to temperature changes.

In properly made concrete each particle of the fine and coarse aggregate is completely surrounded, and all spaces between aggregate particles are completely filled by the water-cement paste. This paste is the cementing medium which binds the aggregates into a solid mass. The cementing action is due to chemical reactions between the cement and water. The setting or hardening action is quite rapid for the first two weeks under favorable temperature and moisture conditions. Additional strength is attained at a decreasing rate for a period of months.

Fine and coarse aggregates make up 65 to 75 percent of the volume of the concrete mix; therefore, care in their selection is important. They should be graded to obtain the best economy from the paste, and consist of particles having ample strength and resistance to exposure conditions.

The detail and thoroughness exerted in the design and testing of the mix should be in line with the size and requirements of the structure.

MATERIALS

Cement

Portland cement for small jobs usually is delivered in paper sacks containing 94 pounds which is equal to 1 cubic foot in volume. All cement at the time of use should be free from lumps that cannot be pulverized between the thumb and fingers. Portland cement should be stored in a dry place.

Portland cement is manufactured in 5 types to meet construction requirements, as follows:

Type I - Normal Portland Cement - Suitable for all uses when the special properties of the other types are not required.

Type II - Modified Portland Cement - Has improved resistance to sulphate attack, and should be used where sulphate concentrations are higher than normal but are not unusually severe.

Type III - High Early Strength Portland Cement - For use where high strengths are required at an early date, or in cold weather to reduce heating period.

Type IV - Low Heat Portland Cement - For use where amount and rate of heat generation must be kept to a minimum such as massive concrete structures. Not generally suited to Service concrete construction.

Type V - High Sulphate-Resistant Portland Cement - Used in concrete exposed to severe sulphate action.

The suffix "A" when added to Types I, II and III designates that an air entraining agent has been added to the portland cement.

Water

Mixing water should be clean and free from oil, alkali or acid. In general, water that is fit to drink is suitable for use; however, water that contains excessive quantities of sulphates should be avoided, even though it may be fit to drink.

Aggregates

Fine and coarse aggregates should be hard, free from dirt, and organic materials. Aggregates containing silt and clay particles in excess of 2 percent by weight should not be used.

Fine aggregates consist of natural or manufactured sand. Concrete sand should contain particles ranging in size from 1/4 inch to material retained on a 200-mesh screen. Good gradation from coarse to fine is important for quality and workability of the concrete.

Coarse aggregate may consist of gravel, crushed stone, or other suitable materials larger than 1/4 inch. Aggregates that are sound, hard, and durable are best suited for making concrete. Materials that are chemically reactive, soft or flaky, or wear rapidly are unsatisfactory. The material should be well graded from maximum nominal size to 1/4 inch.

The maximum size of coarse aggregate depends on the thickness of wall or slab, and the amount of steel reinforcement. In general, for walls or slabs over 6 inches thick containing a single row of steel, aggregate graded up to 1-1/2 inches may be used. For a wall thickness of less than 6 inches, aggregate graded up to 1 inch is recommended since it is easier to place. These are standard separation sizes and are usually available at commercial aggregate plants.

It is good economy to use washed and screened aggregates that are known to produce good concrete. Bank-run (pit) sand-gravel, even though hard and of acceptable gradation, may not be suitable. Pit aggregates

often contain excessive amounts of soil and organic material. Prior to the use of these materials a quick silt test should be made. Proceed as follows:

1. Fill a fruit jar to a depth of 2 inches with a representative sample of the aggregate.

2. Add water until jar is about 3/4 full.

3. Shake vigorously for 2 minutes; complete by agitating to level the material.

4. Let the mixture stand for 1 hour, then measure depth of silt layer on top of sand.

If the layer is more than 1/8 inch in thickness, the aggregate is unsuitable for making concrete.

Air Entrainment

Air entraining admixtures may be contained in the cement (designated by suffix "A") or they may be added to the batch at the time of mixing. These materials, which include various compounds such as natural wood resins, fats, sulfonated compounds and oils, create a vast number of minute air bubbles in the concrete. Adding air by this method improves the workability and placing of the concrete, and also increases the resistance to severe frost and chemical action. The air content of the mix should be maintained between 3 and 7 percent. Control of the air content of the mix is more difficult when air-entrained cement is used, due to the fixed amount added to the cement. Control is more satisfactory when the admixture, usually a liquid, is added to the water at the time of mixing. The amount recommended by the manufacturer will usually produce the required air content. Because of its proven service record and improvement in workability, air entrained concrete is recommended for all work.

PROPORTIONING THE MIX

All concrete needs to consist of a workable mix that can be placed and finished in an acceptable manner. Such mixes should contain sufficient cement paste to bind the aggregates together and enough cement and sand to give smooth surfaces free from honeycomb.

For small amounts of concrete the following suggested mix will produce good concrete and is simple to batch on the job: one sack cement (1 cubic foot), 2 cubic feet sand, 3-1/2 cubic feet of gravel or crushed rock and a maximum of 6 gallons of water. The proportions of sand and coarse aggregate may require slight variation if the mix does not meet slump or placing requirements.

For jobs that require large amounts of concrete, a more refined mix can be justified. Service engineers should work with the work unit staff and the concrete supplier and select a mix that is economical and satisfies the job requirements.

The Portland Cement Association publication, Design and Control of Concrete Mixtures (4), presents excellent coverage on the details of design, placing and finishing of concrete. The publication is recommended for study by field technicians.

Water-Cement Ratio

The principal requirements for concrete are strength, durability, workability and economy. A well-proportioned mix should result in good balance among these four essentials. The first step in designing the mix is to select the water-cement ratio (gallons-per-bag cement) which will produce concrete of the desired strength and durability. The next step is finding a suitable combination of aggregates which will give good workability when mixed with the selected water-cement content. If the ratio of water to cement is maintained constant, the potential compressive strength of the concrete is practically constant, providing the mix is plastic and workable. It is more economical to design the mix to use the maximum amount of coarse aggregate within the limits of acceptable workability.

Allowing for Moisture in the Aggregates

The selection of the water-cement ratio assumes the maximum gross amount of available water. Most aggregates contain some free water that is available in the mix. The amount in the coarse aggregate is generally small and can be disregarded. Sand can contain a surprising amount of water which should be evaluated.

For small jobs a field test may be made by squeezing a sample of the wet sand in the hand.

Dry sand - Air dry is seldom available for use. No correction needed.

Damp sand - Feels slightly damp to the touch but leaves little moisture on the hands, and represents about 1/4 gallon of water per cubic foot or about 2 percent by weight.

Wet sand - Feels wet and leaves a little moisture on the hands after handling. This indicates approximately 1/2 gallon of water per cubic foot or about 4 percent moisture by weight.

Very wet sand - Is dripping wet when delivered to the job and leaves appreciable amounts of water on the hands. Such aggregate carries 3/4 to 1-1/4 gallons of water per cubic foot, or 6 to 9 percent by weight.

It is important to control the amount of mixing water added at the mixer, taking into consideration the amount of moisture in the fine

aggregate. The following example represents the corrections required for variations in moisture content:

1 gallon water = 8.33 pounds 1 bag cement = 94 pounds

Water-cement ratio = 6 gallons per bag cement

$$= \frac{6(8.33)}{94} = \frac{50}{94} = .53$$

1/2 bag batch

Cement per batch (pounds)	Quantity of water to add when sand is: Dry	Damp	Wet	Very Wet
	(gallons)			
47	3	2-1/2	2	1-1/2

Size and Gradation of Aggregates

Sharp, rough or flat and elongated aggregate particles of coarse aggregate, such as crushed rock, require more fine aggregate and cement to produce good workable concrete than natural sands and gravels which usually are made up of rounded particles. The gradation of, or particle-size distribution in, the fine and coarse aggregate is important because of its effect on the workability, porosity, shrinkage and economy of the mix. Very fine sands require extra cement. Coarse sands give a harsh, unworkable mix. The larger the size of the coarse aggregate the less cement and water required for a given quality. Variations in grading of the coarse aggregate should be compensated for by varying the amount of sand. Uniformly graded aggregates are easier to proportion and should be used when available.

Consistency

Consistency is related to the workability of the mix and is measured by the use of the slump cone. The methods for sampling fresh concrete and for making the slump test are outlined in National Engineering Handbook, Section 19, Chapter 4, Tests C-1 and C-2. The consistency is commonly referred to as the slump of the mix.

Concrete having good consistency is smooth and workable and will place and finish with minimum effort. When worked with a trowel it has a sticky feel. The coarse aggregates do not separate when the concrete is placed in the forms, and excessive free water does not appear on the surface after it is consolidated. A slump of 3 to 4 inches, as measured by the slump cone, is satisfactory for most slab and form construction.

CONTROL OF JOB MIX

Small quantities of concrete mixed on the job are often batched by volume. The volume of a container to be used for measurement can be determined by filling the container with water and weighing it. A cubic foot of water weighs 62.4 pounds. The calibrated containers may then be used to measure the required amount of water, cement, and fine and coarse aggregates for batching. If wheelbarrows are used to convey aggregates from the stockpile to the mixer, a mark may be established in the wheelbarrow bed to represent the required measured volume of the aggregates. It is important that the aggregates in the stockpile are uniform in gradation and accurately measured. Small variations in quantities of the ingredients have an appreciable effect on the quality and slump of the concrete.

More refinement and accuracy may be accomplished by batching by weight. This refinement is justified for larger jobs. Commercial transit mix concrete frequently is used for projects requiring 5 cubic yards or more. Such plants batch by weight and will deliver the mix specified for the work. Procedures for determining or checking the batch weights for the mix are outlined in the publication, Design and Control of Concrete Mixtures, Portland Cement Association.

MIXING

Concrete should be mixed until it is uniform in appearance with all ingredients uniformly distributed. Mixers should not be loaded in excess of their rated capacity and should be operated at the speeds for which they were designed. Concrete may be satisfactorily mixed on the job in any type of revolving drum mixer, provided the mixing blades are clean and not badly worn, and the capacity and speed of the drum are properly maintained. The minimum mixing time after all ingredients are in the drum should be 1-1/2 minutes. A longer period may be used if the mix is not uniform at the end of this time. A part of the mixing water should precede the placing of dry materials into the mixer, and more is added during the charging operation. The final amount of the mixing water should then be added after all the other ingredients are in the mixer. No material should be permitted to escape from the drum during the mixing operation.

Concrete delivered in transit mixers should be mixed about 75 revolutions at mixing speed and then maintained at agitation speed until delivered at the job.

PLACING

Before any concrete is placed, the excavations, forms, steel reinforcement, embedded fixtures, and joints should be inspected to determine that their requirements have been met. Earth surfaces should be firm, moist, and free of frost and ice. Rock surfaces should be reasonably smooth, moist, and free of loose material. Form surfaces should be oiled or moistened just prior to placing concrete. All sawdust, scrap lumber and other debris should be removed from the areas to receive concrete.

The concrete should be placed in the forms as soon as possible, normally not longer than 1-1/2 hours after mixing.

Concrete may be transported by many methods, such as wheelbarrows, push buggies, chutes, or crane buckets. For small onsite mixing, the wheelbarrow is a common means of transportation. Often direct delivery can be made from the transit mix trucks to the forms. Whatever method is used, care is required to prevent separation of the coarse and fine particles commonly known as segregation.

To avoid segregation of materials, concrete should not be allowed to drop freely more than 5 feet. Drop chutes made of metal or rubber should be used in wall sections when the free fall exceeds 5 feet. The drop chutes can be made rectangular to fit between the reinforcing steel. The concrete should be placed as nearly as practicable in its final location. Concrete placed in large quantities and allowed to run, or to be moved over a long distance, results in segregation.

Slabs are usually placed to full thickness in one continuous operation. Formed concrete should be placed in layers not to exceed about 18 inches. Special precaution is required to schedule placing successive layers before the concrete has started to set. "Cold" joints are unsightly and may permit leakage and deterioration of the concrete.

Consolidation

The fresh concrete should be consolidated as soon as it is deposited in the work. Internal vibrators and tamping and spading may be used. Vibrators should be inserted vertically and allowed to penetrate into the previously placed plastic layer. The vibrator head should be moved slowly up and down on about an 18-inch spacing. Allowing the vibrator to remain stationary for more than a few seconds may cause the concrete to segregate. Only sufficient vibration is required to consolidate each layer with the previously placed layer and to completely fill the corners and embed the reinforcement and other items. The finish next to the forms may be improved by spading with spudding hoes or wood strips, which tends to release trapped air and force the coarse aggregate away from the form surface.

Construction of Joints

The construction joint is the most common type of joint required in small concrete structures. It is not constructed as a plane of weakness but is a procedure used when the concrete cannot be placed in a single operation. Joints should be made straight and horizontal or vertical. The surface of the joint should be formed with a recess or keyway when so specified on the drawings. Some improvement in the bond may be derived from this type of joint provided it is properly formed and cleaned.

Extra care is needed to insure bonding of the newly placed concrete to that previously placed. The surfaces of existing concrete should be thoroughly cleaned to remove loose surface material and expose solid

aggregates. Sandblasting or steel wire brushes are commonly used for this operation. The exposed surfaces should be washed or air blasted to remove all loose material and should be damp at the time fresh concrete is placed.

Contraction and Expansion Joints

All concrete contains water in excess of that required for hydration of the cement. The evaporation of the excess water creates tensile stress in the concrete due to shrinkage. Concrete movement is also caused by changes in temperature. During cold weather the material will contract or shrink. If these stresses are not relieved by providing contraction joints, unsightly random cracks are likely to develop.

Contraction joints should be located as shown on the drawings. The spacing, normally set by a professional engineer, may vary from 10 to 25 feet depending on the kind of structure and the exposure conditions. The joints are installed by cutting with a special saw or by forming grooves that extend about 1/4 to 1/5 of total thickness into the slab or wall. The joints often referred to as "dummy joints," should be uniform in depth and alignment. Cracks as they occur are expected to form naturally at the weakened section.

Expansion joints are installed to relieve severe thrust which is often caused by high temperature. Premolded bituminous strip materials or compositions of cork or rubber having a width equal to the slab or wall thickness, and varying from 1/4- to 1/2-inch in thickness, are commonly used for these joints. The joint material may be placed at junctions between new concrete and a restraining body such as buildings, curbs, or other kinds of structures. The joint also may be specified for long continuous structures such as ditch linings, and the spacing determined by a professional engineer may vary from 40 to 100 feet. The expansion joint material should be supported and anchored in a uniform plane true to line, and remain in this position while concrete is placed. After completion of the concrete work, the exposed edges of the expansion material should be flush with the concrete surfaces and free from mortar or other concrete material.

FINISHING CONCRETE

The kind of finish specified for concrete work depends on the use of the completed job. The wood float finish is generally adequate. Under certain conditions mentioned below, a trowel or broom finish may be required.

After the concrete has been placed and consolidated, the surface is struck off flush with the forms or finish strips. A 2 x 4 or 2 x 6 on edge is often used on small jobs. The striking off, or screeding, is a leveling operation that removes humps and carries excess concrete ahead of the screed to fill the hollows and give a true surface. In the screeding process some tamping action may be necessary to embed large aggregate and to bring a very small amount of mortar to the surface. Light floating, as required to give a uniform surface, follows the screeding.

The final finish is delayed until the free water has disappeared and the concrete surface takes on a dull appearance.

When excess water is present on the surface, the final finishing should be delayed until evaporation has taken place. Dry cement should not be applied to take up moisture or water added to the surface to aid in finishing. Such practices alter the mix and may cause cracking, dusting, spalling, or other surface deterioration.

The wood float results in a relatively smooth surface with a sandy texture. When a dense smooth surface is desired, the steel trowel or float should be used after the surface becomes quite firm. Concrete should not be troweled when soft and plastic, and the troweling operation should be limited to the minimum required for a smooth surface. Better traction and a pleasing appearance may be added to a trowel surface by lightly brushing with a broom.

Magnesium metal floats and trowels have been found to give a superior finish when air-entrained concrete is used.

FORM REMOVAL

Forms should not be removed from a structure until the concrete has hardened adequately to prevent surface damage, and sufficient strength exists to safely support any loads that may be applied. When the average daily temperatures are above 50° F., forming for sidewalls and tops of sloping surfaces can usually be safely removed 24 hours after the concrete is placed. When the concrete temperatures approach 32° F., additional time should be allowed for the concrete to harden.

Forming that provides vertical support, such as inside of barrels, slabs or arches, should remain in place until the concrete has developed adequate strength to support the weight of the concrete and any live loads that may occur. The minimum lapse time before removing this type of forming should be as specified on the drawings, or the strength of the concrete as determined from test cylinders.

Precaution should be taken to remove all forms with the minimum amount of stress or shock to the structure. Pry bars or other metal tools should not be placed against the concrete to loosen the forms. Wooden wedges driven between the form and the concrete and tapping of the forms should be sufficient effort to remove forming that has been properly constructed, cleaned, and coated with form oil.

REPAIR OF CONCRETE

Minor surface defects such as snap tie cone depressions, small honeycomb areas, or broken corners or edges are generally repaired with a dry-pack mortar. The repair will develop the best bond if applied immediately after stripping the forms and while the concrete is green.

All loose questionable concrete should be removed and the area to be repaired should be washed clean. The total area in contact with the mortar should be kept moist for at least 1 hour prior to making the repair.

Dry-pack mortar consists of a mix of 1 part cement and 2-1/2 parts of sand that will pass a No. 16 screen. Only enough water should be added to produce a filling which is at the point of becoming rubbery when the material is solidly packed. Excess water in the mix will cause shrinkage and a loose repair.

The repair should be placed in layers less than 1/2 inch in thickness. Additional layers may be placed without delay unless the patch material becomes rubbery. For small depressions such as snap tie holes, each layer should be compacted by using a hardwood tamping stick and working at a slight angle toward the sides of the area to be filled. The surface of the repair should be made just flush with the adjacent concrete.

The repaired areas should be cured in the same manner as originally required for the structure. If curing compound is not applied upon completion of the work, the repaired surfaces should be kept wet for at least 24 hours to prevent shrinkage.

CURING CONCRETE

Proper curing increases strength, durability, and watertightness of concrete.

Adequate curing methods accomplish two important functions:

1. Retain sufficient moisture within the concrete to permit complete hydration of the cement.

2. Stabilize temperatures at the level required to complete the chemical reaction.

The ideal curing temperature for concrete is about 70° F. All new concrete should be maintained above 40° F. for at least 3 days. Concrete treated with proper curing methods and maintained at satisfactory temperatures will attain approximately 70 percent of the 28-day design strength in 7 days.

Recommended curing methods include:

1. Water - spraying, fogging, or ponding.

2. Covering - with wet burlap, canvas, sand, or other material.

3. Membrane compounds - sprayed or painted on concrete surfaces to prevent evaporation of water from the mix.

Curing with water requires that the exposed surfaces are kept wet for the duration of the curing period, usually a minimum of 7 days. Water should be applied immediately after finishing and when the concrete has taken initial set. Flowing water should not come in contact with newly placed concrete. Forms should be removed as soon as possible so that curing procedures can be performed. When form removal is delayed, water should be added to the exposed concrete surface and allowed to penetrate along the formed surface, or by covering the forms with burlap or canvas and wetting the material for the required curing period.

Membrane compounds have become widely used curing aids because of their ease of application. The compounds are available in clear, black, white, or gray. White or gray pigmented compounds are preferred because of the ease of determining coverage of the surface and the reflection of heat rays which reduce concrete temperatures in hot weather. It is very important to have complete uniform coverage of all the concrete surfaces. The compound should be well mixed and applied with a spray at a rate of 1 gallon per 150 square feet of surface. If the coating is damaged by heavy rain or by other cause during the curing period, the surfaces should be recoated. The compound should be applied to exposed surfaces immediately after the concrete is finished and the free water has evaporated. If there is any delay, the surface should be kept moist with water until the compound is applied. After the forms are removed the surfaces should be kept wet until necessary surface repairs are made, and then the curing compound should be applied. Curing membranes prevent satisfactory bond of the concrete; therefore, it is very important to determine that the curing compound is not applied to surfaces requiring bond, such as construction joints, surfaces requiring repair, reinforcing steel, or other embedded items.

REQUIREMENTS FOR HOT WEATHER

Hot weather increases the rate of evaporation of the mixing water and the temperature of the mix. Too rapid setting or drying out of the concrete, which often occurs during high temperatures, can result in a badly cracked surface, flaking, and shrinkage. These generally cause a weakened, inferior concrete.

Hot weather precautions become necessary when temperatures are above 85° F. The following basic steps should be taken to obtain good quality concrete in hot weather:

1. Reduce the temperature of the mix by prewetting the aggregates, adding ice to the mixing water, or by making evening or early morning pours when temperatures are more favorable.

2. Saturate the subgrade sometime in advance and sprinkle subgrade and forms just ahead of placing concrete.

3. Prevent overmixing and delays in placing concrete.

4. Have adequate help so that finishing can be accomplished rapidly.

5. Start curing as soon as possible.

If temperatures are extreme it is desirable to water cure the finished surface for at least 12 hour prior to coating with membrane compound.

REQUIREMENTS FOR COLD WEATHER

Concreting in cold weather requires precaution in mixing, placing, and curing. Concrete gains strength slowly at temperatures below 50° F., and can be seriously damaged by freezing and thawing at an early age. Concrete must be protected in cold weather to provide a suitable curing temperature. Plans and equipment for protecting the concrete should be scheduled in advance, and the equipment should be on the job prior to placing concrete.

Concrete should not be placed when the minimum daily temperature is less than 40° F., unless facilities are provided to prevent freezing. Concrete at the time of placing should be in the temperature range of 50° F. to 90° F. Heating the mixing water is a common method of increasing the temperature of the mix. The mixing water should not come in direct contact with the cement when the water temperature exceeds 100° F. Excessive heat in the mixing water or aggregates can cause flash set when they make contact with the cement.

Concrete should not be placed on frozen subgrade. All ice and snow should be removed from inside the forms and from around the reinforcing steel.

Cold weather curing requires suitable temperatures and moisture conditions for the concrete to promote strength and to prevent freezing. The concrete may be protected by covering, insulating, or housing. The amount and kind of protection will depend on the weather conditions and the type of structure. Concrete generates heat for the first few days, and when temperatures are not severe, covering with hay, straw or insulating blankets when kept in close contact with the concrete may provide adequate protection.

For large structures or when temperatures are quite severe there is need for housing and a source of dependable heat. The concrete surfaces should be maintained at not less than 50° F. for the specified curing period. When dry heat is provided, it is necessary to add moisture to the air within the enclosure, or apply wet cure to the concrete.

Accelerators or antifreeze compounds such as calcium chloride should not be used.

It is desirable to maintain complete records of weather conditions and temperatures when placing concrete in cold weather. It is also desirable to have daily maximum and minimum temperatures of representative surfaces of the concrete structure for the duration of the curing period.

FORM CONSTRUCTION

Materials

Wood and metal are suitable for concrete forms. Concrete-form-grade plywood sheathing and 2 x 4 studs and wales make the best combination. When plywood sheathing is not available, shiplap or tongue-and-groove lumber may be used. Such form lumber should be finished on all 4 sides and free of knotholes and decay. Double forms for walls or other sections require adequate ties and spacers. Form snap ties which are available from commercial supply are commonly used, due to the ease of assembly and saving in labor. These patented steel rods act as spacers to give the desired concrete section, and also provide a dependable tie to hold the forms in position and resist the concrete loads. After the forms are removed, the excess length of the tie rod should be removed by twisting, which results in a break at a predetermined point slightly within the concrete wall surface. The small recess in the concrete caused by the rod and cone is filled with mortar. Threaded bolts and screw assemblies are also available for extra heavy load requirements.

Fabrication Requirements

All forms must be strong enough to contain and support the concrete while it is plastic, and to carry the live loads incidental to the construction operation. They also must be tight to prevent the escape of the water-cement paste from small openings, which could result in honeycomb or sand streaking. The forms also have to be constructed to correct dimension and securely braced and anchored to form the shapes and surfaces specified in the drawings.

Forms should be inspected prior to placing concrete to verify the dimensions, grades, and adequate strength. Freshly mixed concrete exerts great pressure and presents a serious problem if forms bulge or fail during the pouring operation.

Form Design

Detailed design of concrete forms requires the analysis of the loads and pressures exerted by the concrete and the selection of materials that may be used to withstand the loads (see Table 17-1).

Table 17-1 Concrete pressure per square foot of form *

	Rate of pour (feet of height per hour)						
	2	3	4	5	6	8	10
Maximum pressure in pounds per square foot at:							
50° temperature	520	690	860	1,030	1,210	1,470	1,580
70° temperature	400	520	630	750	860	1,090	1,170

* This table is based on the use of mechanical vibration inside the forms.

The selection of form material and the proper spacing for studs, wales and form ties have been presented in curves and charts by numerous form and form accessory manufacturers. Table 17-2, duplicated through the courtesy of Superior Concrete Accessories, Inc., is typical and provides a quick reference that may be used in checking the adequacy of concrete forming.

The use of Table 17-2 is illustrated by the following problem.

Determine the required spacing of the studs, wales, ties, and the unit load per tie where the following conditions are known:

1. Sheathing - 3/4-inch plywood; studs 2 x 4; wales double 2 x 4.

2. Rate of pour - 4 feet of wall per hour.

3. Setting temperature of the concrete - 70° F.

Table 17-2 is based on a setting temperature of 70° F. (meeting condition 3). In the table, columns are given for rates of pour varying from 2 to 10 feet per hour. Column 3 shows the correct spacing of studs, wales and ties for a rate of 4 feet per hour (meeting condition 2). Thus, by reading down this column and under the heading of "lumber sizes" and "spacing of studs" and opposite "3/4-inch sheathing" we find the required spacing for the studs to be 18 inches; continuing under the heading "wale spacing" and 2 x 4 studs, the spacing of the wales is 28 inches, and under "tie spacing" opposite double 2 x 4 wales, the spacing of the ties is 24 inches.

The total load per tie is obtained by multiplying the maximum pressure per square foot, 630 pounds (shown top of column for 4-foot rate) by the area supported by the tie rod. Thus, 630 pounds x 2.33 feet (spacing of wales) x 2.0 feet (spacing of ties) = 2,935.

The total computed load per tie for the suggested forming is within the safe working limits of a 3/8-inch form tie which has a safe load of 3,000 pounds and an ultimate capacity of 4,500 pounds.

Method of Assembly

The method of assembly commonly used for forming small structures is shown in Figure 17-1. The forms should be constructed so that they can be easily filled and removed. All forms should be adequately nailed and braced. Double-headed form nails are commonly used for exterior nailing since they expedite the removal of the forms and also increase the salvage of the form materials.

Treatment of Surfaces

Form surfaces that will be in contact with the concrete should be painted with some type of oil or sealant that will prevent the concrete from sticking to the forms. Surface treatment also aids in preventing the forms from warping. Materials specially prepared for coating forms may be purchased; however, for small jobs engine lubricating oil or used oil may be substituted. Lubricating oil may be thinned with kerosene as required for easy brushing. Excess surface coatings should be removed from the forms. Any coating material must be removed from the reinforcing steel or surfaces of concrete to be in contact with the new pour. Forms should be cleaned and oiled each time they are used.

Table 17-2 Spacing data for form lumber and form ties

These tables are based on the use of mechanical vibration inside the forms

LUMBER AND FORM TIE DATA				SAFE SPACING OF STUDS, WALES, AND FORM TIES														
LUMBER SIZES	FORM TIES			POURING TEMPERATURES	50° FAHRENHEIT							70° FAHRENHEIT						
				RATE OF POUR — FT. OF HEIGHT PER HOUR	2 FL	3 FL	4 FL	5 FL	6 FL	8 FL	10 FL	2 FL	3 FL	4 FL	5 FL	6 FL	8 FL	10 FL
	TYPE	SAFE LOAD	ULTIMATE CAPACITY	CONCRETE PRESSURE PER SQ. FT. OF FORMS	520 lbs	690 lbs	860 lbs	1030 lbs	1200 lbs	1470 lbs	1580 lbs	400 lbs	520 lbs	630 lbs	750 lbs	860 lbs	1090 lbs	1170 lbs
1" (¾") SHEATHING or ¾" PLYWOOD	300 Snap Ties			Stud Spacing for Safe Value of Sheathing	20"	18"	16"	15"	14"	13"	12"	23"	20"	18"	17"	16"	14"	14"
2 x 4 STUDS	A. C. Ties	3,000 lbs	4,500 lbs	Wale Spacing for Safe Value of Studs	30"	27"	26"	24"	23"	22"	22"	31"	30"	28"	27"	26"	24"	23"
2 - 2 x 4 WALES	No. 2 Rod Clamps with ½" Plain Rods			Tie Spacing for Safe Value of Ties and/or Wales	21"	23"	19"	17"	15"	13"	12"	32"	27"	24"	21"	19"	16"	16"
1" (¾") SHEATHING or ¾" PLYWOOD	500* Snap Ties			Stud Spacing for Safe Value of Sheathing	20"	18"	16"	15"	14"	13"	12"	23"	20"	18"	17"	16"	14"	14"
2 x 4 STUDS	Superties*			Wale Spacing for Safe Value of Studs	30"	27"	26"	24"	23"	22"	22"	31"	30"	28"	27"	26"	24"	23"
2 2 x 4 WALES	Tall Locks with ⅜" cold rolled rods	5,000 lbs	7,500 lbs	Tie Spacing for Safe Value of Ties and/or Wales	30"	28"	26"	*25"	23"	22"	20"	32"	30"	29"	27"	26"	25"	24"
	No. 3 Rod Clamps with ½" Plain Rods																	
1" (¾") SHEATHING or ¾" PLYWOOD	500* Snap Ties			Stud Spacing for Safe Value of Sheathing	20"	18"	16"	15"	14"	13"	12"	23"	20"	18"	17"	16"	14"	14"
2 x 4 STUDS	Tall Locks with ⅜" cold rolled rods	5,000 lbs	7,500 lbs	Wale Spacing for Safe Value of Studs	30"	27"	26"	24"	23"	22"	22"	31"	30"	28"	27"	26"	24"	23"
2 - 2 x 6 WALES	No. 3 Rod Clamps with ½" Plain Rods			Tie Spacing for Safe Value of Ties and/or Wales	46"	38"	32"	29"	25"	22"	20"	56"	46"	40"	35"	32"	27"	26"
1" (¾") SHEATHING or ¾" PLYWOOD				Stud Spacing for Safe Value of Sheathing	20"	18"	16"	15"	14"	13"	12"	23"	20"	18"	17"	16"	14"	14"
2 x 4 STUDS	½" Coil Ties	6,000 lbs	9,000 lbs	Wale Spacing for Safe Value of Studs	30"	27"	26"	24"	23"	22"	22"	31"	30"	28"	27"	26"	24"	23"
2 - 2 x 6 WALES				Tie Spacing for Safe Value of Ties and/or Wales	51"	46"	38"	34"	31"	26"	25"	58"	50"	48"	43"	38"	33"	32"
1" (¾") SHEATHING or ¾" PLYWOOD				Stud Spacing for Safe Value of Sheathing	20"	18"	16"	15"	14"	13"	12"	23"	20"	18"	17"	16"	14"	14"
2 x 6 STUDS	½" Coil Ties	6,000 lbs	9,000 lbs	Wale Spacing for Safe Value of Studs	46"	42"	40"	38"	36"	34"	34"	49"	46"	44"	42"	40"	38"	36"
2 2 x 6 WALES				Tie Spacing for Safe Value of Ties and/or Wales	36"	30"	25"	22"	19"	17"	16"	44"	36"	31"	27"	25"	21"	20"
1" (¾") SHEATHING or ¾" PLYWOOD	½" and ¾" Coil Ties			Stud Spacing for Safe Value of Sheathing	20"	18"	16"	15"	14"	13"	12"	23"	20"	18"	17"	16"	14"	14"
2 x 6 STUDS	Tall Locks with ½" cold rolled tie rods	9,000 lbs	13,500 lbs	Wale Spacing for Safe Value of Studs	48"	42"	40"	38"	36"	34"	34"	49"	46"	44"	42"	40"	38"	36"
2 - 2 x 6 WALES				Tie Spacing for Safe Value of Ties and/or Wales	42"	38"	35"	33"	30"	28"	24"	47"	42"	39"	36"	35"	31"	30"
1" (¾") SHEATHING or ¾" PLYWOOD	½" and ¾" Coil Ties			Stud Spacing for Safe Value of Sheathing	20"	18"	16"	15"	14"	13"	12"	23"	20"	18"	17"	16"	14"	14"
2 x 6 STUDS	Tall Locks with ½" cold rolled tie rods	9,000 lbs	13,500 lbs	Wale Spacing for Safe Value of Studs	46"	42"	40"	38"	36"	34"	34"	49"	46"	44"	42"	40"	38"	36"
2 3 x 6 WALES				Tie Spacing for Safe Value of Ties and/or Wales	52"	45"	38"	33"	30"	26"	24"	57"	52"	46"	41"	37"	31"	30"
2" (1½") SHEATHING	½" and ¾" Coil Ties			Stud Spacing for Safe Value of Sheathing	40"	37"	34"	32"	30"	28"	27"	44"	40"	38"	35"	34"	31"	31"
3 x 6 STUDS	Tall Locks with ½" cold rolled tie rods	9,000 lbs	13,500 lbs	Wale Spacing for Safe Value of Studs	42"	38"	35"	33"	32"	30"	29"	45"	42"	39"	37"	34"	33"	32"
2 3 x 6 WALES				Tie Spacing for Safe Value of Ties and/or Wales	41"	37"	35"	33"	31"	29"	29"	45"	39"	38"	37"	36"	32"	31"
1" (¾") SHEATHING or ¾" PLYWOOD				Stud Spacing for Safe Value of Sheathing	20"	18"	16"	15"	14"	13"	12"	23"	20"	18"	17"	16"	14"	14"
2 x 6 STUDS	¾" Coil Ties	12,000 lbs	18,000 lbs	Wale Spacing for Safe Value of Studs	46"	42"	40"	38"	36"	34"	34"	49"	46"	44"	42"	40"	38"	36"
2 2 x 6 WALES				Tie Spacing for Safe Value of Ties and/or Wales	42"	38"	35"	33"	31"	29"	28"	47"	42"	39"	37"	35"	31"	31"
2" (1½") SHEATHING				Stud Spacing for Safe Value of Sheathing	40"	37"	34"	32"	30"	28"	27"	44"	40"	38"	35"	34"	31"	31"
3 x 6 STUDS	¾" Coil Ties	12,000 lbs	18,000 lbs	Wale Spacing for Safe Value of Studs	42"	38"	35"	33"	32"	30"	29"	45"	42"	39"	37"	34"	33"	32"
2 3 x 6 WALES				Tie Spacing for Safe Value of Ties and/or Wales	41"	37"	35"	33"	31"	29"	29"	45"	39"	38"	37"	36"	32"	31"

*Ultimate Capacity 7,000 lbs.

Courtesy of Superior Concrete Accessories, Inc.

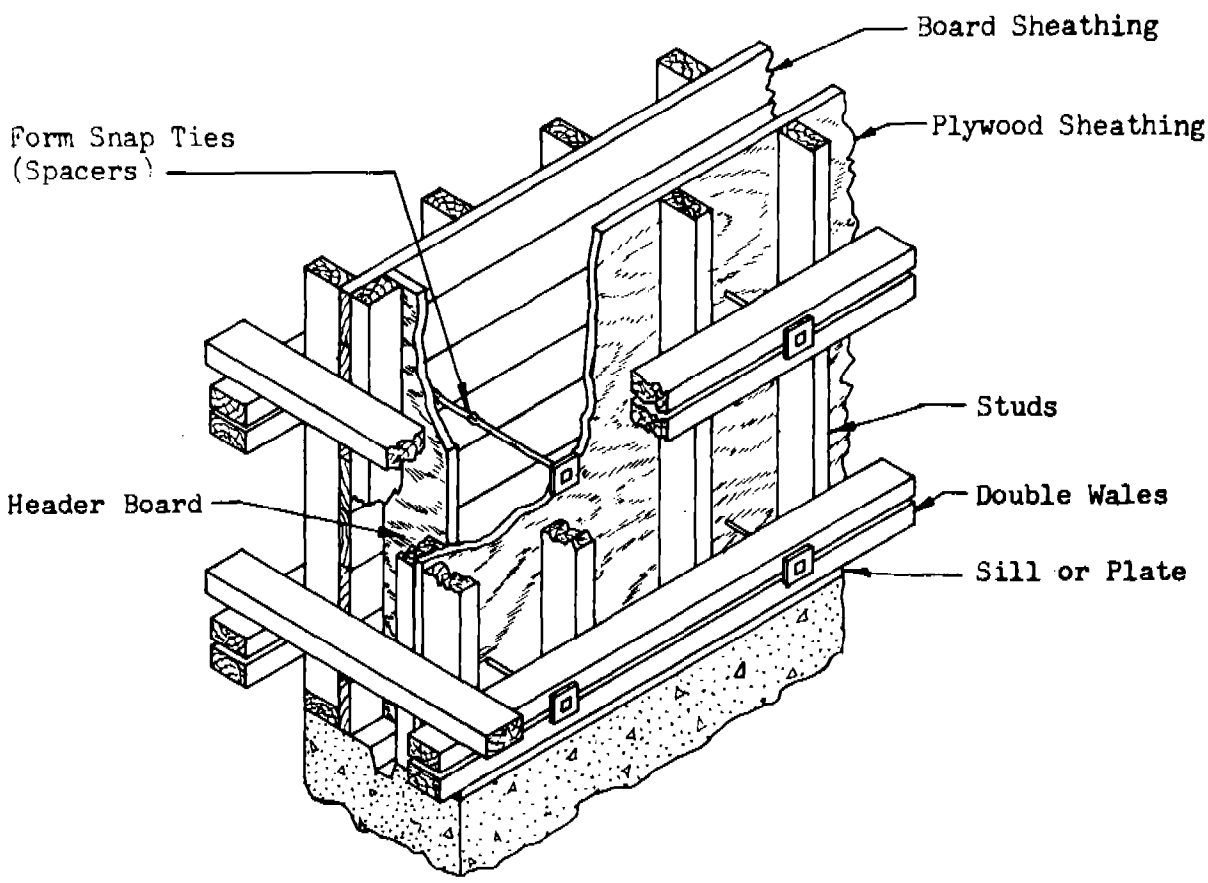

AN EXAMPLE FOR BUILDING FORMS FOR SMALL STRUCTURES

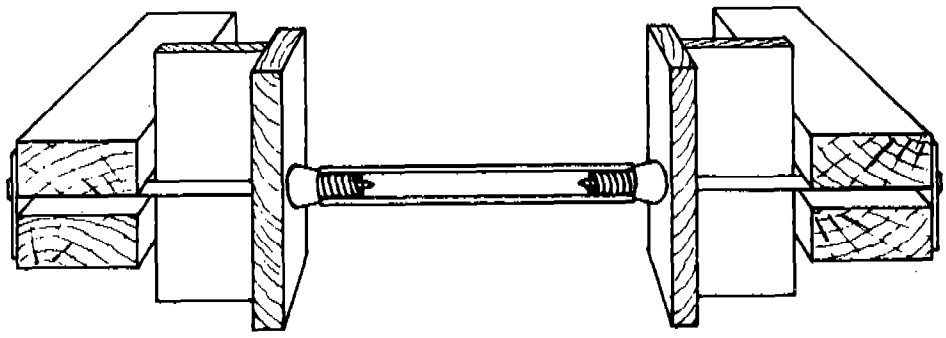

MALE BOLT TYPE FORM AND SPREADER TIE

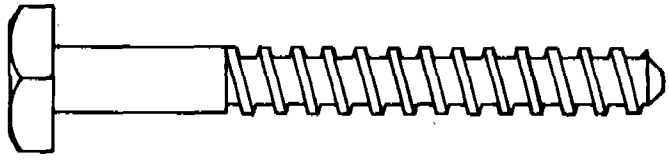

MALE BOLT

Figure 17-1 Typical form assembly

5. STEEL REINFORCEMENT

PURPOSE

Steel reinforcement is embedded in concrete to increase its strength in tension. The tensile forces may result from loading imposed on the structure or from temperature stresses.

MATERIALS

Kinds

The kinds of steel reinforcement commonly used for concrete are deformed bars and welded wire fabric.

Quality

The quality of the steel reinforcement is of major importance for all structures. Only steel products manufactured by standard plant control procedure and meeting the design requirements should be used. The use of scrap iron, cable, woven wire or other waste metal is unsatisfactory.

Size

Deformed round steel bar reinforcement is manufactured in sizes of 3/8 inch to 1-3/8 inches in diameter and square bars of 1-1/2 and 2 inches. The diameter or size of the round bars is shown on the bar by a number. The number designates the diameter in terms of multiples of 1/8 inch, for example #3 = 3/8-inch diameter, #7 = 7/8-inch diameter. This method of size designation is used for bar sizes of #2 (plain bar) through #11.

Wire fabric is designated by the spacing of the longitudinal and transverse strands and the size (gage) of steel wire. A designation of 612-25 (one way type) indicates that the longitudinal wires are spaced 6 inches; the transverse wires at 12 inches; the gage of the longitudinal wire is 2; and the transverse wire is 5 gage.

Square welded wire fabric may be designated as follows: 6x6-8/8 which indicates a 6-inch spacing of the wires and 8-gage diameter for each wire.

Onsite Storage

Steel reinforcement that is not to be used for an extended period should be stored off the ground and protected from the elements. Steel that is delivered to the site for use within a short period should be stored to prevent surface contamination with mud or other coatings. Piling on the ground is permissible under dry conditions. At the time of placement in the structure, the steel should be free from oil, grease, mud, paint, loose mill scale, and flaky rust coatings. A thin adhering coat of rust is not considered to be detrimental to bond.

BENDING DRAWINGS

The drawings prepared for the job should include a steel list and bending chart which shows the various bars by a designated letter or number, the size, number of bars required, location in the structure, and the dimensions for cutting and bending. If steel is purchased from a fabricating plant in cut and bent form, the plant will make the required bends, hooks, spirals, etc., according to accepted standards of the industry. The fabricator will itemize the steel list by bar designation, number of pieces, length, and usually will indicate the location the bar is to be placed in the structure.

Steel bent on the job should be formed to meet tolerances established by industry. For 90° and 180° bends and hooks the arc of the bend should be formed around a pin that is 6 times the bar diameter for #2 through #7 bars, and 8 bar diameters for bars #8 through #11.

All bent reinforcing steel should be inspected for cracks or other indications of stress that might reduce the tensile strength of the steel.

PLACING

Positioning

Accurate positioning of the reinforcing steel within the concrete is important. Steel required to resist structural stress must be placed in the location shown on the drawings. The proper location can vary depending on the kind of structure. Typical illustrations of steel location to resist stresses in structures is shown in National Engineering Handbook Section 19, Chapter 3.

Coverage

The specified limits of cover for all the steel as shown on drawings should be adhered to. Reinforcement steel for structural stresses is usually placed near one face of the concrete. The minimum cover is measured from the form or ground to the reinforcing steel and is measured in the clear.

Laps

Stress in a tension bar can be transmitted through the concrete and into another adjoining bar by a lapped splice. The amount of required lap is expressed as the number of bar diameters. The minimum lap usually will not be less than 24 diameters.

EMBEDDED ITEMS

Anchors

Bolts or other items are often required to be placed in the concrete. All embedded items should be placed and anchored prior to placing concrete to insure good bond and proper location. These items should be carefully checked prior to and during the placing of the concrete.

Dowels

Dowels are short steel bars that are installed to extend across an expansion-contraction joint. They are used to give support for grade and alignment between two adjacent segments of concrete. To perform properly, it is necessary that one-half of the bar be bonded to the concrete and the other portion treated to prevent bond with the concrete. The drawings should show the details for installation. Bond may be prevented by coating the steel with tar or heavy wrapping paper. Patented metal or plastic sleeves are also available. Additional clearance is needed beyond the unbonded end of the bar to permit free movement. No steel should extend across a joint of this type unless treated as specified. The dowel assemblies should be properly supported and anchored to maintain position and alignment when concrete is placed.

ANCHORAGE AND SUPPORTS

All steel reinforcement should be accurately located in the forms and firmly held in place during the placement of the concrete. Mats of steel used in slabs and the vertical and horizontal steel placed in walls should be tied with wire ties to form a rigid assembly.

Small precast concrete blocks which have a thickness equal to the required clearance or cover are very satisfactory for supporting mats of steel in slabs and for positioning vertical steel for proper cover. The support blocks should have a strand of the tie wire embedded in the block for use in anchoring the block to the reinforcing bars. For more complex structures the use of spacer bars, wires, chairs, or other devices may be required to prevent displacement of the steel. The use of wood or brick for support or spacing is not allowed.

INSPECTION

Prior to Placing Concrete

All reinforcing steel should be checked against the drawings to determine that the size, length, bends, location, and laps are as specified. The steel should be checked for coatings, sharp bends, or other damage. The steel should be firmly tied and have adequate supports and anchors to prevent movement. The position of the steel should provide the proper amount of cover, and no bars should extend within 2 inches of finish grade.

When wire fabric is used it is very important that the mesh is adequately supported and that the laps and ties are made as specified. Hooks or other methods of lifting the mesh to proper position after the concrete is placed should not be permitted.

While Placing Concrete

Constant attention is required to detect any displacement of the reinforcement and to see that the necessary corrections are made. The position of the vertical steel is often distorted by the placing and vibration of the concrete. Mats in slabs may move as a result of trampling by the workmen.

6. STRUCTURE DRAINAGE AND CONTROL OF WATER

PURPOSE

Structure drainage is required to provide for the relief of water pressures and to permit safe water movement through the foundation area. Control of water at construction sites is necessary to protect the foundation area and to maintain satisfactory construction conditions.

MATERIALS

Sand, Gravel, or Rock

Sand, gravel, or rock materials graded to be free draining (less than 5 percent of material passing the 200-mesh sieve) and blended to give a mixture that will resist soil movement into the drain material may be used to provide drainage for structures. All drain material should consist of dense particles having characteristics similar to the requirements for concrete aggregates. Particles smaller than 1/4 inch should be natural sand.

Perforated Pipe

Materials suitable for perforated drainpipe include corrugated metal, asbestos-cement, bituminous fiber, concrete, plastic or clay. The perforations normally consist of circular punched or drilled holes 1/4 inch to 5/16 inch in diameter, spaced 3 inches apart. They should be arranged in 2 or 4 rows parallel to the axis of the pipe. The individual rows are spaced 90° apart for 2 rows, and 90° and 160° for 4 rows. The length of pipe sections and the kind of joints depend on the pipe material. The more common type of joints includes bands, collars, or bells.

Weep Holes

Weep holes for relieving water pressure through the structure are preferably formed from nonferrous materials such as asbestos-cement, bituminous, clay, concrete, or paper. Pipe containing iron is structurally adequate but is often discouraged because of the rust staining the concrete.

TYPES OF DRAINS

Several types of structure drains are shown in Figure 17-2. Of these, the chimney drain and relief well types are seldom used at the work unit level.

Earth Dams

Toe Drains

Consist of sand and gravel, rock or perforated pipe, and are located in the downstream toe of the dam (Figure 17-2, Toe Drain).

Blanket Drains

Consist of a layer of sand, gravel, or rock placed over a portion of the downstream area of an embankment or the subgrade for a concrete structure (Figure 17-2, Blanket Drain or Wall Drain).

Trench Drains

May consist solely of sand-gravel or crushed rock or they may also contain a perforated pipe which discharges into an outlet. The drain may be located in the downstream foundation area or in the embankment (Figure 17-2, Trench Drain or Chimney Drain).

Concrete Structures

Subgrade Blanket

Structure locations, which involve high water table, commonly require a blanket of pervious material to provide free movement of water. Soft foundation materials may also exist at these locations and the use of blanket materials improves the stability of the foundation. The subgrade drain materials may also extend above the floor slab along the sidewalls to release water through weep holes (Figure 17-2, Wall Drain).

Perforated Drainpipe

This type of drain may be installed within the subgrade or in the drain materials adjacent to the walls to provide added capacity and more positive protection to the structure. Unrestricted outlets are required for the pipe drains.

Weep Holes

Weep holes may be installed in the floor slab and walls of the structure as required to provide drainage protection for the structure.

INSTALLATION

Filter Materials

For structure drainage, filter materials should be carefully installed as shown on the drawings. The failure of the drainage system can cause damage to or complete loss of the structure. Filter drain materials delivered to the site should be tested to verify quality and gradation. The material should be stockpiled and handled to prevent contamination with

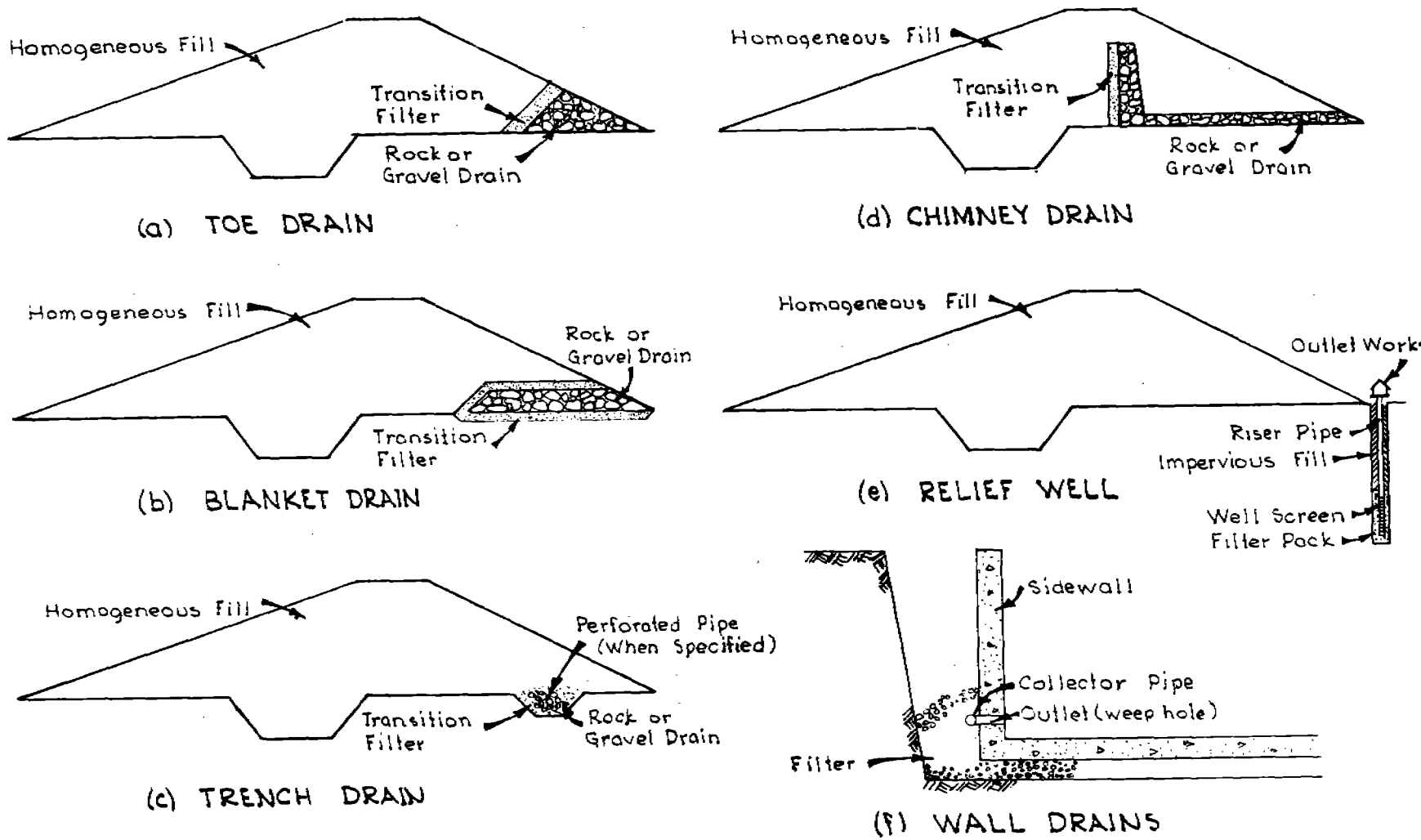

Figure 17-2 Type of structure drains

fine grained soils or other material that might impair its ability to function as a drain. The material should be placed by methods that will prevent segregation. When placed in deep excavations or under water the material should be lowered into place, using clamshell buckets, skips or other methods to prevent segregation. The thickness of the layers, surface finish and compaction should conform to the requirements shown on the drawings.

Perforated Pipe

Perforated drainpipe requires care in handling and placing to prevent damage to the pipe or its protective coating. All sections of the pipe should be inspected to make sure the perforations are open. Pipe treated with asphalt coatings requires special attention. The use of a wooden probe shaped to the proper diameter may be used to clear asphalt material from the drain holes without serious damage to the metal coating. During the installation of the pipe, inspection is required to determine that the location, grade, and alignment is as shown on the drawings. Also, see that the pipe is positioned so that the drain openings are symmetrically located at the bottom of the pipe and that the joint connections are tight and made according to the manufacturer's requirements. Pipe enclosed within a filter requires special attention to determine that the line and grade is maintained.

Weep Holes

Pipe material used for forming the weep hole should be cut to proper length and anchored in position prior to placing concrete. The pipe, when so specified, should extend into the filter materials. Hardware cloth or screen materials should be installed in position as shown on the drawings to prevent the entrance of small animals that could hinder operations of the drain. All weep holes need to be checked after construction to see that they are free from obstructions.

SITE DEWATERING AND CONTROL OF WATER

Foundations

Dams and Dikes

Adequate foundation preparation and proper placement of embankment is dependent on a water-free site. Embankments for dams should not be placed in water or on a soft foundation. The first job on a wet site is to remove the water and prevent more from entering the foundation area. The methods may vary with site condition and location. Methods that have application include diversion of streamflow above the site, drainage by gravity using ditches through the site, pumping from trenches or sumps adjacent to the foundation area, and for extreme conditions a system of wells or well points. Some sites are wet only during certain seasons of the year. For such locations it is best to do the construction when the site is dry.

Concrete Structures

The need for dewatering the structure site is important and similar methods used for earth dams may be used effectively. Concrete structures should be installed only on a firm subgrade. Wet areas require control of water to make the necessary excavation, and for placing drain or subgrade materials. All concrete should be placed in the dry. No standing or flowing water should come in contact with the concrete until the mixture is well set up.

Borrow Areas

Borrow areas containing materials suitable for impervious embankment construction require careful moisture control. Excess water within the borrow area, regardless of source, can increase costs and delay the work. Some borrow areas subject to flooding may be protected by diversions and dikes. For certain conditions it may be necessary to lower the water table in the borrow area by pumping. The probability of flooding versus the cost of an alternate borrow area should be considered in the design phase.

Diversions

The construction of a diversion should be given high priority for controlling streamflow that passes through a construction site. The amount of channel capacity required for many locations is economical and the construction is not difficult. If the diversion cannot be routed to completely bypass the construction area, it may be possible to route to a location that results in a greatly improved working area.

7. PIPE CONDUITS

MATERIALS

The manufacture of pipe conduits involves a large variety of materials and processes. Pipe materials that have been determined to meet the minimum requirements for specific practice installations are outlined in National Engineering Handbook, Section 2, Engineering Practice Standards, national engineering memoranda and state supplements to national policy.

A careful review of the reference standards as they apply to the site condition is desirable to insure that the pipe meets the qualifications before installing the materials.

HANDLING AND STORAGE

Pipe should be transported and unloaded by methods that will prevent damage to the pipe or the surface coating. Pipe should not be permitted to "free fall" from trucks, or be lifted by means of a sling running through the pipe. If the coatings are damaged, the affected areas should be cleaned and coated with zinc paints or cold tar materials as recommended by the pipe manufacturer.

Pipe should be stored near the site to eliminate extra handling. Piling or decking in ricks should not be permitted. Paved invert pipe should be stored with the paved area at the bottom. All pipe should be inspected prior to installation. Materials that are damaged or otherwise fail to meet specifications should be rejected.

INSTALLATION

Trenching

Earth Excavation

Excavation for pipelines should be to the lines and grades shown on the drawings with adequate checks made to verify the accuracy of the cut. Vertical wall trenches in most materials are a safety hazard when depths exceed 4 feet. Adequate shoring or a suitable movable shield should be provided to protect workmen while laying pipe.

Rock Excavation

Excavation in rock should be made to the limits shown on the drawings. It is common practice to overexcavate the depth to provide space for fine grained subgrade material used as bedding for the pipe. It is important that the rock excavation be checked to make sure no high spots exist.

Bedding

Earth

Bedding formed in earth requires that the subgrade be molded to a specific depth to fit the outer surface of the pipe. The pipe should bear against undisturbed or compacted earth for its entire length. For corrugated pipe, use a loose mellow bedding material about 2 inches thick.

Granular Material

Bedding formed from granular material requires the placing of sand, gravel or crushed rock to a specified depth in the bottom of the trench. The granular material should be consolidated, and shaped to fit the outer surface of the pipe for its entire length.

Concrete Bedding

The bottom of the trench should be shaped as shown on the drawings, and the concrete thoroughly tamped or vibrated around the bottom of the pipe. The pipe may be supported on concrete blocks, when so required, to provide additional thickness of the bedding. Care is required in placing concrete to prevent lifting or displacing the pipe.

Concrete Cradles

Pipe cradles consist of complete or partial encasement of the conduit. The dimensions and other details for construction should be shown on the drawings. It is necessary to support the pipe, to proper line and grade, on precast or poured concrete blocks. Concrete should be placed on either side of the conduit in approximate equal amounts. Care is required in consolidating to make sure concrete makes complete contact with the pipe and that the pipe remains in correct position.

Jointing

Premolded Gasket

Bell and Spigot--It is common procedure to lay bell and spigot pipe with the bell upstream. Holes are excavated in the subgrade to receive the bell and eliminate uneven pressure. Just before making the joint, the surfaces of the bell and spigot should be cleaned and lubricated with a light film of vegetable compound. The premolded rubber gasket should be stretched uniformly as it is placed in the spigot groove. The joint is connected by a pulling or jacking force applied so that the spigot enters squarely into the bell. When the jointing is nearly complete the position of the rubber gasket is checked with a feeler gage to make sure the gasket is properly positioned; then the spigot is completely pulled into position.

Sleeve Joints--Conduits jointed by the use of sleeves or collars include all pipe ends formed as spigots with the sleeve connector acting similar to a bell. Prior to jointing, all surfaces and rings are cleaned and lubricated as required for bell and spigot pipe. One end of the sleeve or collar may be installed prior to placing the pipe in the trench. Final jointing is accomplished as for bell-type conduits.

Cement Mortar

Bell and Spigot--Cement mortar for joints and bands is mixed in the proportion of one part portland cement to two parts sand and sufficient water to produce a workable mix.

The pipe joint surfaces should be clean and moist. Sufficient mortar is added to the lower portion of the pipe bell to make a smooth inner surface. The spigot end then is completely jointed. The remaining annular space between the bell and spigot is completely filled and dressed off with the outside surface of the bell. The interior joint is filled and pointed to a smooth surface. A swab may be used to finish the interior surface of small diameter pipe.

Tongue-and-Groove--The jointing surfaces of the pipe should be clean and moist. The pipe is placed on end with the groove (female end) up. After the groove is covered with mortar the pipe is carefully shoved over the tongue end of the pipe previously laid. Surplus mortar should appear on the interior and exterior surfaces of the joint, indicating that the mortar completely fills the joint. Surplus mortar is carefully removed after the pipe is placed to line and grade.

Banding--External bands of mortar are added to the newly installed pipe to increase the watertightness of the tongue-and-groove joint. The area to be covered should be clean and moist. Sufficient mortar is placed on the ground under the end of each pipe as it is laid to make a continuous band.

Banding operations usually follow 3 to 5 joints behind the laying operation to prevent movement and damage to the band. The banding mortar is shaped and pressed into place by hand. A brush or light trowel finish may be added as required.

Curing--All external mortar joints, bands or collars should be protected by covering with moist earth, sand or burlap and kept moist for the specified curing period, normally 3 days. Backfilling or hydrostatic pressure should not be applied to the pipe until approval is given.

Welding

Steel pipelines may be joined by welding. The pipe should be uniformly round with smooth end surfaces so that a tight butt weld can be made. The surfaces to receive the weld should be free of all coatings. The welder should be qualified and have all necessary equipment to perform the work. The pipe should be so positioned and supported that the weld can be performed without turning or rolling the pipe while welding. The current, arc length, angle and travel speed should be governed to produce a smooth, uniform, well-formed bead. No undercutting, overlapping or piling up is permitted. The completed pipeline should be pressure tested to insure satisfactory workmanship before accepting the work.

The surface of the welds and all damaged coatings are treated with paints and wrappings to provide protection that meets the requirements specified for the work.

Bolted Couplers

Metal pipelines may be joined by bolted assemblies. The most common couplers for smooth metal pipe are flanges and Dresser type units. Flanged ends are attached to the pipe at the factory and can be easily bolted in the field to form a watertight, high pressure joint. Good quality gaskets should be used and all bolts uniformly tightened but not overstressed.

The Dresser coupling includes flanges and gaskets that provide a watertight pressure joint, and also permits limited movement of the pipe within the joint. This patented joint is often specified at predetermined intervals on lines having rigid joints to permit movement caused by temperature or other causes. The end of the pipe to be joined should be uniform in shape and free from all coatings. The coupling is assembled according to the instructions of the manufacturer and uniform tension applied to all assembly bolts.

Corrugated metal pipe is joined by coupling bands which may be manufactured with angle iron bolt type assemblies or rolled bands tightened with rod lug type tighteners. The pipe ends to be joined should be spaced as required to permit the grooves in the band to properly seat into the grooves of the pipe. Tapping the band with a hammer during the tightening process will aid in seating the band. When rubber gaskets are specified, extra care is required to properly position the gasket and the band to form a watertight joint.

Open Joints

Not all pipelines require watertight joints. Concrete and clay pipe used for drainage is laid with open joints. Tongue-and-groove and square end joints are the most common type. The pipe should be uniformly bedded and laid to provide a small space between adjoining sections to permit free entrance of water. The joint gap and cover protection should be installed in accordance with the requirements shown on the drawings.

Backfill

Quality of Materials

Backfill placed in contact with the pipe should consist of select material free from organic material, frozen clods, and rock which exceed 2 inches in diameter. Random material, which may include larger stone, may be used after the specified cover is in place.

Placement

Special care is required in lowering and placing backfill around pipe conduits. This usually requires hand labor to maintain equal fill on either side of the pipe to prevent displacement. Heavy equipment may be used to complete the placement of uncompacted backfill. Surplus material is added to the surface area of the trench location to compensate for future settlement.

Compaction

The requirements and limits for compacted backfill should be clearly outlined on the drawings. Backfill compacted to a specified density will require inspection of the quality of the material, the moisture content, and the in-place density. Backfill for conduits constructed in conjunction with water impounding embankments requires special attention due to the hazard of water movement along the conduit. Precaution should be taken to prevent the lifting or changing of alignment of the conduit during compaction.

8. WATER CONTROL GATES AND VALVES

KINDS

Slide Gates

Slide gates are made for a wide range of sizes and operating heads. The cast iron, steel, or fabricated steel gate assembly consists of a movable slide, which may be round, square, or rectangular in shape, and a connecting stem with an attached geared wheel or crank for opening and closing the slide. The slide is held in position by angle iron or other framework. Wedge blocks are properly positioned to cause the slide to make contact with a stationary frame which provides a watertight closure. Slide gates are manufactured for seating heads varying from 5 to 100 feet. They are used for control of water in storage reservoirs, canals and stream diversion, and on-farm irrigation distribution systems.

Flap Gates

Flap gates are used to control flow automatically. They are used to prevent backflow through pipes under dikes and levees, yet permit drainage at low tide or streamflow stages. The cast iron, steel or fabricated steel assemblies are available in various sizes and shapes. The assembly consists of a gate hinged at the top or upper quarter and a matching seat that forms a watertight closure. The seat may be attached to the pipe or installed as an integral part of a concrete headwall.

Irrigation Control Gates

In addition to the standard low head slide gates commonly used, there are various other types and kinds of products used to control the flow of irrigation water, such as metal turnouts and alfalfa gates. These assemblies may be attached to metal or concrete pipelines, concrete control structures, or concrete ditch linings.

High Pressure Valves

High pressure valves are commonly used to control large flows or high pressure streams. This type of valve usually is of a gate or globe type design. These valves require quality material and finish, and the cost is relatively high. They do not have widespread use in small installations, but may be included in sprinklet systems or high pressure water systems.

Low Pressure Valves

Low pressure valves include the washer and ball seat type and low head varieties of gate valves. They are used in farm irrigation systems and on individual lines in house or other building installations.

QUALITY AND ACCEPTANCE

Standard Brand Names

Acceptance based on detailed specifications and tests is not widely used for small projects. Requirements usually can be dictated by specifying a brand and model "or equal" to illustrate acceptable quality. This procedure is effective for projects financed by the individual owner.

For contract construction involving federal funds the required purchase of specified brand names is not acceptable under present policy. Brand names mentioned in the contract can only denote a reference of quality and workmanship, and other products determined to be of equal quality may be furnished by the contractor.

Reference Specifications

Manufactured materials commonly used in construction are controlled and tested by procedures subscribed to by industry. The quality of the individual materials and performance tests are outlined in references such as "American Society for Testing and Materials" (ASTM), "Federal Specification," "American Water Works Association" (AWWA) and many others common to a specific type of industry. For construction that requires materials of controlled quality, it is general procedure to include in the specifications or on the drawings a request that the product be manufactured to meet the requirements of a specific reference specification.

Manufacturer's Certification

The requirement that the contractor or supplier furnish a certified certificate that the materials meet the requirements set forth for the work may be included when deemed necessary by the Service. The advantage of the certification is to have a record showing that the supplier met the requirements.

Visual Inspection

All materials delivered to the construction site should be inspected. A certification of quality does not insure against damage during handling and transportation. A thorough knowledge of the reference specification and a detailed examination, including applicable measurements and superficial finish, are important parts of construction inspection.

ONSITE HANDLING AND STORAGE

Gates and valves should be handled in a manner to prevent bending, warping, chipping of machined surfaces, damage to surface coatings or other treatment that would prevent proper functioning. Heavy duty slide gates should not be further disassembled on the job without approval of the manufacturer, since factory adjustments are difficult to duplicate in the field. All parts and assemblies should be stored off the ground. All parts should be accounted for on delivery and adequately protected from the elements and loss.

INSTALLATION

Anchor Bolts

Metal anchor bolts positioned in the concrete often are required to hold gate assemblies in place. The manufacturer of the gate should provide a detailed drawing or template for use in positioning the bolts in the form. If the gate or valve assembly is on the job, it is recommended that the bolt setting be carefully checked with the actual gate. To prevent delay and additional cost, all anchor bolts should be placed at the exact spacing and depth specified. Bolts positioned in the forms need to be anchored to maintain alignment when the concrete is placed. Bolts embedded in unformed concrete require that the concrete be consolidated near the bolts to form a good bond.

Field Assembly

Valves

Valves are attached to provide a watertight connection, usually by means of threads or bolted flange connections. Care is required to prevent overstressing the assembly by using excessive wrench pressure while tightening. Bolted flange connectors should contain a thin gasket between the flanges. The individual bolts should be tightened uniformly and only as required to prevent leakage.

Slide Gates

Slide gates are attached to metal pipe, concrete headwalls, embedded metal spigots, or precast metal wall frames (thimbles). Gates designed for high heads usually are installed with some type of thimble. The thimble should be anchored in place and properly embedded in the concrete. The use of a thimble is desirable since it provides matched units and permits attaching the gate assembly at a later date. The contact surfaces of the thimble and the gate are machined; however, it is a good practice to use a gasket or mastic as recommended by the manufacturer to form a positive watertight connection. The anchor studs that hold the gate should be uniformly tightened, being sure not to overstress the studs.

Automatic Flap Gates

Flap gates are attached to concrete walls or to pipe, similar to slide gates. The gate seating face should be installed with the face in a vertical plane or with the bottom of the seating surface projecting slightly forward. The proper positioning of the seating surface is important for proper performance of the gate.

Concrete surfaces to receive a flat back type seat casting should be smooth and true to line. Anchorage to an uneven surface can damage the casting.

After complete assembly, the gate should be checked to make sure the hinges are adjusted to permit uniform contact with the seating surface.

Adjusting and Testing

In addition to proper assembly of the gate, it is important that the hoist be placed in correct alignment with the gate and that the gate stem and guides are adjusted to permit free movement. The gate should be raised and lowered throughout its full range and adjustments made, as required, to permit smooth operation free from unusual resistance or binding.

OPERATION AND MAINTENANCE

Overstressing

It is important that undue effort is not exerted in opening and closing gates and valves. A little extra force applied to the control transmits extreme pressure through the threaded stem. It is a good practice to install stop nuts on the gate stem to limit the range of travel of the gate and to prevent overstressing of the gate in the closed position.

Surface Coatings

Water gates and valves are subjected to conditions which cause surface deterioration, such as wetting and drying, abrasion from water borne materials , and ice and freezing action. These conditions cause rapid damage to surface coatings. It is important that the surfaces be examined periodically, and repairs made as required to prevent rust and other damage. The coating materials should be compatible with the existing coatings and of a quality

to provide maximum protection. The surfaces to be treated should be clean and dry and the material applied in accordance with the manufacturer's instructions.

Protection From Fire

Gate installations that collect weed growth or streamflow containing trash that may collect on the gate can cause maintenance and operation problems. Fire should not be used to remove these materials. Damage to surface coatings will result and it is possible under certain conditions to cause warping or other damage to the gate assembly. Also, intense heat may damage the surfaces of concrete structures. Often trash barriers may be constructed upstream from the gate that will make trash removal by burning practical.

Lubrication

All gate assemblies should be lubricated in accordance with the manufacturer's instructions. Lubrication of the threaded portion of the gate stem and the control assembly is especially important to prevent wear.

9. METALWORK

MATERIALS

Steel Shapes

Angles, channels, and wide flanges are the most commonly used standard steel shapes. These materials are manufactured in a wide range of dimensions. Structural steel meeting the requirements of ASTM A-7 (Steel for bridges and buildings) is available at most shops and is of adequate quality for normal installations. High strength steels may be specified for use to meet extreme conditions.

Steel Pipe

Seamless and welded black and zinc coated pipe meeting the requirements of ASTM A-120, ordinarily used for steam, water, gas and air lines is satisfactory for use in small structures. It is available from jobber's supply. The pipe is manufactured in standard, extra strong, and double extra strong weights. Standard thread or weld connections may be used for fabrication.

Bolts

Low carbon steel externally and internally threaded standard bolts that meet the requirements of ASTM A-307 usually are available from local hardware dealers and have adequate strength for most work. These fasteners are available in square or hexagonal heads, and may be supplied with zinc coatings when field conditions demand extra protection.

KINDS OF INSTALLATIONS

Trash and Debris Racks

Fabricated assemblies which may consist of steel shapes, gratings of steel or pipe, or a combination of these materials are necessary for the control of trash that may cause clogging of water control structures. Typical structures where trash guards may be required include outlets for storage reservoirs and inlets for siphons, pipelines, pumping stations, storm drains, irrigation diversion and control structures and farm drain tile systems.

Guard Rails

Guard rails installed for the safety and protection of maintenance personnel and the public should be made a part of all structures that have inherent hazards. Assemblies of pipe and standard pipe fittings are economical, attractive, and easy to install.

Specially designed structural shapes or heavy channel sections may be used for road guard rails.

Other Structure Components

Metal is an economical construction material, and has wide use as parts of structures made from other materials. Typical examples include: collapsible or removable stanchions for stop log dams; slide grooves for stop logs; frames for trash screens; weir plates for water measurements; piling; posts; and many other minor units.

WORKMANSHIP AND ASSEMBLY

Cutting and Fitting

All metal fabrication should be performed by competent workmen. Metal shapes should be uniform in cross section and free from bends or distortion. Cutting and fitting should conform to plan dimensions. Burned or sheared surfaces should be accurate and neatly finished. All surfaces to be joined by welding should be ground and shaped to make uniform contact.

Bolted Connections

Bolted connections are not commonly used in assembly because of the extra labor cost. All holes should be drilled at right angles to the surface of the metal to provide uniform bearing surface for the bolt head and nut. Bolts should have sufficient length to extend completely through the nut when in final position. All bolts should be tightened to make a rigid joint, but not overstressed.

Welding

All welds should be made by competent operators. The electric arc process is the most practical and is recommended for all types of assembly. The metal surfaces to be welded should be free from slag, paint, grease, oil, moisture or other foreign materials. The completed weld should have good penetration, and be free from pin holes, undercuts, and cracks. The weld should present a uniform cross section complying with the location and dimensions shown on the drawings. Assemblies warped or distorted due to uneven or improper welding heat should not be accepted.

Anchorage

Metal assemblies are often anchored to foundations or other parts of the structure. Anchorage by welding to metal embedded in concrete requires care to prevent heat transmission that would damage the concrete.

Some assemblies are installed on concrete by means of lugs or anchor bolts. These should be carefully positioned in the forms and the concrete consolidated around them so that complete contact is made. Metalwork attached by bolts often presents assembly problems in the field. It is desirable to have the metal unit on the job at the time anchor bolts are set so that proper spacing can be measured. An alternate is to burn the holes to match the in-place anchor bolts at the job site. Holes made with a welding torch should be well formed to proper size. All material that protrudes beyond the normal metal surface due to the burning operation should be removed. Anchor bolts should be washered and wrenched tight. Holes drilled in concrete or wood for expansion or lag screws should be accurately located and made to proper dimension. The screws should be tightened for maximum anchorage.

SURFACE PROTECTION

Paint

All metal surfaces not embedded in concrete should be given a protective coating to minimize the formation of rust and corrosion. Coatings of coal tar mixtures, vinyl, phenolic or red lead and aluminum paints are commonly used. The metal surfaces should be thoroughly cleaned to remove rust, scale, dirt, oil and grease. The surfaces should also be dry and have a temperature above 40 degrees F. at the time of treatment. Paint materials should be mixed and applied as recommended by the manufacturer. The coating should be applied at a rate that will result in a uniform surface free from runs, ridges, or drips. Two or three coats are normally required to produce an adequate protective film. Sufficient time should be allowed for drying, and the surface of each coat cleaned as necessary before applying the next coat.

Galvanizing

Metal surfaces should be thoroughly cleaned prior to adding zinc coatings. Insofar as practical, cutting, welding and complete assembly should be made prior to galvanizing, thus preventing damage to the coatings. The

hot-dipped process is commonly used; however, satisfactory coating can be attained by the electro-galvanizing process. Visual examination should be made at the time of installation to see that all metal surfaces are covered and that the coating is free from blisters, flux, black spots or projections. The coating should form a tough bond with the metal, one that will not peel or crack when tested with a sharp knife. The metalwork should be installed in a manner that prevents abrasion or other rough contact that damages the coating.

10. TIMBER FABRICATION AND INSTALLATION

MATERIALS

Lumber

Inspection and Grading

Lumber is graded by visual examination of the piece to determine the location, size and nature of knots and other surface features which may affect the strength. Associations exist over the country that establish grading and dressing rules that apply to lumber manufactured from specific species of trees.

Marking and Stamping

To verify the quality of lumber delivered to the job, it is necessary to know the standard markings used by the Association or inspection bureau. "Construction," "standard" or "utility" are the more common grades used for structures. Grading rules and markings are available for inspection at most commercial lumber yards.

Hardware

Machine bolts and dowels should be medium steel or wrought iron with square heads and nuts.

Washers may consist of cast ogee gray iron or malleable castings, cut steel, or wrought iron flats.

Nails and spikes should be cut wire of commercial quality.

All hardware items should be galvanized as specified on the drawings.

Preservatives

The treatment of lumber and poles is recommended to increase the durability of the wood fiber under various conditions of exposure. Commonly-used preservatives consist of creosote-tar mixtures or various compounds of arsenate, zinc, chromium or pentachlorophenal. The preservative may be applied by brushing or dipping on the site. Field application should be in accordance with the manufacturer's instructions.

Lumber and piles may also be purchased that have been pressure treated by commercial plants. Commercial processing is usually performed by methods that conform to standards established by the "American Wood Preserver's Association" (AWPA). Pressure-treated materials should be stamped by the processor to indicate the name of the plant, kind of preservative and the pounds per cubic foot that was absorbed by the wood.

KINDS OF STRUCTURES

Irrigation

Flumes

Structures that convey water for continuous periods should be constructed from good quality, finished tongue-and-groove lumber. Materials of this type are kiln dried and require slight spacing of each piece to allow for the swell. The lumber used for substructures and framing should be the specified grades.

Lumber for flume construction requires expensive grades, and the project should be carefully planned and constructed.

Checks, Drops and Turnouts

Irrigation structures of this type are often shop assembled. The quality of the materials may vary depending on cost and availability of the required lumber. It is desirable to have lumber that is free of loose knots, splits and checks. The surfaces may be finished or unfinished. The structure should be relatively watertight, with strength to resist water and backfill pressures.

Chutes

The quality of material required for chute construction depends on capacity, frequency of use, and the hazard of the site. Where leakage can result in serious erosion or endanger the structure, good quality materials and construction are necessary. The design and precautions used in constructing flumes are applicable to chute construction.

Farm Bridges

Farm bridge construction requires lumber that is capable of supporting tractors and other heavy loads. Inspection of the materials furnished to the site is important since safety to human life is involved. The lumber should show the specified grade stamp and, when applicable, the preservative treatment applied.

Components of Other Structures

Lumber materials also are used to construct replaceable parts of structures that are made primarily from more permanent materials. Typical examples include stop logs, catwalks, and shelter houses for gate controls.

SIZES AND LENGTHS

Rough (Unfinished) Lumber

Lumber size is denoted by thickness, width and length, in that order. The sizes listed on the drawings are nominal dimensions. For unfinished lumber, not kiln dried, the material usually meets or exceeds the nominal thickness and width.

Dressed Lumber

Dressed lumber sizes are less than the nominal size. For example: after dressing, 1 x 4 flooring measures 25/32 inch x 3-1/2 inches; a finished 2 x 4 measures 1-5/8 x 3-5/8. For lumber over 2 inches thick, the thickness and width are 3/8 inch scant for faces under 8 inches and 1/2 inch for faces over 8 inches. Lumber materials are available in multiples of 2-foot lengths from 4 to 20 feet. Structure grades can be furnished in longer lengths on order.

STORING AND HANDLING

Piling on the Site

Lumber should be piled off the ground on supports so placed that proper shape of the material is maintained. In stacking, one end should be raised to provide drainage. Kiln-dried and finish lumber should be stored under cover.

Surface Damage

Methods used in transporting and handling should prevent damage to the surface faces or edges. This is especially important for treated lumber or poles. Sharp-pointed tools or hooks should not be used to handle treated timber. Rope or other nonmetallic materials are commonly used for handling on the job.

INSTALLATION

Cutting and Framing

All carpentry should be done by competent workmen. Measurements should be accurate and cuts made true to line and shape. Joints should have even bearing without the use of shims. Insofar as practical, cutting, framing and boring should be accomplished prior to adding preservative treatment.

Nailing

Nails and spikes should be driven straight and true to position and only until the head is just flush. Deep hammer marks cause damage to the wood fiber.

Bolting

Holes for bolts should be bored 1/16 inch oversize, and at right angles to the face of the material. Bolts should be provided with washers of the correct size at both ends. The bolts should not be tightened to cause deformation of the wood fibers.

Treating Damaged Surfaces

Field cuts or drilled holes made in treated lumber should be coated with the same preservative as used in the original process. Likewise, damaged surfaces or corners of all treated lumber should be treated in the field. Factory or shop paint coatings that are damaged prior to or during installation need to be touched up to restore appearance and to provide satisfactory protection.

11. MASONRY

MATERIALS

Stone

Stone (rock) suitable for structures should be:

1. Hard and durable.

2. Available in blocks of sufficient size to form the elements of the structure.

3. Of suitable texture for shaping as required.

Limestone and sandstone are commonly used in small structures since these materials are widely distributed and are more easily quarried and shaped for construction purposes. Since rock can vary in quality, advice should be requested from a geologist if the acceptability of a specific source of rock is doubtful.

Concrete Blocks

Preformed concrete blocks may be purchased from commerical manufacturers. The process of manufacture includes the use of a dry concrete mix which is placed in a metal mold and compacted by mechanical pressure or tamping equipment. Proper mix and operating procedure permits immediate form removal for reuse. Due to the relatively dry mix and method of manufacture, the product tends to be porous and may not prove to be as durable as stone masonry under severe operating conditions. The blocks are commonly manufactured in 8 x 8 x 16 inches (regular building block) and 8 x 8 x 8 inches, half size. Other dimensions may be available at certain locations.

Mortar

Masonry, whether constructed of stone or concrete blocks, requires a mixture of sand and cement to join the separate components into an impervious stable mass.

Cement

Should be portland cement of the specified type, which may vary depending on the soil and water conditions that prevail. Type I or Type II are usually satisfactory.

Sand

The fine aggregate should consist of clean, durable particles which meet the requirements for aggregate used in concrete manufacture. Sand that passes the number 16 sieve gives better workability and is preferred.

Water

Mixing water should be free from injurious amounts of oil, acids, salts or organic matter. Water from domestic supply should be used when available.

KIND OF STRUCTURES

Masonry is suitable for construction of small erosion and water control structures. The use of concrete blocks has economic advantage due to the extra labor usually required in obtaining and shaping stone material. Masonry has low resistance to tensile forces. Vertical stone walls require designs that provide the necessary stability by utilizing the weight of the material to resist earth and water pressures.

Walls constructed with concrete blocks that have hollow cores may be reinforced by matching and filling the openings with good concrete. Added stability may be provided by inserting vertical reinforcing bars into the blocks before filling the openings with concrete.

Drop Structures

Structures of good quality stone give economical service under moderately severe operating conditions, which include heavy flows and freeze and thaw temperatures.

The stability and bearing capacity of the foundation is very important for masonry structures. They have high unit weight and the wall sections often require considerable thickness to provide stability. Cracking due to differential settlement can result in failure of the structure.

Concrete blocks are not commonly used for high drops or for operating conditions that include continuous flows and severe weather conditions.

Chutes

Stone masonry has some application for small chutes, provided high velocity flow is not involved. Usually chutes are installed in locations

which involve short, steep profiles where the erosion can be controlled more economically with pipe or concrete lining.

Concrete blocks are not recommended for chute construction.

Checks and Turnouts

These small field structures may be constructed from masonry and will perform satisfactorily, provided good quality materials and workmanship are obtained. Stone materials are not commonly used due to the labor required to provide and shape the rock.

Concrete block masonry has considerable application because of the uniformity of shape and the availability of material supply. Anchor bolts for stop log angles or formed notches may be readily adapted to the job requirements. Structure designs based on concrete blocks usually include a concrete floor slab and cutoff walls to assure stability and good performance.

INSTALLATION

Satisfactory life and performance of any structure depends on good construction procedures throughout all phases of the work. The following operations require close adherence to requirements outlined in the plans and specifications.

Foundation Preparation

After the excavation is completed to the lines and grades, the subgrade should be inspected to see that the foundation material is well compacted and has adequate bearing capacity to support the structure. Uniformity of the exposed materials and the absence of any conditions that would result in uneven settlement is necessary to prevent cracking and displacement in the masonry. Wet sites, unless drained and stabilized, should not be used.

Batching and Mixing Mortar

Mortar should be carefully batched by volume or by weight to provide the proportions of cement and sand specified for the work. A mix of 1 part cement to 2 parts sand is commonly used for the initial layers. Pointing mortar, when required, is often mixed 1 part cement to 1 part sand. The amount of mixing water should be limited to the minimum amount that will produce a workable mix, but preferably on the dry side to reduce shrinkage and cracking. The mortar should be uniformly mixed and used within 45 minutes. Machine mixed mortar tends to be more uniform and is preferred over hand mixing.

Placing Stone or Blocks

The size and finish of the individual stones and the methods of laying should be shown on the drawings. For conservation structures, the requirements for shaping or cutting to provide joints having less than 1/2 inch

between surfaces of adjoining stones (Ashlar Masonry) can rarely be justified. Rubble masonry, which consists of unsquared stone, is more economical and is adequate for small structures.

The method of placing the stone in each course may be specified as Range Masonry, in which a course is the same thickness throughout; Broken Range, in which the course is uniform in thickness for only parts of its length; or Random Masonry, which means that the stone is not laid in courses.

Stone for rubble masonry, when placed, should be clean and dust free. Sharp acute angles should be removed from the block. The stone should be kept moist for an hour prior to bedding in the mortar. Other requirements to be considered are:

1. The largest stones should be used in the foundation or lower portion of the walls.

2. Each stone should be laid on its broadest face.

3. Stratified stones should be laid with the strata perpendicular to maximum pressure, usually horizontal.

4. No joint in any course should be directly above a joint in the course below.

5. Do not move a stone by sliding after it has been bedded in the mortar. To prevent moving other in-place stone, lift the stone to be moved and reset it in proper position.

Concrete blocks usually are placed in a uniformly coursed pattern (range masonry) with evenly distributed overlapping or bonding of each course. Half-length blocks are used as required to provide the proper spacing for each course. The blocks should be well moistened just prior to placing in the bedding mortar.

Placing Mortar

Adequate mortar should be used to completely surround the jointing surfaces of the stone. Due to the irregular surfaces the thickness of the mortar will vary from a minimum of approximately 3/8 inch to the requirements to completely fill all voids. Adequate bedding mortar should be evenly spread so that the stone can be lightly tapped to insure complete contact. Often rock spalls can be embedded in the mortar to reduce the space and save mortar.

When so specified, the exterior edges of the joints should have the mortar recessed about 1 inch to receive pointing mortar. The recessed areas should be moistened just prior to applying the pointing mortar. Proper sealing of the joints is important to prevent the entrance of moisture which may cause freeze-thaw deterioration.

The jointing surfaces of concrete blocks should be completely surrounded by approximately 1/2 inch of mortar. The bedding layer should be uniformly spread and the jointing ends of the blocks coated prior to placement. As the block is placed, it should be lightly tapped to line and grade and the exposed joint surface finished flush and smooth. A chalk line set to line and grade is recommended when laying long walls.

Curing and Protection

Mortar used in masonry has a high cement content and is subject to quick set and high shrinkage. In hot weather the masonry should be kept moist for 2 or 3 days. Wet coverings, fog nozzles, or spraying may be used. Masonry construction should not be performed if freezing temperatures are anticipated, unless adequate cover or housing is available to protect the structure. The mortar should be protected from freezing for a minimum of 5 days.

12. ROCK RIPRAP

MATERIALS

Quality of Stone

Riprap consists of stone of various sizes, placed compactly or irregularly, to prevent the scouring action of water.

Stone used for riprap should be dense and hard enough to withstand exposure to air, water and freezing temperature. The suitability of a specific source of stone may often be evaluated by study of the performance of the rock used on other projects. For stone of unknown quality, it is desirable to have an appraisal made by a geologist. Some stone appears satisfactory at the time of harvesting but may disintegrate within a few years. Rough angular stone reasonably well graded in size, as commonly produced in quarries, is the preferred type of material. Smooth rounded surface stone does not interlock or resist movement as well as quarry stone.

Stone for hand-placed construction may be specified for special appearance and to utilize thin-bedded material (6 to 12 inches) which may be shaped and placed on edge.

Bedding

Sites to be riprapped, which include steep earth banks of stream channels or dams, often require additional protection to prevent the erosion of fines from under the stone blanket. This erosive action by water may cause uneven settlement of the stone and failure of the riprapped section. For these conditions a layer of sand, gravel, rock spalls, or a combination of these materials is placed on the earth slope to the specified thickness. Usually 4 to 8 inches is sufficient. These granular materials form a bedding layer that prevents erosion of the underlying soil and supplements the riprap protection. All materials used for bedding should be hard, durable, and capable of functioning for the life of the rock riprap.

Grouted rock riprap installed at sites having questionable drainage characteristics may require a layer of drain material placed beneath the riprap. This material should meet all the requirements previously specified for other types of stone structures.

Grout

Grouted riprap consists of loose rock completely bonded into a solid mass by filling the voids with a mixture of concrete. The grout is a regular concrete mixture with a limitation on the maximum size of coarse aggregate, usually 3/4 inch. All ingredients should be of a quality normally used for other concrete construction. The mix should be proportioned to contain a minimum of 5 bags of cement per cubic yard and produce a slump within a range of 6 to 11 inches. The grout should be machine mixed. Often transit mixers can deposit the grout directly upon the in-place rock sections.

ADAPTABILITY

Loose Rock Riprap

Machine or hand-placed riprap has proven to be a satisfactory construction material for protecting all classifications of soils from erosion caused by water under medium to low velocity flow.

Structures that may be protected with loose rock include stream channel banks, constructed slopes for dams and dikes, inlet and outlet sections adjacent to various kinds of water control structures, bridge abutments, and culvert inlets and outlets. The determination to use rock riprap for a specific project should be based on the site conditions and the comparable costs of installing other permanent types of protection.

Grouted Rock Riprap

Grouted rock is suitable for protecting the same site situations that are adapted for loose rock riprap. Grouted rock provides added stability to resist high velocity flow and ice action. The use of grout also makes it possible to utilize small stone that would not be adequate if placed as loose riprap.

INSTALLATION

Foundation Requirements

The foundation requirements for rock riprap are similar to those for concrete and other types of permanent structures. The surfaces on which rock or bedding materials are placed should be well compacted and stable. The foundation excavation for the toe sections for streambank protection should be down to an elevation that is safe from scour or degradation of the channel bottom. Displacement of the toe rock removes support for adjacent stone, and the chain reaction may result in complete failure of the riprap section. It is also important to make sure that the beginning and ends of the treated section are adequately entrenched into the banks to prevent undermining.

The stability and drainage of the foundation for grouted rock riprap is essential, since the sections are commonly placed continuously without joints or provisions for uneven settlement. Foundations that present drainage problems should be treated with filter material and weep holes as specified.

Shaping Earthwork

The surface on which bedding materials or rock riprap is to be placed should be graded to the lines and grades shown on the drawings. The subgrade should be checked for loose material or soft areas prior to placing the protective materials. Excavations made adjacent to structures require caution to prevent damage to the structures.

Placing Rock

The riprap should be placed in the manner specified. Hand-placed riprap requires an excessive amount of labor and for this reason is not commonly used on small structures. Machine-placed riprap requires hand labor only as necessary to prevent damage to structures and to produce the thickness or surface finish required. This is the common installation procedure. Placing equipment may include front-end loaders, clam buckets, dragline buckets or crane-operated skips. The riprap should be placed to the full course thickness in one continuous operation, and by methods that prevent displacement of the bedding or filter materials. The placement of loose riprap should result in a reasonably well graded mass, with sufficient small stone to fill the voids between the large rock.

Placing by dumping from trucks or by spreading with dozers tends to segregate the rock sizes and should not be used for placing unless additional precaution is taken to maintain uniformity of the gradation.

Rock placed for grouted sections should be graded to remove the major portion of the material less than 4 inches in size. The rock should be arranged to eliminate large pockets. Stone should not be decked one above the other to meet thickness requirements. Hand labor should be utilized as required to improve the arrangement and to produce the thickness and surface specified for the work. Prior to placing grout, the rock should be washed using water pressure as required to expose a clean surface.

Placing Grout and Protection

The rock riprap should be kept wet immediately ahead of the placing of the grout. The grout may be placed with crane buckets, chutes, pipes, or other conveyance. The grout should land on a splash plate of wood or steel to prevent movement of the rock. A strip about 10 feet wide should be covered at a time. On slopes, the grouting operations should start at the bottom and proceed upslope. Shovels and stiff bristle push brooms are used to direct the grout and to prevent excessive movement. It may be necessary to place the grout in two courses on steep slopes to control the movement of the grout within the rock voids. The time allowed between the placing of the two courses should permit only partial set of the grout.

It is important that the two courses form a good bond. During the progress of the work, inspection should be made to determine that the grout penetrates the full thickness of the riprap and that the voids are completely filled. The final cleanup and finish should remove excess mortar from the rock surfaces and result in sufficient mortar to fill the voids and be free from runs or ridges.

The freshly-placed grout should be protected from rain, flowing water, and injury caused by movement of workmen or equipment for a period of not less than 24 hours. During hot weather the grouted surface should be protected by wetted surface covering or by spraying with curing compound.

Grout should not be placed if temperatures are expected to reach 32° F. within 5 days after placement, unless adequate protective cover is provided to prevent freezing.

References

1. Soil Conservation Service National Engineering Handbook, Section 19, Construction Inspection.

2. Earth Manual, U. S. Department of Interior, Bureau of Reclamation, Denver, Colorado.

3. Soil Primer, Portland Cement Association, 33 West Grand Avenue, Chicago, Illinois 60610.

4. Design and Control of Concrete Mixtures, Portland Cement Association, 33 West Grand Avenue, Chicago, Illinois 60610.

☆ U.S. GOVERNMENT PRINTING OFFICE:1992-626-554/60723

United States Department of Agriculture

NRCS

Natural Resources Conservation Service
210 Walnut Street, Room 693
Des Moines, IA 50309-2180

March 17, 2008

ENGINEERING FIELD HANDBOOK (NEH Part 650)
IA210-ENG-AMENDMENT IA51, CHAPTER 17

PURPOSE: This notice transmits pages IA17-53(1-9) dated March 2008.

Effective Date: This Amendment is effective upon receipt.

Filing Instructions: The following pages should be filed in the Engineering Field Handbook as indicated below:

Remove Pages

IA17-54(11.1-11.12)	dated September 1987

Insert Pages

IA17-53(1-9)	dated March 2008

This amendment provides an updated list of pre-approved Agricultural Waste Storage Structures for use in Iowa.

/s/Al Garner
Acting State Conservationist

Attachment

F
EN2
DSC
SCE's Central Region

An Equal Opportunity Provider and Employer

AGRICULTURAL WASTE[1] STORAGE STRUCTURES

APPROVED STANDARD PLANS

General

"Pre-engineered" waste storage structures or components are only a portion of a waste management system construction plan. The remainder of the construction plan including the location map, site layout, soils data, pertinent elevations, manure transfer, and any other needed components, practices, or details must be assembled. The final construction plan must be approved by a person with the appropriate NRCS engineering job approval authority or signed and sealed by a Professional Engineer licensed to practice in the State of Iowa.

Approved Pre-Engineered Agricultural Waste Storage Structures

The following pages provide information about pre-engineered agricultural waste storage structures that are approved for use in Iowa.

It is the engineer's responsibility to verify the following when using the structures on the list:

1. The site design and capacity requirements proposed by the engineer and/or supplier meets current Iowa NRCS practice standards and statements of work.
2. The specific size/drawing/condition that is being used meets the limitations shown for each product on the following pages.
3. The assumptions for the design are met at the site. For example, actual geotechnical loadings must be determined and documented for each site.
4. The construction is completed in a manner consistent with the design and installation requirements of the specific product.

Note: Approved standard designs/drawings originating in other states and not shown on this list may be used if a design review verifies that the design/drawings meet Iowa's NRCS practice standards. Any variation from a standard plan on this list to its design assumptions requires approval of the State Conservation Engineer.

[1]**Agricultural waste** is defined in the Agricultural Waste Management Field Handbook as waste normally associated with the production and processing of food and fiber on farms, feedlots, ranches, ranges, and forests which may include animal manure, crop and food processing residues, agricultural chemicals, and animal carcasses.

AMERICAN STRUCTURES, INC.
RELOCATION OF A.O. SMITH HARVESTORE "SLURRYSTORE" STRUCTURES

Contractor (Fabricator)	American Structures, Inc. P.O. Box 409 Menomonie, WI 54751 (715) 235-4225
Description	Metal above ground storage tank. Shell consists of used A.O. Smith Harvestore "Slurrystore" glass fused to steel sheets that are bolted together. Footing walls and floor are reinforced concrete. Cathodic protection is provided by zinc anodes electrically connected to the shell, the floor, and the footing reinforcement.
Designers	Stainless Steel Starter Ring: Steven Poethke, P.E., Cooper Engineering Co., Inc., Rice Lake, WI Cathodic Protection: Ralph W. Stephens, P.E. , Cathodic Protection Services, Houston, TX Certification to present Standard 313: Timothy J. Auth, P.E., Auth Consulting Associates Menomonie, WI
Drawings	American Structures Inc., developed a specification titled "Relocation and Rebuilding Specification for Liquid Manure Storage Tanks", revised May 2001. A copy may be obtained from the fabricator. Drawings and details are contained within this document. This specification covers the relocation of the following A.O. Smith Harvestore products:

Series	Diameter	Drawing No.
50A & 50B	25'	253969
	42'	253970
	62'	253971
	81'	253972
	101'	253973
90	42'	2-261283
	62'	2-261284
	81'	2-261285
	101'	2-261286

Assumptions	The following is a partial list of assumptions from the specifications noted above: • The reconstructed unit is the same diameter and height as the original installation. • All parts previously set in concrete are replaced with new parts, equivalent to original equipment. • All hardware required for tank assembly will be new and equivalent in size and strength to original equipment. • The agitation and unloading system enters the structure through the floor slab. • A new cathodic protection system will be installed. • Concrete compressive strength will be 4,000 psi. • Reinforcing bars will be Grade 60. • The starter ring is stainless steel, Type 304 with 0% cold reduction strength values of Fy = 40,000 psi and Fu = 90,000 psi.
Limitations	• Pre-approval is subject to the structure being constructed following the approved specification booklet and the following limitations. This is to be verified by American Structures, Inc., in the form of a letter to the customer. • Floor slab reinforcement shall meet the requirements of Iowa Natural Resources Conservation Service (NRCS) Conservation Standard 313, Waste Storage Facility, for applications where liquid-tightness is required. Wire mesh shall not be used in the floor. • Hydrophilic waterstops shall be those approved for use in waste storage facilities as listed in the Hydrophilic Waterstop section of Chapter 17 of the EFH.
Application	Iowa NRCS Practice Standard 313, Waste Storage Facility
Concurrence	An independent review of the structure was performed by Auth Consulting Associates. They determined the design met the structural design requirements of NRCS Standard 313. The State Conservation Engineer in Wisconsin accepted the independent engineering review and revisions to the installation manual for compliance with Wisconsin NRCS Conservation Standard 313. September 3, 1996. The state engineer in Wisconsin approved the specification booklet. This approval is adopted by the state engineer in Minnesota. **The State Conservation Engineer in Iowa approves the use of these models.**

ENGINEERED STORAGE PRODUCTS COMPANY (A.O. SMITH HARVESTOR PRODUCTS, INC.)	
Designer (Fabricator)	A.O. Smith Engineered Storage Products Company 345 Harvestore Drive DeKalb, IL 60115 (815) 756-1551
Description	Metal above ground storage tank. Shell consists of glass fused to steel sheets that are bolted together. Footing walls and floor are reinforced concrete. Cathodic protection is provided by zinc anodes electrically connected to the shell and the floor and footing reinforcement.
Drawings	The construction drawings are proprietary and not for distribution. The installation manual titled "Slurrystore Structure Construction Manual", copyright 1999 is to be available from the fabrication crew on-site. This manual covers all the 90-Series and 96-Series Structures.
Models	Each structure is furnished with a name plate which identifies the model number, structure size (diameter and height), and a serial number.
Sizes	See following tables.
Materials	The structure shell consists of glass fused to steel sheets that are bolted together. Footing walls and floor are 3,500 psi concrete in accordance with Wisconsin Construction Specification 4, Concrete, and reinforced with Grade 60 steel bars. Cathodic protection is required and is provided by zinc anodes electrically connected to the shell sheets and the floor and footing reinforcement. Foundation sheets contain a two-part continuous seal. The upper sealant is a gray seal strip. Directly below is a bentonite seal strip. This bentonite strip may also be used for sealing pipe penetrations through the concrete floor. The seal strip materials are <u>not</u> to be applied to the sheets or pipe penetrations at temperatures below 20ºF.
Assumptions	The shell design assumes above ground application only (no backfill). Footing strength design is based on a minimum 3,000 psi concrete strength. The final concrete floor slab reinforcement will be determined by the installer based on the tank diameter to be constructed. Most slabs will be reinforced to allow a monolithic pour.
Limitations	Pre-approval is subject to the structure being constructed following the approved drawings and specifications and the following limitation.
Application	Iowa NRCS Practice Standard 313, Waste Storage Facility
Concurrence	The State Conservation Engineer in Illinois has concurred in an independent review performed by a consultant that the structural design is in accordance to NRCS Standard 313. **The State Conservation Engineer in Iowa approves the use of these models.**

ENGINEERED STORAGE PRODUCTS COMPANY
(A.O. SMITH HARVESTOR PRODUCTS, INC.)

Slurrystore Model Number	Structure I.D.	Structure Height
	ft-in	ft-in
90A-4214	41’-11 9/16”	14’-2 11/16”
90A-4219	41’-11 9/16”	18’-9 11/16”
90A-4223	41’-11 9/16”	23’-4 11/16”
90A-4228	41’-11 9/16”	27’-11 5/8”
90A-6214	61’-6 ½”	14’-2 11/16”
90A-6219	61’-6 ½”	18’-9 11/16”
90A-6223	61’-6 ½”	23’-4 11/16”
90A-6228	61’-6 ½”	27’-11 5/8”
7009	69’-11 1/8”	9’-7 11/16”
7014	69’-11 1/8”	14’-2 11/16”
7018	69’-11 1/8”	18’-9 11/16”
7023	69’-11 1/8”	23’-4 11/16”
90A-8114	81’-1 ½”	14’-2 11/16”
90A-8119	81’-1 ½”	18’-9 11/16”
90A-8123	81’-1 ½”	23’-4 11/16”
90A-8128	81’-1 ½”	27’-11 5/8”
90A-10114	100’-8 ½”	14’-2 11/16”
90A-10119	100’-8 ½”	18’-9 11/16”
90A-10123	100’-8 ½”	23’-4 11/16”
90A-10128	100’-8 ½”	27’-11 5/8”
90A-12010	120’-3 ½”	9’-7 11/16”
90A-12014	120’-3 ½”	14’-2 11/16”
90A-12019	120’-3 ½”	18’-9 11/16”
90A-12023	120’-3 ½”	23’-4 11/16”
90A-12028	120’-3 ½”	27’-11 5/8”

Slurrystore Model Number	Structure I.D.	Structure Height
	ft-in	ft-in
96A-5010	50’-4 13/16”	9’-7 11/16”
96A-5014	50’-4 13/16”	9’-7 11/16”
96A-5019	50’-4 13/16”	9’-7 11/16”
96A-5910	58’-9 11/16”	9’-7 11/16”
96A-5914	58’-9 11/16”	9’-7 11/16”
96A-5919	58’-9 11/16”	9’-7 11/16”
96A-7010	70’-0”	9’-7 11/16”
96A-7014	70’-0”	9’-7 11/16”
96A-7019	70’-0”	9’-7 11/16”
96A-7810	78’-4 7/8”	9’-7 11/16”
96A-7814	78’-4 7/8”	9’-7 11/16”
96A-7819	78’-4 7/8”	9’-7 11/16”
96A-9510	95’-2 ½”	9’-7 11/16”
96A-9514	95’-2 ½”	9’-7 11/16”
96A-9519	95’-2 ½”	9’-7 11/16”
96A-11210	112’-0 1/8”	9’-7 11/16”
96A-11214	112’-0 1/8”	9’-7 11/16”
96A-11219	112’-0 1/8”	9’-7 11/16”
96A-12310	123’-2 9/16”	9’-7 11/16”
96A-12314	123’-2 9/16”	9’-7 11/16”
96A-12319	123’-2 9/16”	9’-7 11/16”
96A-14010	140’-0 3/16”	9’-7 11/16”
96A-14014	140’-0 3/16”	9’-7 11/16”
96A-14019	140’-0 3/16”	9’-7 11/16”

HUFFCUTT CONCRETE

Owner (Fabricator)	Huffcutt Concrete 737 Herbert Street Chippewa Falls, WI 54729 (715) 723-7446
Designer	Gary K. Munkelt, P.E., Gary K. Munkelt & Associates, Souderton, PA
Description	Precast concrete T-Panels for manure storage.
Drawings	Gary K. Munkelt and Associates prepared a design, drawings, and construction manual for precast concrete T-panels 8'-6", 10-6", and 12'-6" in height. The design and drawing documents show a latest revision date of May 11, 2004. The construction manual is dated March 2003. The design for all three panel heights were sealed and signed by Gary K. Munkelt, P.E., and dated May 13, 2004.
Materials	The structure is precast concrete, 5,000 psi, reinforced with Grade 40 steel and 65,000 psi welded wire fabric. The floor slab is 3,500 psi concrete. The manure panels are bolted together with two layers of 3/4" x 1" Conseal CS-231 (or equivalent), controlled expansion sealant, and placed between the units. Conseal CS-1500, elastomeric sealant (or equivalent) is applied to the inside and outside joint surface. A 12-inch wide Conseal CS-231 (or equivalent) will be installed at toe of each panel and extended 6 inches over the anchor bolt prior to pouring the concrete over the panel base. Two 5-foot wide closure panels are used to complete the structure perimeter. A waterstop and horizontal reinforcing bars are cast into the closure panels and remain exposed to facilitate the closure concrete pour. Vertical reinforcement is added to match the adjoining precast panel reinforcement. The infill concrete is to be 4,500 psi.
Assumptions	The weight of the soil used in the design was 110 psf. A lateral earth pressure is 85 psf/ft of depth was assumed. No concentrated loads due to machinery are allowed within 5 feet of the wall. A pumping dock design and access ramp details are included with the design submittal. The concrete strength used in this design is 4,000 psi. Pumping dock options include precast and poured in place construction details. This information is contained in the design submittal only and not in the construction manual. The maximum filling capacity assumed in the panel design was 1 foot below the panel top. In addition, the floor slab is poured over the panel base. This further reduces the available storage depth in the unit 11 inches. Therefore, the total depth available for manure storage computation is 1.9 feet less than the total panel height (see table). Minimum and maximum soil backfill heights used in the design are shown in the table below:

Panel Height	Minimum Backfill (ft)*	Maximum Backfill (ft)*	Available Manure Storage Depth (ft)
8'-6"	1.5	6.5	6.6
10'-6"	1.5	7.5	8.6
12'-6"	1.5	10.5	10.6

***** Measured from the bottom of the panel base.

Application	Iowa NRCS Practice Standard 313, Waste Storage Facility
Review & Acceptance	A review of the structural design submitted by the consulting engineer was performed by NRCS staff at the National Design Center in Fort Worth, Texas. The State Conservation Engineer in Wisconsin accepts that the design submitted meets the structural requirements of NRCS Standard 313. Conditions of Wisconsin Approval: Huffcutt Concrete's design and installation manual requires that the wall panels and floor be placed on a stone or stone and sand base material. Soils under the base material must meet Wisconsin NRCS Standard 313 Table 1 or Table 2. Soils that are imported to satisfy Table 2 must be extended 3 feet beyond the wall panel base. Soils placed against the panel sides must meet Standard 313 Table 1, Table 2, or Table 5 (Concrete Composite). **The State Conservation Engineer in Iowa adopts the structural approval by the State Engineer in Wisconsin and approves the structure for use in Iowa with the above limitations.**

MIDWEST PLAN SERVICE CIRCULAR-SITE CAST CONCRETE WASTE STORAGE STRUCTURES	
Designer	Midwest Plan Service Agricultural Engineering Department Iowa State University Ames. IA 50011 (515) 294-4337
Drawings	TR-9 'Circular Concrete Manure Tanks' dated November 1983, Revised 1999.
Sizes	Heights of 8, 10, 12, 14 ft. and 30, 60, 90, 120 ft. diameters. Wall thicknesses vary from 6 inches on the smaller tanks to 12 inches on the larger.
Materials	The circular structure consists of site cast Class 4000 psi concrete with Grade 60 steel.
Assumptions	The drawings state an allowable bearing capacity of 1 ksf for footings on the 8 and 10 ft. deep tanks, and 1.5 ksf for the 12 and 14 ft. deep tanks. The NNTC review analyzed the designs utilizing the stiffness methods published in PCA's "Circular Concrete Tanks Without Pre-stressing" for a hinged base connection and tank full, no backfill condition. The tanks are structurally adequate for this assumed condition and are also adequate for a full non-uniform backfill, tank empty condition.
Limitations	The drawings do not show any minimum backfill which would be necessary in cold areas to provide adequate frost depth to the bottom of the footings. The drawings do not show any drainage which would be necessary in areas below the seasonal groundwater table to relieve uplift pressures under the nonstructural floor slab.
Application	Iowa NRCS Practice Standard 313, Waste Storage Facility
Review & Acceptance	Plans have been reviewed in detail by NNTC for compliance with structural aspects of National Conservation Practice Standard 313-80. Design data is on file at the NNTC. Reviews were completed in June 1989. The Head of the NNTC Engineering Staff concurs in the use of these detailed drawings. **The State Conservation Engineer in Iowa approves the use of this tank.**

WIESER PAN-L BILT MANURE STORAGE FACILITY	
Owner (Manufacturer)	Wieser Concrete Products, Inc. W3716 U.S. Highway 10 Maiden Rock, WI 54750 (715) 647-2311 (800) 325-8456
Designers	Original Designer: Bernard J. Jahn, P.E., Corcoran, MN Additional Features Designer: Michael J. Malson, P.E., Mount Prospect, IL Latest Standard 313, Criteria Designer: Greg A. Jewell, P.E., Spring Green, WI
Description	Rectangular, covered, in-ground, reinforced concrete tank comprised of precast wall panels keyed into a cast in-place floor slab. Precast cover panels and columns. Water tightness provided by compressed mastic strips between wall panels and grouting wall panels into floor slab key.
Drawings	The construction drawings (43 pages) are in the document titled INSTALLATION MANUAL, PAN-L-BILT MANURE STORAGE FACILITY, April 9, 2001. The installation manual is signed and sealed by Joseph H. Marter, P.E. **Page 4 of the installation manual has a revised date of January 24, 2005.** • Wall panels are 8 or 12 feet high precast ribbed panels with 5,000 psi concrete and Grade 60 steel. • The cover slats and supporting beams and columns are precast with 5,000 psi concrete and Grade 60 steel. • Wall panels are bolted together with 5/8 inch bolts and sealed with Con-Seal Butyl Resin Concrete Sealant. • Floor slab and footings are site cast with a minimum 3,500 psi concrete and Grade 60 steel. • Site soils and backfill requirements and options are listed in the Installation Manual.
Assumptions	The wall panels are designed for a full backfill, tank empty condition, and a tank full condition with backfill one foot below the top of the wall panel. Equivalent fluid pressures are 65 psf for the manure and 60 psf and 80 psf for the soil backfill. An equipment surcharge loading equal to two feet of backfill soil (120 or 170 psf) is provided. A complete listing of loadings is contained on page 2 of the Installation Manual Drawings. The cover slats, free stall panels, drive through panels, or pump out covers are required to support the wall panels. Slats or cover panels and cover opening options are contained in the manual. See "Review and Acceptance" section for additional site soil requirements.
Limitations	Pre-approval is subject to the structure being constructed following the approved drawings and specifications and following limitation. This is to be verified by Wieser Concrete in the form of a letter to the customer. Type 1 and Type 2 floors are not approved. The Type 3 floor is approved.
Application	Iowa NRCS Practice Standard 313, Waste Storage Facility
Review & Acceptance	The State Conservation Engineer in Wisconsin accepted the independent engineering review and revisions to the installation manual for compliance with Wisconsin NRCS Standard 313. Condition of Wisconsin Approval: To meet the requirements of NRCS Standard 313 the structure must be installed on sites with soils that meet the criteria in Table 1 of Standard 313, or placed on and backfilled with soils that meet the criteria in Table 2 or Table 5 (Concrete Composite) of Standard 313. April 6, 2000, the State Engineer in Minnesota adopts the structural approval by the State Engineer in Wisconsin (March 20, 2000) and approves the structure for use in Minnesota with the above limitations. **The State Conservation Engineer in Iowa adopts the structural approval by the State Engineer in Wisconsin and approves the structure for use in Iowa with the above limitations.**

WIESER L-PANEL MANURE STORAGE FACILITY	
Owner (Manufacturer)	Wieser Concrete Products, Inc. W3716 U.S. Highway 10 Maiden Rock, WI 54750 (715) 647-2311 (800) 325-8456
Designers	Original designer: (8'-6"), Reigstad & Associates, St. Paul, MN Latest Standard 313 criteria designer: (8'-6" and 12"), Greg A. Jewell, P.E., Spring Green, WI
Drawings	The construction drawings (26 pages) are in the document titled INSTALLATION MANUAL, L-PANEL MANURE STORAGE FACILITY, January 21, 2003, revised August 24, 2004. The installation manual is signed and sealed by Mark A. Wieser, P.E.
Materials	• Wall panels are 8'-6" or 12' high precast ribbed panels with 5,000 psi concrete and Grade 60 steel. • Wall panels are bolted together with 5/8 inch bolts and sealed with Con-Seal Butyl Resin Sealant (CS 102 or 202). • Floor slab and footings are site cast with a minimum 3,500 psi concrete and reinforced per Floor Type utilized. • Wall panels are secured to the floor slab with anchor bolts of various diameters. • Site soils and backfill requirements and options are listed in the Installation Manual.
Assumptions	The wall panels are designed for a full backfill, tank empty condition, and a tank full condition with backfill 4 feet below the top of the wall for both the 8'6" and 12' panels. Equivalent fluid pressures are 65 psf for the manure and 65 psf for the soil backfill. An equipment surcharge loading equal to two feet of backfill soil (130 psf) is provided. A complete listing of loadings is contained on page 2 of the Installation Manual drawings. See "Review and Acceptance" for additional site soil requirements.
Application	Iowa NRCS Practice Standard 313, Waste Storage Facility
Review & Acceptance	An independent review of the 8'-6" structure design was performed by Jewell & Associates of Spring Green, WI. They determined the design required only minor revisions to meet the structural design requirements of NRCS Standard 313. The State Conservation Engineer in Wisconsin accepted the independent engineering review of the 8'-6" panel design and revisions to the installation manual for compliance with Wisconsin NRCS Standard 313. NRCS engineering staff performed a review of the 12' structure design performed by Jewell & Associates and have determined it to be in compliance with Standard 313. Condition of Wisconsin Approval: To meet the requirement of Wisconsin NRCS Standard 313, the structure must be installed on sites with soils that meet the criteria in Table 1 of Standard 313, or placed on and backfilled with soils that meet the criteria in Table 2 or Table 5 (Concrete Composite) of Standard 313. **The State Conservation Engineer in Iowa adopts the structural approval by the State Engineer in Wisconsin and approves the structure for use in Iowa with the above limitations.**

NATURAL RESOURCES CONSERVATION SERVICE
CURRENT PLANS

TR-9 Circular Concrete Manure Tank	
Description	Cast in-place, open top, circular, reinforced concrete tank. Design reviewed and plans completed by NRCS, Des Moines, Iowa, design team based on Midwest Plan Service publication TR-9, "Circular Concrete Manure Tanks Using a Hinged-Base, Free-Top Design."
Drawings	Iowa NRCS standard drawing dated 5/99. CAD drawings available on Iowa NRCS home page www.ia.nrcs.usda.gov under Technical Resources, Iowa Engineering, and then CADD Drawings.
Sizes	Diameters of 30 ft to 120 ft in 15 ft increments. Heights of 8, 10, 12, and 14 ft.
Assumptions	Soil backfill loads: 85 psf/ft. EFP with no surcharge or 60 psf/ft. EFP with 120 psf lateral surcharge. No minimum backfill. Maximum backfill is 6" from top of tank. Backfill shall be brought up uniformly around the tank. The maximum difference in the finished backfill elevations around the tank shall be 3 ft. Hydrophilic or nonmetallic waterstops or sand-blasted surfaces used to provide water tightness in all joints.

Minnesota 8 ft. Deep Concrete Tank	
Description	Cast in-place, rectangular, reinforced concrete tank with beams and columns. Tank can be open top or covered. Design based on Midwest Plan Service Publication 36, "Concrete Manure Storages Handbook."
Drawings	Two sheets, dated 05/02. CAD drawings available on Minnesota NRCS home page www.mn.nrcs.usda.gov under Technical Resources Information, Engineering, and then CADD Drawings.
Sizes	Infinite length and width. Depth of 8 ft.
Assumptions	Assumptions are listed on the drawings. Wall soil loadings is 85 psf/ft based on backfill with low to medium plasticity silts and clays lacking in sand and gravel, CL or ML. Wall loading also assumes a 100 psf vertical surcharge on the backfill.