United States Department of Agriculture

NRCS Natural Resources Conservation Service

Biology Technical Note #2

Indiana - November 2009 (ver. 1.0)

Raptor Perches

Background

High tree mortality rates on some restoration projects in Indiana may be due to vole and mice damage. These rodents damage, and often kill, young shrubs and trees by stripping the bark from the stems and roots of the plants. Rodents serve as a primary food source for many raptors (birds of prey). While the impact of artificial perches on rodent populations is not well documented, artificial perches make it easier for raptors to spot prey. A recent study on predator control of rodent pests indicated that landowners reported the use of raptor perches as an effective rodent control. They noticed a decrease in both vole damage and their need for rodenticides (poison-treated baits). The most likely raptors in Indiana to use an artificial perch, as detailed in the following pages, include Great Horned Owls, Snowy Owls, Red-tailed Hawks, Red-shouldered Hawks, Rough-legged Hawks, and American Kestrels.

Raptor Perch Benefits

1. Artificial perches can improve raptor efficiency, especially in areas where natural perches have been removed, by providing strategic vantage points and allowing raptors to use less energy when hunting.
2. Decreases the need for rodenticides, which have been used to control mice and meadow voles. These chemicals are hazardous and can affect non-target organisms. Rodenticides may also be restricted and require a license.
3. Installation of raptor perches may help keep rodent populations low once they have been reduced through alternative techniques.
4. Raptor perches can be erected any time of year. Perches can be especially valuable in the winter and early spring before the primary rodent-breeding season.

Points to Consider

1. A spacing of at least 50 yards is recommended if more than one perch is planned.
2. Raptors are opportunistic feeders, and may prey on non-target species such as quail and songbirds. When wetlands are near, raptors may feed on aquatic species such as frogs, snakes, and small ducks. Raptor perches will act as an "edge" near grasslands, reducing its habitat value for some species. Perches should be installed at least 300 feet from wetland and grassland habitats.
3. Nest boxes can also be an effective method to increase the population of cavity-nesting raptors. See the Minnesota Department of Natural Resources publication Woodworking for Wildlife for additional information.

REFERENCES

Artificial Perches for Raptors, http://www.rain.org/~sals/perches.html

Raptor Perches, Bio-Diversity Products, 10112 E. Woodbridge Rd., Acampo, CA 95220-9752
http://members.tripod.com/Tommy51/perch.html

Western Integrated Pest Management Center (WIPMC), Cooperative State Research, Education and Extension Service, United States Department of Agriculture
http://www.wrpmc.ucdavis.edu/CenterProjects/Hastings%20Final%20Report%20%20Oct%202008.pdf

Helping People Help the Land

USDA is an equal opportunity provider and employer.

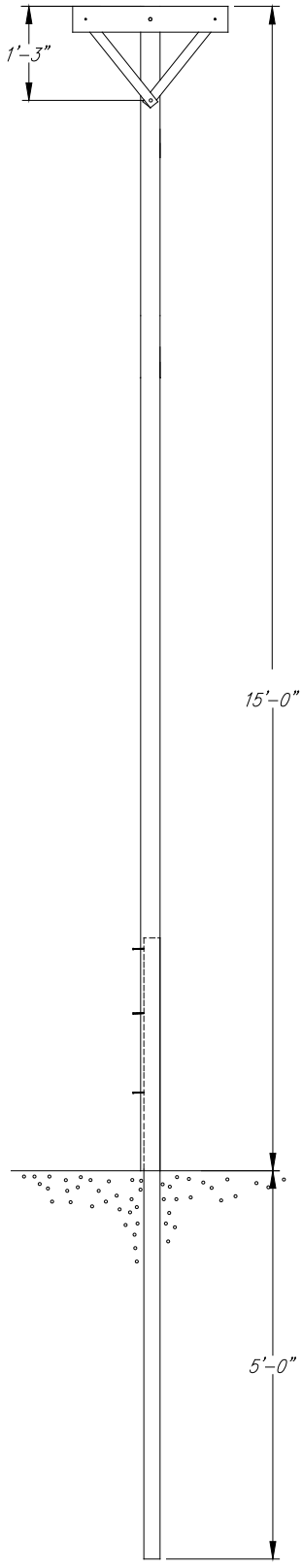

MATERIALS

ONE 15' HOLLOW METAL PIPE 3" DIAMETER (EX: ELECTRICAL CONDUIT OR GALVANIZED STEEL PIPE) IMPORTANT: USE LIKE METALS FOR BOTH PIPE AND SUPPORT FLATS TO PREVENT CORROSION.

ONE 8' FENCE POST

1 – 2"X4"X24" CROSS PIECE TREATED BOARD

2 – $\frac{1}{8}$"X$1\frac{1}{2}$"X16" METAL SUPPORT FLATS

3 – $2\frac{1}{2}$" X $\frac{3}{8}$" BOLTS AND NUTS

2 – 2" X $\frac{3}{8}$" BOLTS AND NUTS

1 – 4" BOLT AND NUT

1 – 5" BOLT AND NUT*

*A 6" INCH BOLT SHOULD BE USED ON CROSS PIECE AT CENTER IF INTENDING TO ATTACH A KESTREL BOX TO BACK OF PIPE.

PREPARATION

DRILL $\frac{1}{2}$" HOLE IN HOLLOW METAL POLE AT 2" FROM TOP OF POLE THROUGH BOTH FRONT AND BACK OF POLE. PRE-DRILL HOLE THROUGH FRONT AND BACK OF POLE AT APPROXIMATELY 15" FROM TOP FOR SECURING METAL SUPPORT FLATS. SEE DIAGRAM AT RIGHT.

PRE-DRILL $\frac{1}{2}$" DIAMETER HOLES AT 12", 24", AND 34" FROM BASE OF POLE. ARC WELD NUTS MATCHING $2\frac{1}{2}$"X$\frac{3}{8}$" BOLTS TO OUTSIDE OF 3 BASE HOLES.

PRE-DRILL $\frac{1}{2}$" HOLES IN 2"X4" CROSS PIECE, AT CENTER. PRE-DRILL $\frac{3}{8}$" HOLES AT 2" FROM ENDS.

TAN/BROWN RUST PREVENTION PAINT SHALL BE APPLIED TO EXPOSED METAL SURFACES.

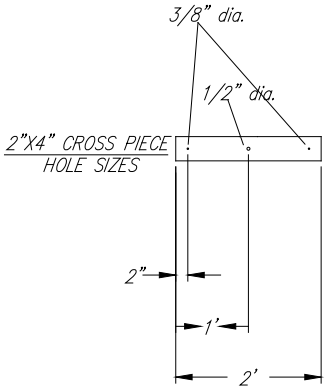

1/2" DIAMETER PRE-DRILLED HOLES

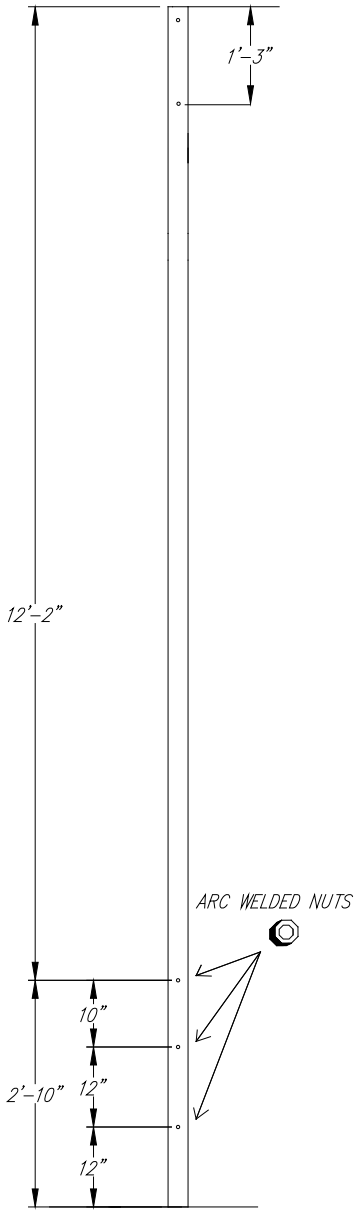

Drawing No.	File No.	NRCS Natural Resources Conservation Service United States Department of Agriculture	Indiana Biology Technical Note RAPTOR PERCH (Sheet 2 of 4)	Date Designed P. BATY 7/03 Revised B. CLARIZIA 4/09 Checked Approved	Sheet of

INSTRUCTIONS:

STEP 1: COMPLETE ALL PREPARATION STEPS.

STEP 2: DRIVE FENCE POST 5' INTO GROUND AT DESIRED LOCATION.

STEP 3: TAKING THE HOLLOW METAL PIPE, LOOSELY BOLT CROSS PIECES AT HOLES, 2" AND 36" FROM TOP. (5" BOLTS)

STEP 4: SECURE ONE END OF SUPPORT PIECE TO THE CORRESPONDING PRE-DRILLED HOLE IN THE CROSS-PIECE. SECURE OTHER END TO THE FRONT OF THE POLE, USING A 4" BOLT. REPEAT FOR THE OTHER SIDE. SUPPORT PIECES WILL OVERLAP. USE BOLTS AND NUTS AS SHOWN.

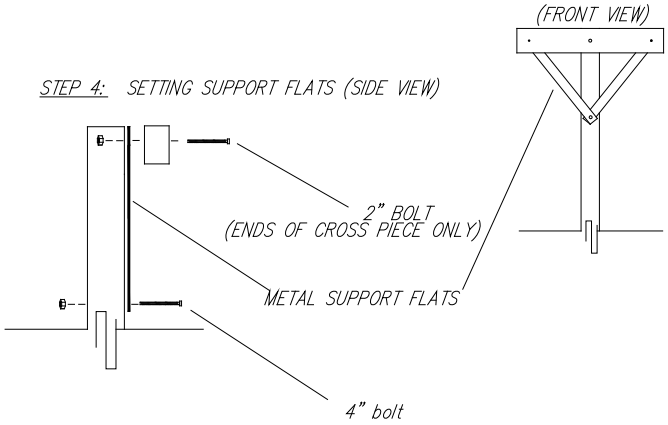

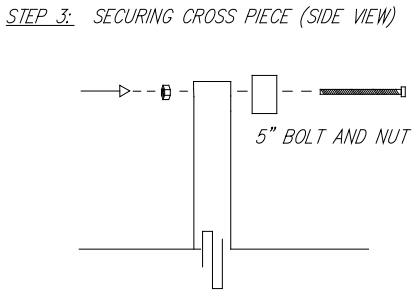

STEP 5: ATTACH KESTREL BOX TO BACK OF POLE AT ONE OF THE PROTRUDING BOLTS. TIGHTEN ALL SCREWS, THEN BOLTS. BOTTOM OF KESTREL BOX MAY BE SECURED BY WRAPPING ROPE/WIRE/CABLE AROUND POLE AND THROUGH PRE-DRILLED HOLE AT BASE OF BOX.

STEP 6: ERECT RAPTOR PERCH BY SLIDING POLE OVER EMBEDDED FENCE POST. SCREW $2\frac{1}{2}$" BOLTS INTO NUTS WELDED NEAR BASE OF POLE AND TIGHTEN.

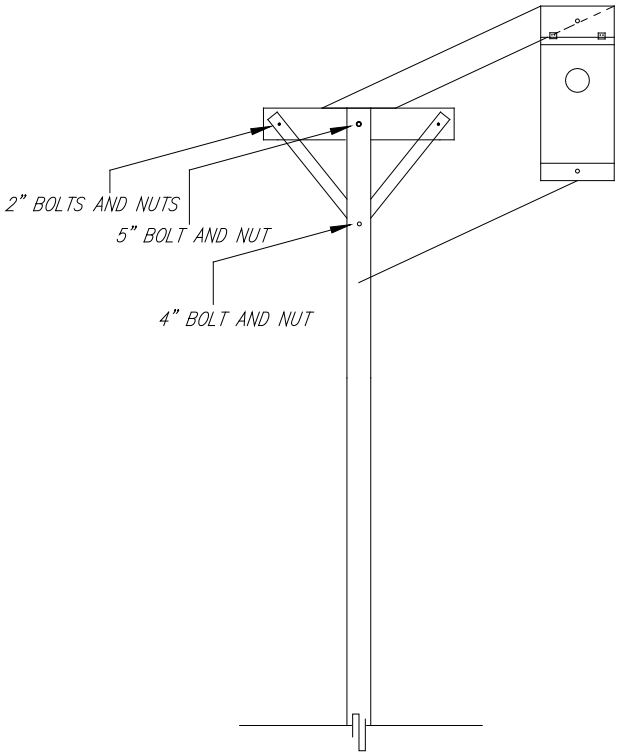

STEP 5: ATTACHING KESTREL BOX TO RAPTOR PERCH

PLACEMENT INSTRUCTIONS:

RAPTOR PERCH SHALL BE ERECTED WITH AXIS RUNNING IN THE EAST AND WEST DIRECTIONS, AND MULTIPLE PERCHES PLACED WITH AT LEAST 50 YARD SPACING.

KESTREL BOX *
(for attachment to Raptor Perch)

LUMBER: ONE 1" X 10" X 8'0" UNTREATED PINE

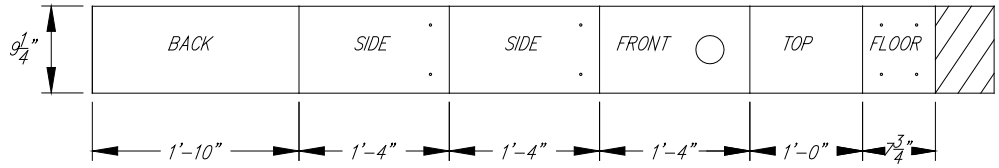

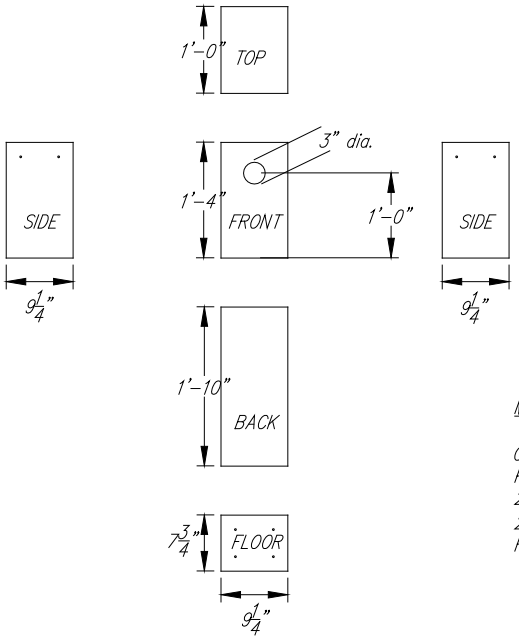

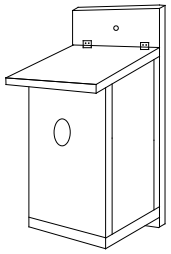

MATERIALS

ONE 1" X 10" X 8'0" UNTREATED PINE BOARD
PAIR OF HINGES
2 SMALL WOOD TACKS
2" OF WIRE
RING SHANK NAILS

ASSEMBLY:

1. CUT BOARD TO THE APPROPRIATE DIMENSIONS, AS GIVEN ABOVE.

2. DRILL TWO 1/4" VENTILATION HOLES IN BOTH SIDE SECTIONS AND FOUR HOLES IN THE FLOOR SECTION.

3. ASSEMBLE FRONT, BACK, SIDES, AND FLOOR USING RING SHANK NAILS.

4. USE HINGES TO ATTACH TOP SECTION. THE WOOD TACKS MAY BE TACKED TO ONE EDGE OF THE TOP PIECE, LEAVING APPROXIMATELY 1/4" PROTRUDING. THE OTHER TACK SHOULD BE SECURED JUST BELOW THE FIRST TACK IN THE SAME MANNER, ON THE ADJACENT SIDE. WRAP THE WIRE AROUND BOTH TACKS, WIRING THE LID CLOSED.

SPECIAL INSTRUCTIONS:

PRE-DRILL 1/2"HOLE AT 2" FROM TOP AND 1/4" HOLE ON BACK SECTION BELOW FLOOR.

ONCE ATTACHED TO THE RAPTOR PERCH, 3" OF WOOD CHIPS SHOULD BE DEPOSITED IN THE BOTTOM OF THE KESTREL BOX.

ATTACH BOX WITH ENTRANCE HOLE FACING EAST TO SOUTH.

*Modified from "Woodworking for Wildlife" Minnesota DNR, 1992

Drawing No. | File No.

NRCS
Natural Resources Conservation Service
United States Department of Agriculture

Indiana Biology Technical Note
RAPTOR PERCH
(Sheet 4 of 4)

		Date
Designed	P. BATY	7/03
Revised	B. CLARIZIA	4/09
Checked		
Approved		

Sheet of