LIVESTOCK FENCE

# FENCE BRACES FOR ALL FENCE TYPES

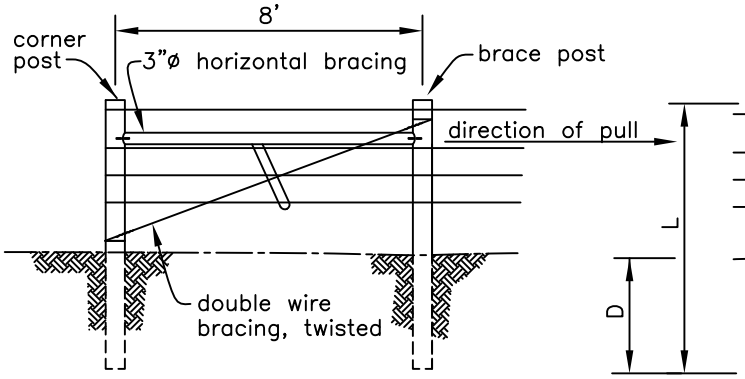


1–SPAN END

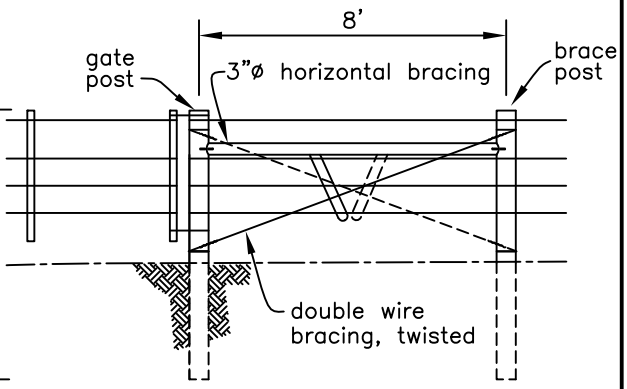


GATE BRACE

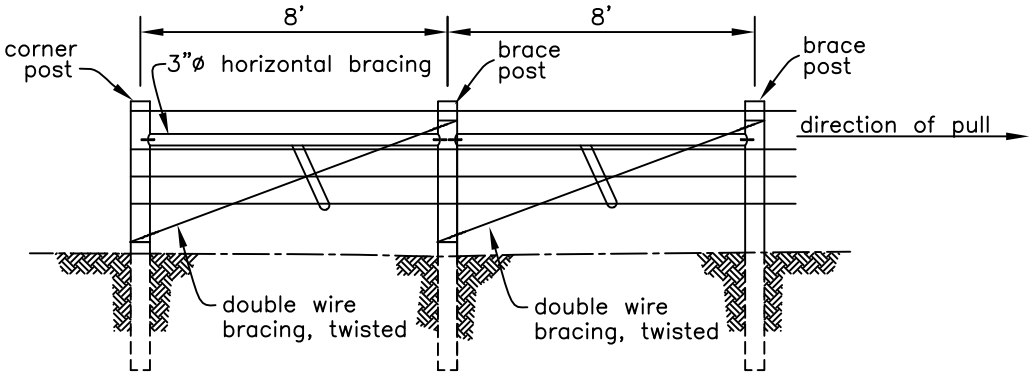


2–SPAN END

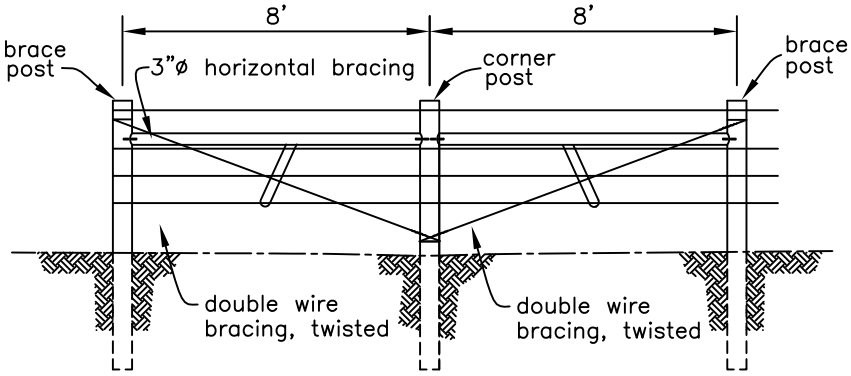


CORNER BRACE

1. Double wrap all bracing.
2. All corner, end, and brace posts to be:
   L = _____ ft. min.
   D = _____ ft. min.
   Dia. = _____ in. min.
3. Spike or pin horizontal braces to posts. Notch as needed.

Drawing not to scale. Standardized drawing must be adapted to the specific site.

NRCS
Natural Resources Conservation Service
United States Department of Agriculture

| | | |
|---|---|---|
| Designed _____ Date | | File Name |
| Drawn Standard | | Drawing Name ME–FNC–FB1 rev. 02/2010 |
| Checked | | |
| Approved | | Sheet of |