LIVESTOCK FENCE

WOVEN WIRE FENCE

Standard _____

High Tensile _____

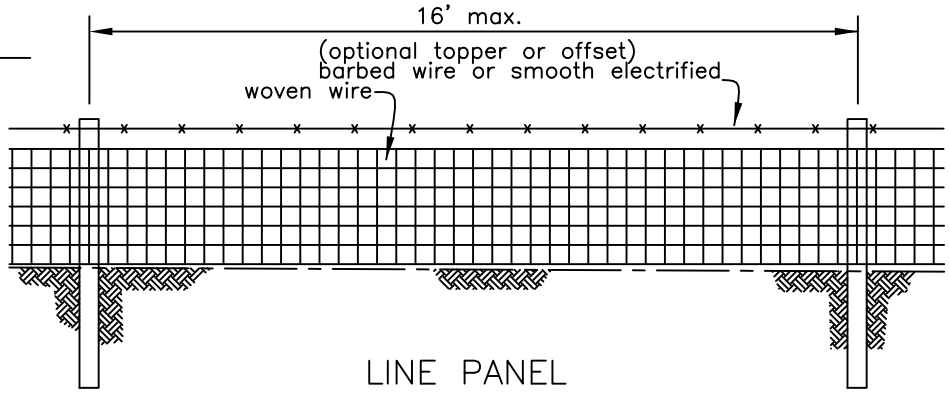

LINE PANEL

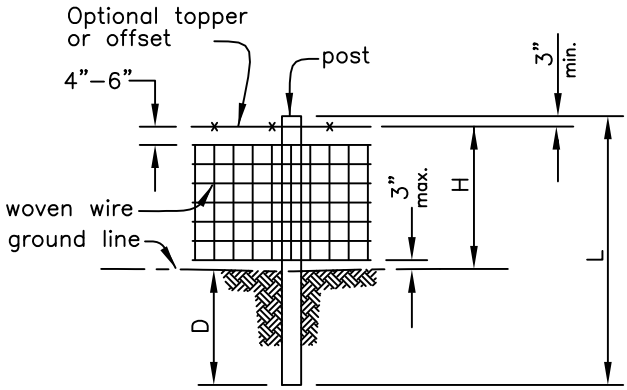

WOVEN WIRE W/ONE BARB DETAIL

WOVEN WIRE

Top and bottom wires shall be 10 gauge or heavier and line and stay wires shall be 12 1/2 gauge or heavier.

There will be a minimum of 6 horizontal wires with a max. of 12 inch spacing between stay wires.

The label shall indicate the wire meets ASTM A–116 or ASTM A–584 standards.

Fence Height H= _____ ft. min

Topper or offset No. _____ wires

LINE

Wood:
L = _____ ft. min.
D = 2 ft. min.
Dia. = 3 in. min.

Steel:
L = _____ ft. min.
D = 2 ft. min.
Wt = 1.3 lbs/ft. min

Existing Trees: Live trees in line with fence at least 5" diameter
Attach red or white ceder or pressure treated 2x4 for nailing surface

CORNER END OR GATE

Wood: Standard
L = _____ ft. min.
D = 3 ft. min.
Dia. = 5 in. min.

Wood: High Tensile
L = _____ ft. min.
D = 4 ft. min.
Dia. = 6 in. min.

SPECIES for all wood: Red or White Ceder, Black Locust, or any Pressure Treated Species

SPECIAL INSTRUCTIONS

_____

_____

_____

Drawing not to scale. Standardized drawing must be adapted to the specific site.

NRCS
Natural Resources Conservation Service
United States Department of Agriculture

Designed _____ Date

Drawn Standard

Checked _____

Approved _____

File Name

Drawing Name
ME–FNC–WWF
rev. 02/2010

Sheet of