United States Department of Agriculture
Natural Resources Conservation Service

Ecological Site Description

Site Type: Rangeland

Site Name: Wetland 12-17" Southern Plains Precipitation Zone,

Site ID: R067XY178WY

Major Land Resource Area: 67 – North Central High Plains

Physiographic Features

This site normally occurs on level to nearly level bottomlands near springs, seeps and sloughs.

Landform: drainageways, oxbows, and stream terraces. **Aspect:** N/A

	Minimum	Maximum
Elevation (feet):	4000	6500
Slope (percent):	0	6
Water Table Depth (inches):	0	18
Flooding:		
Frequency:	occasional	frequent
Duration:	very brief	brief
Ponding:		
Depth (inches):	0	12
Frequency:	frequent	frequent
Duration:	brief	very long
Runoff Class:	negligible	medium

Climatic Features

Annual precipitation ranges from 12-17 inches per year. Wide fluctuations may occur in yearly precipitation and result in more dry years than those with more than normal precipitation. Temperatures show a wide range between summer and winter and between daily maximums and minimums, due to the high elevation and dry air, which permits rapid incoming and outgoing radiation. Cold air outbreaks from Canada in winter move rapidly from northwest to southeast and account for extreme minimum temperatures. Chinook winds may occur in winter and bring rapid rises in temperature. Extreme storms may occur during the winter, but most severely affect ranch operations during late winter and spring.

Wind speed averages about 8 mph, ranging from 10 mph during the spring to 7 mph during late summer. Daytime winds are generally stronger than nighttime and occasional strong storms may bring brief periods of high winds with gusts to more than 75 mph.

Growth of native cool-season plants begins about April 1 and continues to about July 1. Native warm-season plants begin growth about May 15 and continue to about August 15. Green up of cool season plants may occur in September and October of most years.

The following information is from the "Lusk 2SW" climate station.

	Minimum	Maximum
Frost-free period (days):	74	148
Freeze-free period (days):	101	181
Mean Annual Precipitation (inches):	12	17

Mean annual precipitation: 15.71 inches
Mean annual air temperature: 45.2 °F (31.0°F Avg. Min. – 59.3°F Avg. Max.)
For detailed information visit the Natural Resources Conservation Service National Water and Climate Center at http://www.wcc.nrcs.usda.gov/ website. Other climate station(s) representative of this precipitation zone include: "Chugwater, Wheatland 4N, Cheyenne AP and Scottsbluff WSO AP".

Influencing Water Features

Wetland Description:	System	Subsystem	Class	Sub-class
	Palustrine	None	Emergent Wetland	Persistent

Stream Type: C (Rosgen)

Representative Soil Features

This site consists of deep to very deep poorly drained soils formed in alluvium with a water table above the surface for part but not all of the growing season. They are on nearly level to slightly depressed areas with poor surface drainage. In some places the surface layers have a high organic matter content. Layers of the soil most influential to the plant community vary from 3 to 6 inches thick.

Major Soil Series correlated to this site include: Barney, Bigwinder

Other Soil Series in MLRA 67 correlated to this site include: Fluvaquentic Endoaquolls

Parent Material Kind: alluvium
Parent Material Origin: sandstone, shale
Surface Texture: clay, clay loam, loam, silty clay, silty clay loam, silt loam
Surface Texture Modifier: mucky
Subsurface Texture Group: loam
Surface Fragments ≤ 3" (% Cover): 0
Surface Fragments > 3" (%Cover): 0
Subsurface Fragments ≤ 3" (% Volume): 0
Subsurface Fragments > 3" (% Volume): 0

	Minimum	Maximum
Drainage Class:	very poorly drained	somewhat poor
Permeability Class:	slow	moderate
Depth (inches):	20	>60
Electrical Conductivity (mmhos/cm) ≤20":	0	4
Sodium Absorption Ratio ≤20":	0	5
Soil Reaction (1:1 Water) ≤20":	6.6	7.8
Soil Reaction (0.1M CaCl2) ≤20":	NA	NA
Available Water Capacity (inches) ≤30":	2.2	6.6
Calcium Carbonate Equivalent (percent) ≤20":	0	5

Plant Communities

Ecological Dynamics of the Site:

As this site deteriorates, species such as spike sedge and Baltic rush increase. Grasses/grass-likes such as Nebraska sedge, northern reedgrass and bluejoint reedgrass will decrease in frequency and production

The Historic Climax Plant Community (description follows the State and Transition Model Diagram) has been determined by study of rangeland relic areas, or areas protected from excessive disturbance. Trends in plant communities going from heavily grazed areas to lightly grazed areas, seasonal use pastures, and historical accounts have also been used.

The following is a State and Transition Model Diagram that illustrates the common plant communities that can occur on the site and the transitions between these communities. The ecological processes will be discussed in more detail in the plant community narratives following the diagram.

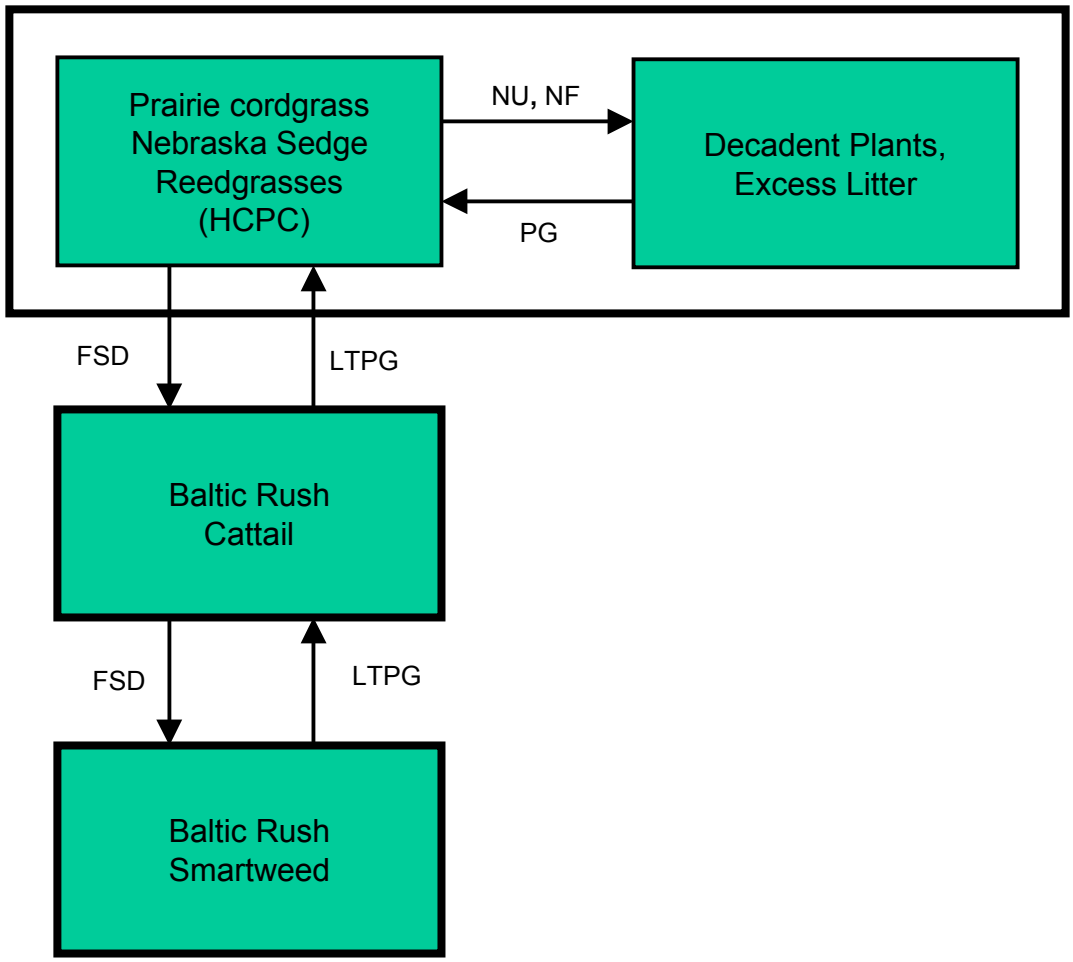

FSD - Frequent and Severe Defoliation of the Cool-season Mid-grasses/grasslikes during the Growing Season
HCPC - Historic Climax Plant Community
LTPG - Long-tem Prescribed Grazing
NU, NF - No Use and No Fire
PG - Prescribed Grazing (proper stocking rates with adequate recovery periods during the growing season)

Plant Community Composition and Group Annual Production

Prairie Cordgrass, Nebraska Sedge, Reedgrasses Plant Community (HCPC)

COMMON NAME/GROUP NAME	SCIENTIFIC NAME	SYMBOL	Annual Production (Normal Year) Total: 5500		
			Group	lbs./acre	% Comp.
GRASSES AND GRASS-LIKES					
GRASSES			**1**	**3025 - 3575**	**55 - 65**
prairie cordgrass	Spartia pectinata	SPPE	1	2200 - 3025	40 - 55
bluejoint reedgrass	Calamagrostis canadensis	CACA4	1	550 - 1375	10 - 25
northern reedgrass	Calamagrostis stricta	CAST13	1	275 - 825	5 - 15
MISCELLANEOUS GRASSES			**2**	**275 - 550**	**5 - 10**
bluegrasses	Poa spp.	POA	2	0 - 275	0 - 5
foxtail barley	Hordeum jubatum	HOJU	2	0 - 275	0 - 5
reed canarygrass	Phalaris arundinacea	PHAR3	2	0 - 275	0 - 5
slender wheatgrass	Elymus trachycaulus	ELTR7	2	0 - 275	0 - 5
other perennial grasses (native)		2GP	2	0 - 275	0 - 5
SEDGES AND RUSHES			**3**	**1100 - 1925**	**20 - 35**
Nebraska sedge	Carex nebraskensis	CANE2	3	550 - 1375	10 - 25
bulrush	Scirpus spp.	SCIRP	3	275 - 550	5 - 10
sedges	Carex spp.	CAREX	3	275 - 550	5 - 10
Baltic rush	Juncus balticus	JUBA	3	0 - 275	0 - 5
rushes	Juncus spp.	JUNCU	3	0 - 275	0 - 5
spikerush	Eleocharis spp.	ELEOC	3	0 - 275	0 - 5
FORBS			**4**	**275 - 550**	**5 - 10**
asters	Aster spp.	ASTER	4	0 - 110	0 - 2
American licorice	Glycyrrhiza lepidota	GLLE3	4	0 - 110	0 - 2
arrowgrass	Triglochin spp.	TRIGL	4	0 - 110	0 - 2
blue-eyed grass	Sisyrinchium spp.	SISYR	4	0 - 110	0 - 2
cattail, broad-leaf	Typha latifolia	TYLA	4	0 - 110	0 - 2
cattail, narrow-leaf	Typha angustifolia	TYAN	4	0 - 110	0 - 2
cinquefoils	Potentilla spp.	POTEN	4	0 - 110	0 - 2
iris	Iris spp.	IRIS	4	0 - 110	0 - 2
milkvetches	Astragalus	ASTRA	4	0 - 110	0 - 2
Pennsylvania smartweed	Polygonum pensylvanicum	POPE2	4	0 - 110	0 - 2
poison hemlock	Conium maculatum	COMA2	4	0 - 110	0 - 2
swamp smartweed	Polygonum hydropiperoides	POHY2	4	0 - 110	0 - 2
water hemlock	Cicuta spp.	CICUT	4	0 - 110	0 - 2
wild onion	Allium textile	ALTE	4	0 - 110	0 - 2
wild strawberry	Fragaria virginiana	FRVI	4	0 - 110	0 - 2
scouringrush	Equisetum spp.	EQUIS	3	0 - 110	0 - 2
other perennial forbs (native)		2FP	4	0 - 275	0 - 5
TREES			**5**	**0 - 550**	**0 - 10**
willows	Salix spp.	SALIX	5	0 - 550	0 - 10

This list of plants and their relative proportions are based on near normal years. Fluctuations in species composition and relative production may change from year to year dependent upon precipitation or other climatic factors.

Plant Community Narratives

Following are the narratives for each of the described plant communities. These plant communities may not represent every possibility, but they probably are the most prevalent and repeatable plant communities. The plant composition tables shown above have been developed from the best available knowledge at the time of this revision. As more data is collected, some of these plant communities may be revised or removed, and new ones may be added. None of these plant communities should necessarily be thought of as "Desired Plant Communities". According to the USDA NRCS National Range and Pasture Handbook, Desired Plant Communities will be determined by the decision-makers and will meet minimum quality criteria established by the NRCS. The main purpose for including any description of a plant community here is to capture the current knowledge and experience at the time of this revision.

Prairie cordgrass, Nebraska sedge, Reedgrasses Plant Community

This plant community is the interpretive plant community and is considered to be the Historic Climax Plant Community (HCPC). This plant community evolved with grazing by large herbivores and is well suited for grazing by domestic livestock. Potential vegetation is about 45-75% grasses, 20-35% sedges and rushes, 5-10% forbs, and 0-10 trees. The major grasses/grass-likes include prairie cordgrass, Nebraska sedge, bluejoint reedgrass, and northern reedgrass. Grasses/grass-likes of lesser importance are Baltic rush and low-growing, unpalatable sedges.

The total annual production (lb./ac., air-dry weight) of this plant community during an average year is:

12-17"P.Z.

	LOW	RV	HIGH
GRASS/GRASSLIKE	4375	4810	5245
FORB	375	415	455
SHRUB	0	0	0
TREE	250	275	300
TOTAL	5000	5500	6000

The following is the growth curve of this plant community expected during a normal year:
Growth curve number:
Growth curve name:
Growth curve description:

JAN	FEB	MAR	APR	MAY	JUN	JUL	AUG	SEP	OCT	NOV	DEC
0	0	0	10	25	35	15	5	5	5	0	0

(monthly percentages of total annual growth)

The plant community is well adapted to the Northern Great Plains climatic conditions. It is a critical plant community providing water and habitat for the surrounding area. The diversity in plant species provides a variety of habitats for wildlife. It is resistant to drought due to a dependable water supply. This is a sustainable plant community (soil stability, watershed function, and biologic integrity).

Transitions or pathways leading to other plant communities are as follows:

- Frequent and Severe Defoliation will convert this plant community to the *Baltic rush/Cattail Plant Community.*

- No Use and No Fire will convert this plant community to the *Decadent Plants, Excess Litter Plant Community.*

Baltic Rush/Cattail Plant Community

This plant community evolved under moderate grazing by domestic livestock. Dominant grasses include cattails, low-growing unpalatable sedges, and Baltic rush. Willows are present near the dryer edges of this plant community.

When compared to the Historical Climax Plant Community, prairie cordgrass, northern reedgrass, bluejoint reedgrass, and Nebraska sedge have decreased. Low-growing unpalatable sedges, Baltic rush, and cattails have increased. The abundant production and proximity to water make this plant community important for livestock and wildlife such as birds, mule deer, and antelope.

The total annual production (air-dry weight) of this plant community is about 3000 pounds per acre, but it can range from about 2000 lbs./acre in unfavorable years to about 4000 lbs./acre in above average years.

The following is the growth curve expected during a normal year:
Growth curve number:
Growth curve name:
Growth curve description:

JAN	FEB	MAR	APR	MAY	JUN	JUL	AUG	SEP	OCT	NOV	DEC
0	0	0	10	25	35	15	5	5	5	0	0

(monthly percentages of total annual growth)

The plant community is stable and protected from excessive erosion. The biotic integrity of this plant community is usually intact. The watershed is usually functioning.

Transitions or pathways leading to other plant communities are as follows:

- Prescribed grazing over the long-term will result in a plant community very similar to the *Historic Climax Plant Community.*
- Frequent and Severe Defoliation will convert this plant community to the *Baltic rush/Smartweed Plant Community.*

Baltic Rush/Smartweed Plant Community

This plant community is the result of long-term frequent and severe defoliation. Baltic rush, smartweed, and cattails dominate this plant community. American licorice has invaded.

The total annual production (air-dry weight) of this plant community is about 1800 pounds per acre, but it can range from about 1200 lbs./acre in unfavorable years to about 2500 lbs./acre in above average years.

The following is the growth curve expected during an average year.
Growth curve number:
Growth curve name:
Growth curve description:

JAN	FEB	MAR	APR	MAY	JUN	JUL	AUG	SEP	OCT	NOV	DEC
0	0	0	10	25	35	15	5	5	5	0	0

(monthly percentages of total annual growth)

Bare ground has increased. The soil is not well protected. Degraded stream banks may erode. The watershed is functioning but may produce excessive runoff. The biotic community is at risk due to invasive plants.

Transitions or pathways leading to other plant communities are as follows:

- Prescribed Grazing over the long-term will return this plant community to near *Historic Climax Plant Community.*

Decadent Plants, Excess Litter Plant Community

This plant community developed under the absence of grazing and fire. Excessive litter is shading out plants. This inhibits photosynthesis and reduces soils temperatures, delaying green-up in the spring. Plants become decadent and exhibit low vigor. Bunch grasses often develop dead centers. Organic matter oxidizes in the air rather than being incorporated into the soil. The dominant plants tend to be somewhat similar to those found in the Historic Climax Plant Community. Weedy species, cool-season grasses, and sedges have increased. Prairie cordgrass has decreased. American licorice tends to invade. Noxious weeds such as purple loosestrife may invade if a seed source is present. Plant diversity is moderate to high.

The total annual production (air-dry weight) is about 5000 pounds per acre during an average year, but it can range from about 4500 pounds per acre in unfavorable years to about 5500 pounds per acre in above average years.

The following is the growth curve expected during an average year.
Growth curve number:
Growth curve name:
Growth curve description:

JAN	FEB	MAR	APR	MAY	JUN	JUL	AUG	SEP	OCT	NOV	DEC
0	0	0	10	25	35	15	5	5	5	0	0

(monthly percentages of total annual growth)

This plant community is not resistant to change. The introduction of grazing quickly changes the plant community. It is somewhat more vulnerable to severe disturbance than the HCPC. Bare ground has increased. The soil is not well protected. The watershed is functioning but may produce excessive runoff. The biotic community is at risk due to invasive plants.

Transitions or pathways leading to other plant communities are as follows:

- Prescribed Grazing over the long-term will return this plant community to near *Historic Climax Plant Community.*

Ecological Site Interpretations

Animal Community – Wildlife Interpretations

Prairie cordgrass, Nebraska sedge, Reedgrasses Plant Community: The predominance of grasses in this plant community favors grazers and mixed-feeders, such as bison, elk, and antelope. Suitable thermal and escape cover for deer may be limited due to the low quantities of woody plants. This plant community may provide brood rearing/foraging areas for sage grouse. Other birds that would frequent this plant community include red-wing blackbirds, sandhill cranes, Wilson snipe, western meadowlarks, and golden eagles. Many small mammals would occur here.

Baltic rush/Cattail Plant Community: This plant community may be useful for the same large grazers that would use the Historic Climax Plant Community. However, the plant community composition is less diverse, and thus, less apt to meet the seasonal needs of these animals. It may provide some foraging opportunities for sage grouse when it occurs proximal to woody cover. Good grasshopper habitat equals good foraging for birds.

Baltic rush/Smartweed Plant Community: This plant community may be useful for the same large grazers that would use the Historic Climax Plant Community. However, the plant community composition is less diverse, and thus, less apt to meet the seasonal needs of these animals. It may provide some foraging opportunities for sage grouse when it occurs proximal to woody cover. Good grasshopper habitat equals good foraging for birds.

Decadent Plants, Excess Litter Plant Community: This plant community may be useful for the same large grazers that would use the Historic Climax Plant Community. However, the plant community composition is less diverse, and thus, less apt to meet the seasonal needs of these animals. It may provide some foraging opportunities for sage grouse when it occurs proximal to woody cover. Good grasshopper habitat equals good foraging for birds.

Animal Preferences (Quarterly - 1,2,3,4) for commonly occuring plants in MLRA 67 North

Common Name	Scientific Name	Symbol	Cattle	Sheep	Horses	Antelope	Deer	Elk
GRASSES/GRASSLIKES								
alkali bluegrass	Poa juncifolia	POJU	UDUD	NDNU	UDUD	UDUU	UDUU	DPDD
alkali cordgrass	Spartina gracilis	SPGR	UDPU	UPDU	UPDU	UUDU	UUDU	UDPU
alkali muhly	Muhlenbergia asperifolia	MUAS	UUDU	UUDU	UUDU	UUDU	UUDU	UUDU
alkali sacaton	Sporobolus airoides	SPAI	UDPU	UPDU	UPDU	UUDU	UUDU	UDPU
Baltic rush	Juncus balticus	JUBA	NNNN	NNNN	NNNN	NNNN	NNNN	NNNN
basin wildrye	Leymus cinereus	LECI4	DPDD	UPDU	DPDD	UDUU	UDUU	DPDD
big bluestem	Andropogon gerardii	ANGE	UDPD	UDDU	UDPD	UUDU	UUDU	UDPD
blowout grass	Redfieldia flexuosa	REFL	UUDU	UUDU	UUDU	UUDU	UUDU	UUDU
blue grama	Bouteloua gracilis	BOGR2	UDPU	UDPU	UDPU	UUDU	UUDU	UUDU
bluebunch wheatgrass	Pseudoroegneria spicata	PSSP6	DPDD	UPDD	DPDD	UDUU	UDUU	DPDD
bluegrasses	Poa spp.	POA	UPUU	UPND	UPUU	UPND	UPND	UPUU
bluejoint reedgrass	Calamagrostis canadensis	CACA4	UPDU	UDUU	UPDU	UDUU	UDUU	UPDU
buffalograss	Buchloe dactyloides	BUDA	UDPU	UDPU	UDPU	UUDU	UUDU	UUDU
bulrush	Scirpus spp.	SCIRP	NNNN	NNNN	NNNN	NNNN	NNNN	NNNN
Canada wildrye	Elymus canadensis	ELCA4	UDUU	NUNN	UDUU	NUNN	NUNN	UDUU
Fendler's threeawn	Aristida purpurea var. fendleriana	ARPUF	NNNN	NNNN	NNNN	NNNN	NNNN	NNNN
foxtail barley	Hordeum jubatum	HOJU	NDNN	NDNN	NDNN	NDNN	NDNN	NDNN
green needlegrass	Nassella viridula	NAVI4	DPPD	UPDU	DPPD	UDUU	UDUU	DPPD
hairy grama	Bouteloua hirsuta	BOHI2	UDPU	UDPU	UDPU	UUDU	UUDU	UUDU
Indian ricegrass	Achnatherum hymenoides	ACHY	DPPD	UPDU	DPPD	UDUU	UDUU	DPPD
Indiangrass	Sorghastrum nutans	SONU2	UDPD	UDDU	UDPD	UUDU	UUDU	UDPD
inland saltgrass	Distichlis spicata	DISP	NUUN	NUUN	NUUN	NUUN	NUUN	NUUN
little bluestem	Schizachyrium scoparium	SCSC	UDPU	UPDU	UPDU	UUDU	UUDU	UDPU
muhly	Muhlenbergia spp.	MUHLE	UUDU	UUDU	UUDU	UUDU	UUDU	UUDU
Nebraska sedge	Carex nebrascensis	CANE2	UDUD	UPND	UDUD	UPND	UPND	UDUD
needleandthread	Hesperostipa comata ssp. comata	HECOC8	DPDD	UPDU	DPDD	UDUU	UDUU	DPDD
northern reedgrass	Calamagrostis stricta ssp. inexpansa	CASTI3	UPDU	UDUU	UPDU	UDUU	UDUU	UPDU
Nuttall's alkaligrass	Puccinellia nuttalliana	PUNU2	DPUD	NPND	DPUD	UDUU	UDUU	DPPD
panicgrass	Dichanthelium wilcoxianum	DIWI5	UUDU	NUNN	UUDU	NUNN	NUNN	UUDU
plains bluegrass	Poa arida	POAR3	NPUN	NPUN	NPUN	NDUN	NDUN	NPUN
plains muhly	Muhlenbergia cuspidata	MUCU3	UUDU	UUDU	UUDU	UUDU	UUDU	UUDU
plains reedgrass	Calamagrostis montanensis	CAMO	UPDU	UDUU	UPDU	UDUU	UDUU	UPDU
prairie cordgrass	Spartina pectinata	SPPE	UDPD	UDDU	UDPD	UUDU	UUDU	UDPD
prairie junegrass	Koeleria macrantha	KOMA	UDUU	NDNU	UDUU	UDUU	UDUU	UDUU
prairie sandreed	Calamovilfa longifolia	CALO	UDPU	UDUU	UDDU	UUDU	UUDU	UUDU
reed canarygrass	Phalaris arundinacea	PHAR3	UDUU	NUNN	UDUU	NUNN	NUNN	UDUU
rushes	Juncus spp.	JUNCU	NNNN	NNNN	NNNN	NNNN	NNNN	NNNN
sand bluestem	Andropogon hallii	ANHA	UDPD	UDDU	UDPD	UUDU	UUDU	UDPD
sand dropseed	Sporobolus cryptandrus	SPCR	NUUN	NUUN	NUUN	NUUN	NUUN	NUUN
sand lovegrass	Eragrostis trichodes	ERTR3	UDPU	UUDU	UDDU	UUDU	UUDU	UDDU
sand paspalum	Paspalum setaceum	PASE5	NUUN	NUUN	NUUN	NUUN	NUUN	NUUN
Sandberg bluegrass	Poa secunda	POSE	NPUN	NPUN	NPUN	NDUN	NDUN	NPUN
sandhill muhly	Muhlenbergia pungens	MUPU2	UUDU	UUDU	UUDU	UUDU	UUDU	UUDU
sedge	Carex spp.	CAREX	UDUD	UPND	UDUD	UPND	UPND	UDUD
sideoats grama	Bouteloua curtipendula	BOCU	UDPU	UPDU	UPDU	UUDU	UUDU	UUDU
slender wheatgrass	Elymus trachycaulus ssp. trachycaulus	ELTRT	DPDD	UPDD	DPDD	UDUU	UDUU	DPDD
spikerush	Eleocharis spp.	ELEOC	UUUU	UUUU	UUUU	UUUU	UUUU	UUUU
switchgrass	Panicum virgatum	PAVI2	UDPD	UDDU	UDPD	UUDU	UUDU	UDPD
thickspike wheatgrass	Elymus lanceolatus ssp. lanceolatus	ELLAL	DPDD	UPDD	DPDD	UDUU	UDUU	DPDD
threadleaf sedge	Carex filifolia	CAFI	UDUD	UPND	UDUD	UPND	UPND	UDUD
threeawn	Aristida spp.	ARIST	NNNN	NNNN	NNNN	NNNN	NNNN	NNNN
western wheatgrass	Pascopyrum smithii	PASM	DPDD	UPDD	DPDD	UDUU	UDUU	DPDD
FORBS								
American licorice	Glycyrrhiza lepidota	GLLE3	NNNN	NUUN	NNNN	NUUN	NUUN	NUUN
American vetch	Vicia americana	VIAM	UPPU	UPPU	UPPU	UPPU	UPPU	UPPU
arrowgrass	Triglochin spp.	TRIGL	TTTT	TTTT	TTTT	TTTT	TTTT	TTTT
aster	Aster spp.	ASTER	NNNN	NNNN	NNNN	NNNN	NNNN	NNNN
biscuitroot	Lomatium spp.	LOMAT	UDUU	UDDU	UDUU	UDDU	UDDU	UDDU
blue-eyed grass	Sisyrinchium spp.	SISYR	UUDU	UUPU	UUDU	UUDU	UUDU	UUDU
breadroot	Pediomelum spp.	PEDIO2	NUUN	UDUU	NUUN	UDUU	UDUU	UDUU
broadleaf cattail	Typha latifolia	TYLA	UUDU	UUUU	UUDU	UUUU	UUDU	UUDU
buckwheat	Eriogonum spp.	ERIOG	NNNN	UUUU	NNNN	UUUU	UUUU	UUUU
bush morningglory	Ipomoea leptophylla	IPLE	UUUU	UUUU	NNNN	UUUU	UUUU	UUUU
cinquefoil	Potentilla spp.	POTEN	NNNN	UUUU	NNNN	UUUU	UUUU	UUUU
cudweed sagewort	Artemisia ludoviciana	ARLU	UUUU	UUDU	UUUU	UUDU	UUDU	UUDU
curlycup gumweed	Grindelia squarrosa	GRSQ	NNNN	NNNN	NNNN	NNNN	NNNN	NNNN
deathcamas	Zigadenus venenosus	ZIVE	TTTT	TTTT	TTTT	TTTT	TTTT	TTTT
dotted gayfeather	Liatris punctata	LIPU	UPPU	UPPU	UPPU	UPPU	UPPU	UPPU
evening primroses	Oenothera spp.	OENOT	NNNN	NNNN	NNNN	NNNN	NNNN	NNNN
false boneset	Brickellia eupatorioides	BREU	NDUN	NDUN	NNNN	NDUN	NDUN	NDUN
fringed sagewort	Artemisia frigida	ARFR4	UUUU	UUUU	UUUU	UUUU	UUUU	UUUU
goldenrod	Solidago spp.	SOLID	NUNN	NUNN	NNNN	NUNN	NUNN	NUNN

Animal Preferences (Quarterly - 1,2,3,4) for commonly occuring plants in MLRA 67 North

green sagewort	Artemisia campestris	ARCA12	NNNN	NUUN	NNNN	NUUN	NUUN	NNNN
greenthread	Thelesperma spp.	THELE	NNNN	NNNN	NNNN	NNNN	NNNN	NNNN
groundsel	Senecio spp.	SENEC	NNNN	NNNN	NNNN	NNNN	NNNN	NNNN
hairy goldaster	Heterotheca villosa	HEVI4	NNNN	NNNN	NNNN	NNNN	NNNN	NNNN
heath aster	Symphyotrichum ericoides	SYER	NNNN	NNNN	NNNN	NNNN	NNNN	NNNN
iris	Iris spp.	IRIS	NUUN	NUUN	NNNN	NUUN	NUUN	NUUN
ironweed	Vernonia spp.	VERNO	NNNN	NNNN	NNNN	NNNN	NNNN	NNNN
Lambert crazyweed	Oxytropis lambertii	OXLA3	TTTT	TTTT	TTTT	TTTT	TTTT	TTTT
larkspur	Delphinium spp.	DELPH	TTTT	TTTT	TTTT	TTTT	TTTT	TTTT
lemon scurfpea	Psoralidium lanceolatum	PSLA3	NNNN	NUUN	NNNN	NUUN	NUUN	NUUN
Maximilian sunflower	Helianthus maximiliani	HEMA2	UDPU	UDPU	UDPU	UDPU	UDPU	UDPU
milkvetch	Astragalus spp.	ASTRA	UDUU	UDUU	UDUU	UDUU	UDUU	UDUU
nailwort	Paronychia spp.	PARON	NNNN	NNNN	NNNN	NNNN	NNNN	NNNN
Pennsylvania smartweed	Polygonum pensylvanicum	POPE2	NNNN	NNNN	NNNN	NNNN	NNNN	NNNN
penstemons	Penstemon spp.	PENST	UPPU	UPPU	UPPU	UPPU	UPPU	UPPU
perennial sunflowers	Helianthus spp.	HELIA3	UPPU	UPPU	UPPU	UPPU	UPPU	UPPU
phlox	Phlox spp.	PHLOX	NNNN	NNNN	NNNN	NNNN	NNNN	NNNN
poison hemlock	Conium maculatum	COMA2	TTTT	TTTT	TTTT	TTTT	TTTT	TTTT
prairie clovers	Dalea spp.	DALEA	UPPU	UPPU	UPPU	UPPU	UPPU	UPPU
prairie coneflower	Ratibida columnifera	RACO3	UPPU	UPPU	UPPU	UPPU	UPPU	UPPU
purple prairie clover	Dalea purpurea	DAPU5	UPPU	UPPU	UPPU	UPPU	UPPU	UPPU
Pursh seepweed	Suaeda calceoliformis	SUCA2	NNNN	NNNN	NNNN	NNNN	NNNN	NNNN
pussytoes	Antennaria spp.	ANTEN	NNNN	NNNN	NNNN	NNNN	NNNN	NNNN
rush skeletonplant	Lygodesmia juncea	LYJU	NNNN	NNNN	NNNN	NNNN	NNNN	NNNN
sandwort	Arenaria spp.	ARENA	NNNN	NNNN	NNNN	NNNN	NNNN	NNNN
scarlet gaura	Gaura coccinea	GACO5	NNNN	NUUN	NNNN	NUUN	NUUN	NNNN
scarlet globemallow	Sphaeralcea coccinea	SPCO	UUDU	UDDU	UUDU	UPPU	UDDD	UDDD
scurfpea	Psoralidium spp.	PSORA2	NNNN	NUUN	NNNN	NUUN	NUUN	NUUN
showy peavine	Lathyrus polymorphus	LAPO2	UPPU	UPPU	UPPU	UPPU	UPPU	UPPU
silky prairie clover	Dalea villosa	DAVI	UPPU	UPPU	UPPU	UPPU	UPPU	UPPU
slimflower scurfpea	Psoralidium tenuiflorum	PSTE5	NNNN	NUUN	NNNN	NUUN	NUUN	NUUN
spiderworts	Tradescantia spp.	TRADE	NNNN	NNNN	NNNN	NNNN	NNNN	NNNN
stiff sunflower	Helianthus pauciflorus	HEPA19	UDPU	UDPU	UDPU	UDPU	UDPU	UDPU
swamp smartweed	Polygonum hydropiperoides	POHY2	NNNN	NNNN	NNNN	NNNN	NNNN	NNNN
tenpetal blazingstar	Mentzelia decapetala	MEDE2	NNNN	NNNN	NNNN	NNNN	NNNN	NNNN
veiny dock	Rumex venosus	RUVE2	NNNN	NUUN	NNNN	NUUN	NUUN	NUUN
water hemlock	Cicuta spp.	CICUT	TTTT	TTTT	TTTT	TTTT	TTTT	TTTT
western ragweed	Ambrosia psilostachya	AMPS	NNNN	NNNN	NNNN	NNNN	NNNN	NNNN
western yarrow	Achillea millefolium	ACMI2	NUUN	NUUN	NNNN	NUUN	NUUN	NUUN
white prairie clover	Dalea candida	DACA7	UPPU	UPPU	UPPU	UPPU	UPPU	UPPU
whiteflower gilia	Ipomopsis longiflora ssp. longiflora	IPLOL	NUUN	NUUN	NNNN	NUUN	NUUN	NUUN
wild onion	Allium textile	ALTE	UDUU	UDUU	UDUU	UDUU	UDUU	UDUU
wild strawberry	Fragaria virginiana	FRVI	NNNN	NUUN	NNNN	NUUN	NUUN	NUUN
woollywhite hymenopappus	Hymenopappus tenuifolius	HYTE2	NNNN	NNNN	NNNN	NNNN	NNNN	NNNN
TREES, SHRUBS, AND HALF-SHRUBS								
antelope bitterbrush	Purshia tridentata	PUTR2	PDDD	PDDD	DDUD	PDDP	PDPP	PDDP
Arkansas rose	Rosa arkansana	ROAR3	UDDU	UDDU	NUUN	UDDU	UDDU	UDDU
big sagebrush	Artemisia tridentata	ARTR2	UNUU	DUUD	UNNU	PPPP	PUDP	DUUU
boxelder	Acer negundo	ACNE2	UUUU	UUUU	UUUU	UUUU	UUUU	UUUU
brittle cactus	Opuntia fragilis	OPFR	NNNN	NNNN	NNNN	NNNN	NNNN	NNNN
broom snakeweed	Gutierrezia sarothrae	GUSA2	NNNN	UUUU	NNNN	UUUU	UUUU	UUUU
fourwing saltbush	Atriplex canescens	ATCA2	PDDP	PDDP	PDDP	PDDP	PDDP	PDDP
Gardner's saltbush	Atriplex gardneri	ATGA	PDDP	PDDP	DUUD	PDDP	PDDP	PDDP
greasewood (Toxic in large amounts)	Sarcobatus vermiculatus	SAVE4	DUUD	DUUD	DUUD	DUUD	DUUD	DUUD
green ash	Fraxinus pennsylvanica	FRPE	UUUU	UUUU	UUUU	UDDU	UDDU	UUUU
green rabbitbrush	Chrysothamnus viscidiflorus	CHVI8	DUUD	DUUD	UNNU	PUDD	PUDD	DUUD
leadplant	Amorpha canescens	AMCA6	UPDU	UPDU	UDDU	UPDU	UPDU	UPDU
plains cottonwood	Populus deltoides ssp. monilifera	PODEM	DUDD	DUDD	DUDD	DUDD	DUDD	DUDD
plains pricklypear	Opuntia polyacantha	OPPO	NNNN	NNNN	NNNN	NNNN	NNNN	NNNN
ponderosa pine	Pinus ponderosa var. scopulorum	PIPOS	UTTU	UNNU	UNNU	UNNU	UNNU	UNNU
Rocky Mountain juniper	Juniperus scopulorum	JUSC2	UNNU	UNNU	UNNU	UNNU	DUUD	UNNU
rose	Rosa spp.	ROSA5	UDDU	UDDU	NUUN	UDDU	UDDU	UDDU
rubber rabbitbrush	Ericameria nauseosa	ERNA10	UUUU	DUUD	UUUU	UDDU	DUUD	DUUU
sand sagebrush	Artemisia filifolia	ARFI2	UNNU	UNNU	UNNU	UNNU	UNNU	UNNU
silver buffaloberry	Shepherdia argentea	SHAR	DUUU	DUUU	UUUU	UUUU	PUDP	DUUU
silver sagebrush	Artemisia cana	ARCA13	DUUD	DUUD	UNNU	PPPP	PDDP	DUUD
skunkbush sumac	Rhus trilobata	RHTR	DUUD	DUUD	UUUU	DUUD	DUUD	DUUD
spreading buckwheat	Eriogonum effusum	EREF	UUUU	UUUU	UUUU	UUUU	UUUU	UUUU
true mountainmahogany	Cercocarpus montanus	CEMO2	DDDD	PDDD	DDDD	UNNU	PDDP	PDDD
western sandcherry	Prunus pumila var. besseyi	PRPUB	DUUD	DUUD	DUUD	DUUD	PUDP	PUUP
western snowberry	Symphoricarpos occidentalis	SYOC	UUUU	UUUU	UUUU	UUUU	DUDD	DUUU
willows	Salix spp.	SALIX	PUDP	PUDP	DUUD	UUUU	PUDP	PUDP
winterfat	Krascheninnikovia lanata	KRLA2	PPPP	PPPP	PPPP	PPPP	PPPP	PPPP
yucca	Yucca glauca	YUGL	DUUD	DUUD	UUUU	DUUD	DUUD	DUUD

Animal Community – Grazing Interpretations

The following table lists suggested stocking rates for cattle under continuous season-long grazing under normal growing conditions. These are conservative estimates that should be used only as guidelines in the initial stages of the conservation planning process. Often, the current plant composition does not entirely match any particular plant community (as described in this ecological site description). Because of this, a field visit is recommended, in all cases, to document plant composition and production. More precise carrying capacity estimates should eventually be calculated using this information along with animal preference data, particularly when grazers other than cattle are involved. Under more intensive grazing management, improved harvest efficiencies can result in an increased carrying capacity. If distribution problems occur, stocking rates must be reduced to maintain plant vigor.

Plant Community 12-17" P.Z.	**Production (lb./ac)**	**Carrying Capacity* (AUM/ac)**
Historic Climax Plant Community	5000-6000	3.0
Baltic rush/Cattail	2000-4000	2.0
Baltic rush/Smartweed	1200-2500	1.0
Decadent Plants, Excess Litter	4500-5500	2.5

* - Continuous, season-long grazing by cattle under average growing conditions.

Grazing by domestic livestock is one of the major income-producing industries in the area. Rangeland in this area may provide yearlong forage for cattle, sheep, or horses. During the dormant period, the forage for livestock use needs to be supplemented with protein because the quality does not meet minimum livestock requirements.

Hydrology Functions

Climate is the principal factor limiting forage production on this site. This site is dominated by soils in hydrologic group B and C, with localized areas in hydrologic group D. Infiltration and runoff potential for this site varies from moderate to high depending on soil hydrologic group and water table. Runoff will be high on this site since the soil may be saturated. (Refer to Part 630, NRCS National Engineering Handbook for detailed hydraulic information.

Rills and gullies should not typically be present. Water flow patterns should be barely distinguishable if at all present. Litter typically falls in place, and signs of movement are not common. Chemical and physical crusts are rare to non-existent. Cryptogamic crusts are present, but only cover 1-2% of the soil surface.

Recreational Uses

This site provides hunting opportunities for upland game species. The wide variety of plants which bloom from spring until fall have an esthetic value that appeals to visitors.

Wood Products

No appreciable wood products are present on the site.

Other Products
None noted.

Supporting Information

Associated Sites

Subirrigated	067XY174WY
Clayey Overflow	067XY106WY
Loamy Overflow	067XY126WY
Loamy Lowland	067XY124WY
Sandy Lowland	067XY152WY
Lowland	067XY128WY

Similar Sites
R067XY174WY, Subirrigated 12-17" P.Z. is less productive

Inventory Data References (narrative)
Information presented here has been derived from NRCS clipping data and other inventory data. Field observations from range trained personnel was also used.

Inventory Data References

Data Source	Number of Records	Sample Period	State	County
SCS-RANGE-417	110	1963-1987	WY	Platte & others

State Correlation
This site has been correlated with Colorado, Nebraska, and Wyoming.

Type Locality

Field Offices
Wyoming: Cheyenne, Douglas, Lusk, Torrington, Wheatland
Colorado: Greeley, Sterling
Nebraska: Bridgeport, Harrisburg, Kimball, Oshkosh, Scottsbluff, Sidney

Relationship to Other Established Classifications

Other References
Other sources used as references include: USDA NRCS Water and Climate Center, USDA NRCS National Range and Pasture Handbook, and USDA NRCS Soil Surveys from various counties.

Site Description Approval

_____ _____
State Range Management Specialist Date

_____ _____
State Range Management Specialist Date

_____ _____
State Range Management Specialist Date