Clear Print Save File

NB-ENC-51
Rev, 1 11-73
(File Cod,: ENG-13)

USDA-SCS

FIELD HYDRAULIC CONDUCTIVITY TEST
AUGER HOLE METHOD

DRAINAGE INVESTIGATIONS

Hole No._____
Location_____

Technician _____
Date _____
Auger dia. ____ in. Depth(D) _____
Soil type _____
Caving or sloughing _____
Number of times auger hole cleaned _____
Soil ph. _____
Groundwater ph._____

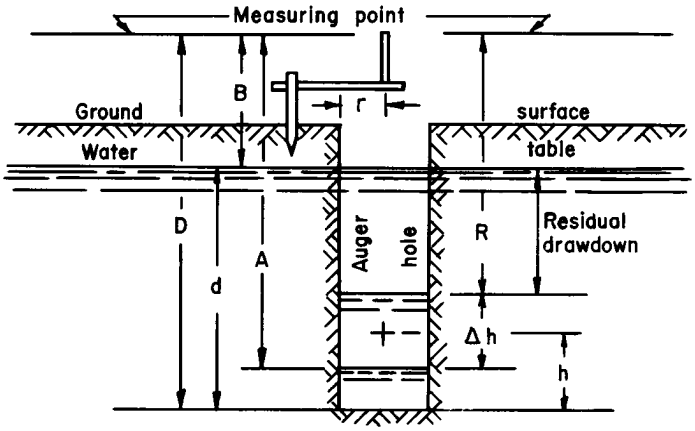

RECORD OF TEST

Elapsed Time (Min.) Start at	Δt (Min.)	Distance to Water Surface From Reference Point			Δh	Residual Drawdown
		Before Pumping B (ft.)	After Pumping A (ft.)	During Recharging R (ft.)	A-B (ft.)	R-B (ft.)
____:____A.M., P.M.	xxx		xxx	xxx	xxx	xxx
0.0	xxx	xxx			0.00	

COMPUTING THE HYDRAULIC CONDUCTIVITY (HC or P)

$$HC = 444 \frac{r}{S_d} \frac{\Delta h}{\Delta t}$$

HC (or 'P') = Hydraulic conductivity in inches per hour
r = Radius of auger hole in feet
S = Function from figure on this page
d = Depth of water in auger hole in feet (D - B)
Δh =Is that (A-R) value at the time that the rate of rise of water in the auger hole becomes nonuniform
Δt =Elapsed time in minutes corresponding to the "Ah" value selected
h = Average depth of water in auger hole during test $\left(D - A + \frac{\Delta h}{2}\right)$

From 'test data' -
r = _____, d =_____,
h = _____, t = _____,
r/d= _____, h/d=_____,
then S (from chart above)_____.

$$HC(or\ P) = 444 \frac{____}{____} x \frac{____}{____} = _____ \text{in./hr.}$$

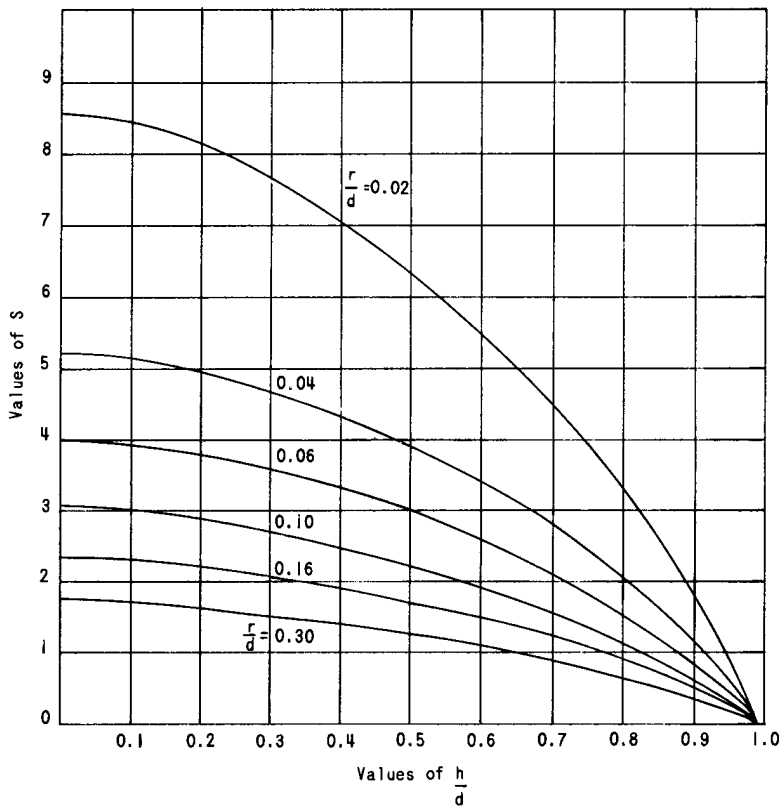

COMPUTING THE RECOMMENDED TILE SPACING

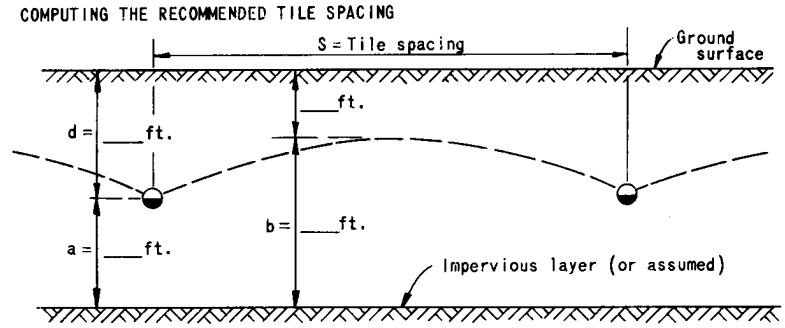

$$\text{ELLIPSE FORMULA } S = \sqrt{\frac{4P\left(b^2 - a^2\right)}{Qd}}$$

Where –

S = Tile spacing in feet (parallel system - relief drains)
HC (or 'P') = Hydraulic conductivity
b = Distance between water table at apex between tile drains to an impervious layer. Where no impervious layer exists, assume one to be present at a depth equal to twice the drain depth.
a = Distance between tile and impervious layer, or 'assumed layer'.
Qd = Drainage coefficient - in inches per hour*

Then –

$$S = \sqrt{\frac{4____\left(____^2 - ____^2\right)}{____}} = \sqrt{\frac{4____\left(____\right)}{____}} = \sqrt{____} = _____$$

* Drainage coefficients (Qd) vary with local conditions. Under usual dry land conditions, 1/4" to 3/8" in 24 hours (0.010" to 0.015" in I hour), should be used in Nebraska.