United States Department of Agriculture
Natural Resources Conservation Service

Ecological Site Description

Site Type: Rangeland

Site Name: Sands 18-22" P.Z.

Site ID: R066XY033NE

Major Land Resource Area:
66 – Dakota - Nebraska Eroded Tableland

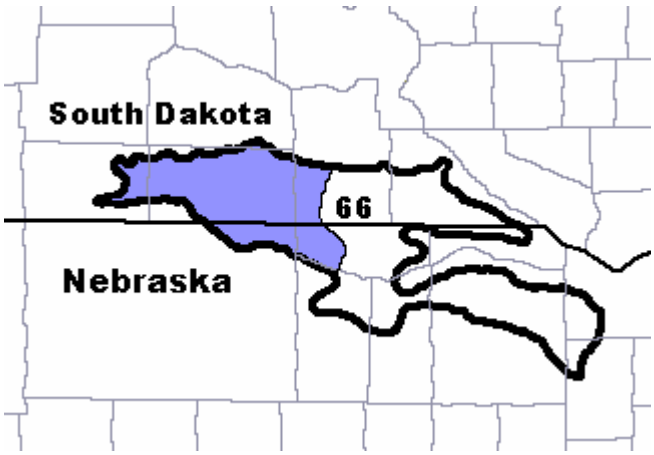

Physiographic Features
This site occurs on dunes of uplands where eolian sands have been deposited.

Landform: dune

Aspect: N/A

	Minimum	Maximum
Elevation (feet):	1900	3000
Slope (percent):	3	60
Water Table Depth (inches):	None	None
Flooding:		
Frequency:	None	None
Duration:	None	None
Ponding:		
Depth (inches):	None	None
Frequency:	None	None
Duration:	None	None
Runoff Class:	Negligible	Low

Climatic Features
MLRA 66 is considered to have a continental climate – cold winters and hot summers, low humidity, light rainfall, and much sunshine. Extremes in temperature may also abound. The climate is the result of this MLRA's location near the geographic center of North America. There are few natural barriers on the northern Great Plains and the winds move freely across the plains and account for rapid changes in temperature.

Annual precipitation ranges from 18 to 22 inches per year. The normal average annual temperature is about 47° F. January is the coldest month with average temperatures ranging from about 20° F (Valentine, NE) to about 23° F (Ainsworth, NE). July is the warmest month with temperatures averaging from about 73° F (Harrington, SD) to about 75° F (Ainsworth, NE). The range of normal average monthly temperatures between the coldest and warmest months is about 53° F. This large annual range attests to the continental nature of this area's climate. Hourly winds average about 10 miles per hour annually, ranging from about 11 miles per hour during the spring to about 9 miles per hour during the summer. Daytime winds are generally stronger than nighttime and occasional strong storms may bring brief periods of high winds with gusts to more than 50 miles per hour.

Growth of native cool season plants begins mid to late March and continues to late June. Native warm season plants begin growth in early May and continue to late August. Green up of cool season plants may occur in September and October when adequate soil moisture is present.

	Minimum	Maximum
Frost-free period (days):	127	154
Freeze-free period (days):	144	172
Mean Annual Precipitation (inches):	18	22

Average Monthly Precipitation (inches) and Temperature (ºF):

	Precip. Min.	Precip. Max	Temp. Min.	Temp. Max.
January	0.28	0.42	8.2	33.6
February	0.48	0.63	13.5	38.9
March	0.92	1.23	21.3	46.9
April	1.94	2.26	31.7	60.6
May	3.08	3.38	42.8	71.6
June	3.10	3.67	52.6	81.3
July	2.86	3.17	58.5	87.8
August	2.33	2.65	56.2	86.1
September	1.54	2.30	45.9	76.8
October	1.03	1.34	33.7	64.9
November	0.55	0.82	20.8	47.6
December	0.32	0.45	11.2	37.1

Climate Stations		**Period**	
Station ID	**Location or Name**	**From**	**To**
NE0050	Ainsworth	1948	2003
SD3574	Harrington	1960	2003
NE8760	Valentine WSO AP	1948	2003

For other climate stations that may be more representative, refer to http://www.wcc.nrcs.usda.gov.

Influencing Water Features

No significant water features influence this site.

Representative Soil Features

The features common to all soils in this site are the sandy textured surface layer and control section, low available water capacity, and slopes of 3 to 60 percent. The soils in this site are excessively drained and formed in eolian sands on dunes. The surface layer is 2 to 9 inches thick. The control section textures are fine sand, sand, or loamy fine sand. Runoff as evidenced by patterns of rill, gully or other water flow is negligible to low depending on the percent of slope. Water infiltration is high because of the sandy surface layer. Cryptobiotic crusts are present, but their function is not well understood. Some pedestalling of plants occurs, but it is not very evident on casual observation and occurs on less than 5% of the plants.

More information can be found in the various soil survey reports. Contact the local USDA Service Center for soil survey reports that include more detail specific to your location.

Parent Material Kind: eolian deposits
Parent Material Origin: mixed
Surface Texture: fine sand, loamy fine sand, sand
Surface Texture Modifier: none
Subsurface Texture Group: sandy

Surface Fragments ≤ 3" (% Cover): 0
Surface Fragments > 3" (%Cover): 0
Subsurface Fragments ≤ 3" (% Volume): 0-15
Subsurface Fragments > 3" (% Volume): 0

	Minimum	Maximum
Drainage Class:	excessively	excessively
Permeability Class:	rapid	rapid
Depth (inches):	80	80
Electrical Conductivity (mmhos/cm)*:	0	0
Sodium Absorption Ratio*:	0	0
Soil Reaction (1:1 Water)*:	5.6	8.4
Soil Reaction (0.1M CaCl2)*:	NA	NA
Available Water Capacity (inches)*:	3	3
Calcium Carbonate Equivalent (percent)*:	0	0

* These attributes represent 0-40 inches in depth or to the first restrictive layer.

Plant Communities

Ecological Dynamics of the Site:
Historically, large areas of blowing sand resulted in the active movement of the sand dunes. Evaporation from the soil surface was extremely high due to the large areas of bare ground, lack of litter and sparse plant populations. The transpiration rate of these sparse plant populations was also high due to the harsh soil environment. Occasional wild fires, severe grazing by transient bison herds and drought contributed to the lack of stability of the sand dunes. This lack of stability caused the dunes to go back and forth through multiple stages of plant succession over the course of time. Early perennial plants such as sandhill muhly, blowout grass and blowout penstemon were common due to their ability to tolerate the movement of the sand and droughty conditions. As these plants began to colonize and stabilize the sand movement, other perennials such as prairie sandreed, sand bluestem, hairy grama, lemon scurfpea and rose slowly became evident on the site. Annual native plants such as sandbur, woolly Indianwheat, annual eriogonum and annual sunflower eventually colonized the areas between the perennials.

As this site deteriorates, prairie sandreed, sand dropseed, and blue grama will increase. Species such as sand bluestem and switchgrass will decrease in frequency and production. The site is extremely resilient and well adapted to the Northern Great Plains climatic conditions. The diversity in plant species allows for high drought resistance.

Interpretations are primarily based on the Bluestem/Prairie Sandreed/Needlegrass Plant Community. It has been determined by study of rangeland relic areas, areas protected from excessive disturbance, and areas under long-term rotational grazing regimes. Trends in plant community dynamics ranging from heavily grazed to lightly grazed areas, seasonal use pastures, and historical accounts also have been used. Subclimax plant communities, states, transitional pathways, and thresholds have been determined through similar studies and experience.

The following is a diagram that illustrates the common plant communities that can occur on the site and the transition pathways between communities. The ecological processes will be discussed in more detail in the plant community descriptions following the diagram.

Plant Communities and Transitional Pathways

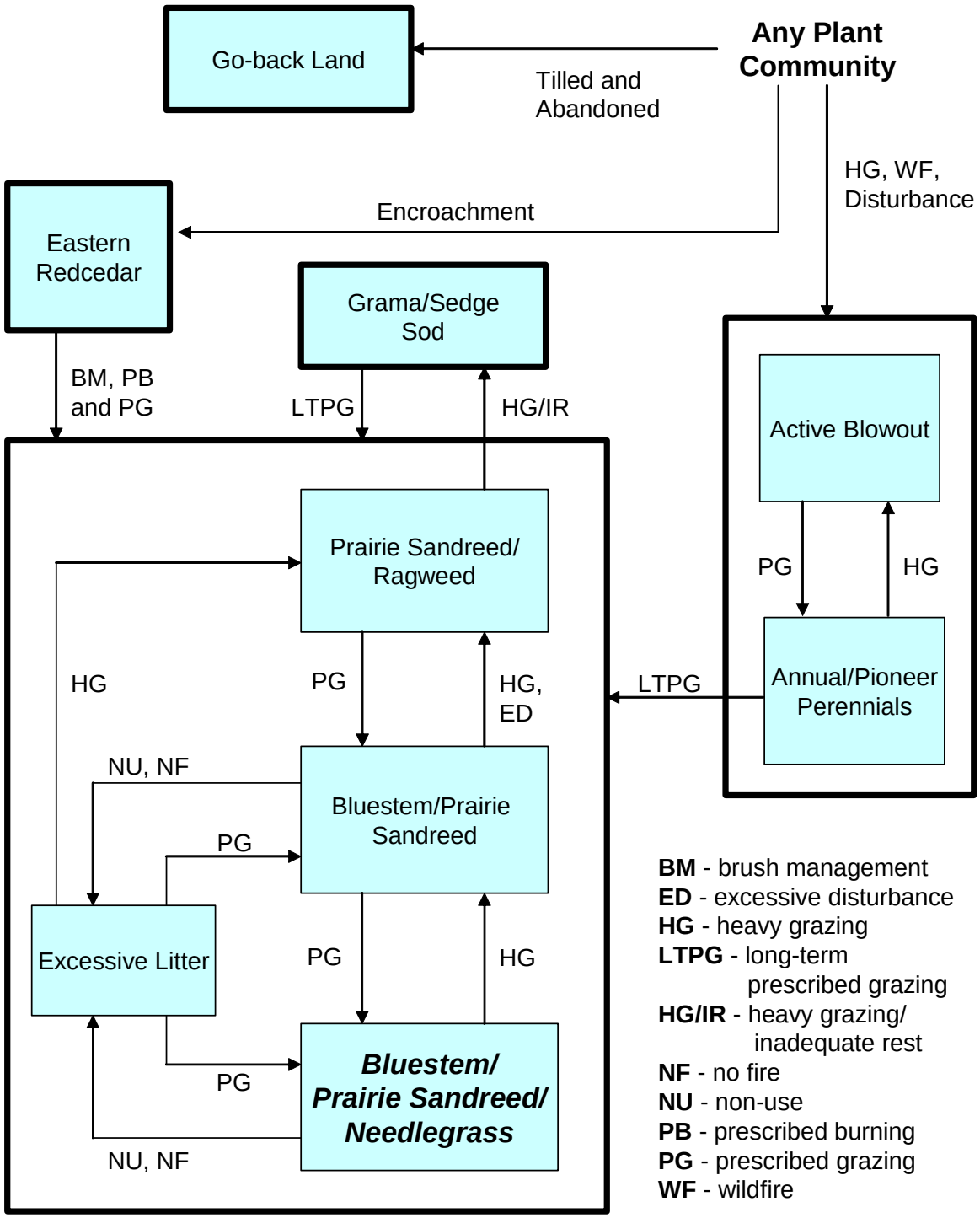

BM - brush management
ED - excessive disturbance
HG - heavy grazing
LTPG - long-term prescribed grazing
HG/IR - heavy grazing/ inadequate rest
NF - no fire
NU - non-use
PB - prescribed burning
PG - prescribed grazing
WF - wildfire

Plant Community Composition and Group Annual Production

			Bluestem/Prairie Sandreed/Needlegrass		
COMMON/GROUP NAME	**SCIENTIFIC NAME**	**SYMBOL**	**Group**	**lbs./acre**	**% Comp**
GRASSES & GRASS-LIKES				*1840 - 2070*	*80 - 90*
sand bluestem	Andropogon hallii	ANHA	1	460 - 920	20 - 40
prairie sandreed	Calamovilfa longifolia	CALO	2	345 - 805	15 - 35
little bluestem	Schizachyrium scoparium	SCSC	3	345 - 575	15 - 25
NEEDLEGRASS			**4**	**115 - 345**	**5 - 15**
needleandthread	Hesperostipa comata ssp. comata	HECOC8	4	115 - 345	5 - 15
porcupine grass	Hesperostipa spartea	HESP11	4	0 - 115	0 - 5
GRAMA			**5**	**115 - 230**	**5 - 10**
blue grama	Bouteloua gracilis	BOGR2	5	115 - 230	5 - 10
hairy grama	Bouteloua hirsuta	BOHI2	5	115 - 230	5 - 10
OTHER WARM-SEASON			**6**	**115 - 345**	**5 - 15**
switchgrass	Panicum virgatum	PAVI2	6	115 - 230	5 - 10
Indiangrass	Sorghastrum nutans	SONU2	6	0 - 115	0 - 5
sand dropseed	Sporobolus cryptandrus	SPCR	6	0 - 115	0 - 5
sand paspalum	Paspalum setaceum	PASE5	6	0 - 46	0 - 2
sand lovegrass	Eragrostis trichodes	ERTR3	6	23 - 115	1 - 5
NATIVE GRASS/GRASS-LIKES			**7**	**46 - 184**	**2 - 8**
Indian ricegrass	Achnatherum hymenoides	ACHY	7	0 - 46	0 - 2
prairie junegrass	Koeleria macrantha	KOMA	7	23 - 115	1 - 5
Scribner panicum	Dichanthelium oligosanthes var. scribnerianur	DIOLS	7	0 - 46	0 - 2
sedge	Carex spp.	CAREX	7	23 - 115	1 - 5
other perennial grasses		2GP	7	0 - 46	0 - 2
FORBS			*9*	*115 - 230*	*5 - 10*
gayfeather	Liatris spp.	LIATR	9	0 - 46	0 - 2
green sagewort	Artemisia dracunculus	ARDR4	9	0 - 46	0 - 2
heath aster	Symphyotrichum ericoides	SYER	9	0 - 23	0 - 1
Missouri goldenrod	Solidago missouriensis	SOMI2	9	0 - 46	0 - 2
prairie coneflower	Ratibida columnifera	RACO3	9	0 - 23	0 - 1
purple prairie clover	Dalea purpurea	DAPU5	9	0 - 23	0 - 1
rush skeletonweed	Lygodesmia juncea	LYJU	9	0 - 23	0 - 1
scurfpea	Psoralidium spp.	PSORA2	9	0 - 23	0 - 1
spiderwort	Tradescantia spp.	TRADE	9	0 - 23	0 - 1
spiny phlox	Phlox hoodii	PHHO	9	0 - 23	0 - 1
stiff sunflower	Helianthus pauciflorus	HEPA19	9	0 - 46	0 - 2
western ragweed	Ambrosia psilostachya	AMPS	9	0 - 23	0 - 1
other perennial forbs		2FP	9	0 - 46	0 - 2
SHRUBS			*10*	*69 - 230*	*3 - 10*
cactus	Opuntia spp.	OPUNT	10	0 - 23	0 - 1
leadplant	Amorpha canescens	AMCA6	10	23 - 69	1 - 3
rose	Rosa spp.	ROSA5	10	23 - 69	1 - 3
small soapweed	Yucca glauca	YUGL	10	0 - 23	0 - 1
western sandcherry	Prunus pumila var. besseyi	PRPUB	10	23 - 69	1 - 3
other shrubs		2SHRUB	10	0 - 69	0 - 3

Annual Production lbs./acre	LOW RV HIGH
GRASSES & GRASS-LIKES	1625 - 1978 - 2500
FORBS	110 - 173 - 250
SHRUBS	65 - 150 - 250
TOTAL	1800 - 2300 - 3000

This list of plants and their relative proportions are based on near normal years. Fluctuations in species composition and relative production may change from year to year dependent upon precipitation or other climatic factors. RV = Representative value.

Plant Community Composition and Group Annual Production

		Bluestem/Prairie Sandreed/Needlegrass			Bluestem/Prairie Sandreed			Prairie Sandreed/Ragweed			Excessive Litter		
COMMON/GROUP NAME	**SYMBOL**	**Grp**	**lbs./acre**	**% Comp**	**Grp**	**lbs./acre**	**% Comp**	**Grp**	**lbs./acre**	**% Comp**	**Grp**	**lbs./acre**	**% Comp**
GRASSES & GRASS-LIKES			*1840 - 2070*	*80 - 90*		*1600 - 1800*	*80 - 90*		*900 - 1200*	*60 - 80*		*1890 - 1995*	*90 - 95*
sand bluestem	ANHA	1	460 - 920	20 - 40	1	300 - 800	15 - 40	1	0 - 75	0 - 5	1	315 - 735	15 - 35
prairie sandreed	CALO	2	345 - 805	15 - 35	2	200 - 400	10 - 20	2	225 - 375	15 - 25	2	210 - 630	10 - 30
little bluestem	SCSC	3	345 - 575	15 - 25	3	200 - 500	10 - 25	3	0 - 75	0 - 5	3	210 - 420	10 - 20
NEEDLEGRASS		**4**	**115 - 345**	**5 - 15**	**4**	**0 - 100**	**0 - 5**	**4**	**0 - 75**	**0 - 5**	**4**	**105 - 420**	**5 - 20**
needleandthread	HECOC8	4	115 - 345	5 - 15	4	0 - 100	0 - 5	4	0 - 75	0 - 5	4	105 - 420	5 - 20
porcupine grass	HESP11	4	0 - 115	0 - 5							4	105 - 315	5 - 15
GRAMA		**5**	**115 - 230**	**5 - 10**	**5**	**100 - 200**	**5 - 10**	**5**	**150 - 300**	**10 - 20**	**5**	**0 - 105**	**0 - 5**
blue grama	BOGR2	5	115 - 230	5 - 10	5	100 - 200	5 - 10	5	150 - 225	10 - 15	5	0 - 105	0 - 5
hairy grama	BOHI2	5	115 - 230	5 - 10	5	100 - 200	5 - 10	5	75 - 150	5 - 10	5	0 - 105	0 - 5
OTHER WARM-SEASON		**6**	**115 - 345**	**5 - 15**	**6**	**200 - 300**	**10 - 15**	**6**	**75 - 225**	**5 - 15**	**6**	**210 - 315**	**10 - 15**
switchgrass	PAVI2	6	115 - 230	5 - 10	6	100 - 200	5 - 10				6	105 - 210	5 - 10
Indiangrass	SONU2	6	0 - 115	0 - 5									
sand dropseed	SPCR	6	0 - 115	0 - 5	6	100 - 200	5 - 10	6	75 - 225	5 - 15	6	105 - 210	5 - 10
sand paspalum	PASE5	6	0 - 46	0 - 2	6	0 - 100	0 - 5				6	0 - 105	0 - 5
sand lovegrass	ERTR3	6	23 - 115	1 - 5									
purple lovegrass	ERSP				6	0 - 100	0 - 5	6	0 - 45	0 - 3	6	0 - 63	0 - 3
sandhill muhly	MUPU2				6	0 - 100	0 - 5						
blowout grass	REFL												
threeawn	ARIST										6	0 - 63	0 - 3
sandbur	CELO3										6	0 - 63	0 - 3
NATIVE GRASS/GRASS-LIKES		**7**	**46 - 184**	**2 - 8**	**7**	**40 - 200**	**2 - 10**	**7**	**75 - 225**	**5 - 15**	**7**	**21 - 105**	**1 - 5**
Indian ricegrass	ACHY	7	0 - 46	0 - 2									
prairie junegrass	KOMA	7	23 - 115	1 - 5	7	0 - 100	0 - 5	7	0 - 30	0 - 2	7	0 - 105	0 - 5
Scribner panicum	DIOLS	7	0 - 46	0 - 2	7	0 - 200	0 - 10	7	75 - 150	5 - 10			
sedge	CAREX	7	23 - 115	1 - 5	7	20 - 100	1 - 5	7	75 - 150	5 - 10	7	21 - 42	1 - 2
other perennial grasses	2GP	7	0 - 46	0 - 2	7	0 - 40	0 - 2	7	0 - 75	0 - 5	7	0 - 42	0 - 2
NON-NATIVE GRASSES		**8**			**8**			**8**	**150 - 300**	**10 - 20**	**8**	**42 - 210**	**2 - 10**
cheatgrass	BRTE								0 - 75	0 - 5	8	21 - 210	1 - 10
bluegrass	POA								150 - 300	10 - 20	8	21 - 210	1 - 10
FORBS		*9*	*115 - 230*	*5 - 10*	*9*	*100 - 300*	*5 - 15*	*9*	*150 - 375*	*10 - 25*	*9*	*42 - 105*	*2 - 5*
annual sunflower	HEAN3							9	0 - 30	0 - 2	9	0 - 63	0 - 3
gayfeather	LIATR	9	0 - 46	0 - 2	9	0 - 40	0 - 2	9	15 - 75	1 - 5	9	0 - 42	0 - 2
green sagewort	ARDR4	9	0 - 46	0 - 2	9	20 - 80	1 - 4	9	15 - 75	1 - 5	9	0 - 63	0 - 3
heath aster	SYER	9	0 - 23	0 - 1	9	20 - 60	1 - 3	9	15 - 45	1 - 3	9	0 - 21	0 - 1
Missouri goldenrod	SOMI2	9	0 - 46	0 - 2	9	20 - 80	1 - 4	9	15 - 75	1 - 5	9	0 - 21	0 - 1
prairie coneflower	RACO3	9	0 - 23	0 - 1	9	0 - 20	0 - 1	9	0 - 15	0 - 1	9	0 - 21	0 - 1
purple prairie clover	DAPU5	9	0 - 23	0 - 1	9	0 - 20	0 - 1	9	0 - 15	0 - 1	9	0 - 21	0 - 1
Rocky Mountain beeplant	CLSE							9	0 - 30	0 - 2	9	0 - 21	0 - 1
rush skeletonweed	LYJU	9	0 - 23	0 - 1	9	0 - 20	0 - 1				9	0 - 21	0 - 1
scurfpea	PSORA2	9	0 - 23	0 - 1	9	0 - 20	0 - 1	9	15 - 75	1 - 5	9	0 - 63	0 - 3
spiderwort	TRADE	9	0 - 23	0 - 1	9	0 - 20	0 - 1	9	0 - 75	0 - 5			
spiny phlox	PHHO	9	0 - 23	0 - 1	9	0 - 20	0 - 1				9	0 - 21	0 - 1
stiff sunflower	HEPA19	9	0 - 46	0 - 2	9	0 - 20	0 - 1						
verbena	VERBE							9	0 - 30	0 - 2			
western ragweed	AMPS	9	0 - 23	0 - 1	9	20 - 100	1 - 5	9	150 - 300	10 - 20	9	0 - 105	0 - 5
other perennial forbs	2FP	9	0 - 46	0 - 2	9	0 - 40	0 - 2	9	15 - 75	1 - 5	9	0 - 42	0 - 2
other annual forbs	2FA				9	0 - 20	0 - 1	9	0 - 75	0 - 5	9	0 - 42	0 - 2
SHRUBS		*10*	*69 - 230*	*3 - 10*	*10*	*100 - 200*	*5 - 10*	*10*	*150 - 225*	*10 - 15*	*10*	*42 - 105*	*2 - 5*
cactus	OPUNT	10	0 - 23	0 - 1	10	0 - 20	0 - 1	10	15 - 45	1 - 3	10	0 - 21	0 - 1
leadplant	AMCA6	10	23 - 69	1 - 3	10	20 - 60	1 - 3	10	0 - 15	0 - 1	10	0 - 63	0 - 3
rose	ROSA5	10	23 - 69	1 - 3	10	40 - 100	2 - 5	10	30 - 150	2 - 10	10	0 - 63	0 - 3
small soapweed	YUGL	10	0 - 23	0 - 1	10	0 - 60	0 - 3	10	15 - 75	1 - 5	10	0 - 21	0 - 1
western sandcherry	PRPUB	10	23 - 69	1 - 3	10	0 - 40	0 - 2				10	0 - 63	0 - 3
other shrubs	2SHRUB	10	0 - 69	0 - 3	10	0 - 60	0 - 3	10	30 - 150	2 - 10	10	0 - 63	0 - 3
TREES		*11*			*11*			*11*			*11*		
eastern redcedar	JUVI												

Annual Production lbs./acre	LOW RV HIGH	LOW RV HIGH	LOW RV HIGH	LOW RV HIGH
GRASSES & GRASS-LIKES	1625 · 1978 - 2500	1310 · 1650 - 2170	710 · 1050 - 1270	1520 · 1953 - 2580
FORBS	110 · 173 - 250	95 · 200 - 325	145 · 263 - 400	40 · 74 - 110
SHRUBS	65 · 150 - 250	95 · 150 - 205	145 · 188 - 230	40 · 74 - 110
TREES				
TOTAL	1800 · 2300 - 3000	1500 · 2000 - 2700	1000 · 1500 - 1900	1600 · 2100 - 2800

This list of plants and their relative proportions are based on near normal years. Fluctuations in species composition and relative production may change from year to year dependent upon precipitation or other climatic factors. RV = Representative value.

Plant Community Composition and Group Annual Production

		Bluestem/Prairie Sandreed/Needlegrass			Grama/Sedge Sod			Annual/Pioneer Perennial			Eastern Redcedar		
COMMON/GROUP NAME	**SYMBOL**	**Grp**	**lbs./acre**	**% Comp**	**Grp**	**lbs./acre**	**% Comp**	**Grp**	**lbs./acre**	**% Comp**	**Grp**	**lbs./acre**	**% Comp**
GRASSES & GRASS-LIKES			*1840 - 2070*	*80 - 90*		*560 - 630*	*80 - 90*		*150 - 350*	*30 - 70*		*600 - 840*	*50 - 70*
sand bluestem	ANHA	1	460 - 920	20 - 40	1			1			1	60 - 180	5 - 15
prairie sandreed	CALO	2	345 - 805	15 - 35	2	0 - 21	0 - 3	2	25 - 50	5 - 10	2	120 - 300	10 - 25
little bluestem	SCSC	3	345 - 575	15 - 25	3			3			3	120 - 300	10 - 25
NEEDLEGRASS		**4**	**115 - 345**	**5 - 15**	**4**	**0 - 21**	**0 - 3**	**4**			**4**	**180 - 300**	**15 - 25**
needleandthread	HECOC8	4	115 - 345	5 - 15	4	0 - 21	0 - 3				4	120 - 240	10 - 20
porcupine grass	HESP11	4	0 - 115	0 - 5							4	60 - 120	5 - 10
GRAMA		**5**	**115 - 230**	**5 - 10**	**5**	**105 - 280**	**15 - 40**	**5**			**5**	**60 - 180**	**5 - 15**
blue grama	BOGR2	5	115 - 230	5 - 10	5	105 - 245	15 - 35				5	60 - 120	5 - 10
hairy grama	BOHI2	5	115 - 230	5 - 10	5	14 - 56	2 - 8				5	24 - 60	2 - 5
OTHER WARM-SEASON		**6**	**115 - 345**	**5 - 15**	**6**	**35 - 140**	**5 - 20**	**6**	**75 - 175**	**15 - 35**	**6**	**60 - 240**	**5 - 20**
switchgrass	PAVI2	6	115 - 230	5 - 10							6	0 - 36	0 - 3
Indiangrass	SONU2	6	0 - 115	0 - 5									
sand dropseed	SPCR	6	0 - 115	0 - 5	6	35 - 105	5 - 15				6	60 - 120	5 - 10
sand paspalum	PASE5	6	0 - 46	0 - 2	6	0 - 14	0 - 2	6	0 - 15	0 - 3	6	0 - 12	0 - 1
sand lovegrass	ERTR3	6	23 - 115	1 - 5							6	0 - 36	0 - 3
purple lovegrass	ERSP										6	0 - 36	0 - 3
sandhill muhly	MUPU2							6	25 - 50	5 - 10	6	0 - 60	0 - 5
blowout grass	REFL							6	0 - 15	0 - 3			
threeawn	ARIST				6	7 - 35	1 - 5	6	10 - 50	2 - 10	6	0 - 24	0 - 2
sandbur	CELO3							6	50 - 75	10 - 15			
NATIVE GRASS/GRASS-LIKES		**7**	**46 - 184**	**2 - 8**	**7**	**35 - 70**	**5 - 10**	**7**	**0 - 10**	**0 - 2**	**7**	**60 - 180**	**5 - 15**
Indian ricegrass	ACHY	7	0 - 46	0 - 2							7	0 - 24	0 - 2
prairie junegrass	KOMA	7	23 - 115	1 - 5	7	0 - 7	0 - 1				7	12 - 48	1 - 4
Scribner panicum	DIOLS	7	0 - 46	0 - 2				7	0 - 10	0 - 2	7	0 - 36	0 - 3
sedge	CAREX	7	23 - 115	1 - 5	7	35 - 70	5 - 10				7	12 - 60	1 - 5
other perennial grasses	2GP	7	0 - 46	0 - 2	7	0 - 14	0 - 2				7	12 - 60	1 - 5
NON-NATIVE GRASSES		**8**			**8**	**0 - 35**	**0 - 5**	**8**	**0 - 100**	**0 - 20**	**8**	**0 - 60**	**0 - 5**
cheatgrass	BRTE				8	0 - 14	0 - 2	8	0 - 100	0 - 20	8	0 - 36	0 - 3
bluegrass	POA				8	0 - 35	0 - 5				8	0 - 60	0 - 5
FORBS		*9*	*115 - 230*	*5 - 10*	*9*	*14 - 70*	*2 - 10*	*9*	*75 - 250*	*15 - 50*	*9*	*60 - 120*	*5 - 10*
annual sunflower	HEAN3							9	25 - 100	5 - 20			
gayfeather	LIATR	9	0 - 46	0 - 2	9	0 - 7	0 - 1				9	0 - 12	0 - 1
green sagewort	ARDR4	9	0 - 46	0 - 2	9	0 - 35	0 - 5				9	12 - 36	1 - 3
heath aster	SYER	9	0 - 23	0 - 1	9	0 - 14	0 - 2				9	0 - 24	0 - 2
Missouri goldenrod	SOMI2	9	0 - 46	0 - 2	9	0 - 7	0 - 1				9	0 - 12	0 - 1
prairie coneflower	RACO3	9	0 - 23	0 - 1							9	0 - 24	0 - 2
purple prairie clover	DAPU5	9	0 - 23	0 - 1							9	0 - 12	0 - 1
Rocky Mountain beeplant	CLSE							9	5 - 25	1 - 5			
rush skeletonweed	LYJU	9	0 - 23	0 - 1	9	0 - 7	0 - 1				9	0 - 24	0 - 2
scurfpea	PSORA2	9	0 - 23	0 - 1	9	0 - 14	0 - 2				9	0 - 24	0 - 2
spiderwort	TRADE	9	0 - 23	0 - 1									
spiny phlox	PHHO	9	0 - 23	0 - 1	9	0 - 7	0 - 1				9	0 - 24	0 - 2
stiff sunflower	HEPA19	9	0 - 46	0 - 2							9	0 - 12	0 - 1
verbena	VERBE				9	0 - 14	0 - 2	9	0 - 10	0 - 2			
western ragweed	AMPS	9	0 - 23	0 - 1	9	0 - 35	0 - 5	9	25 - 50	5 - 10	9	0 - 36	0 - 3
other perennial forbs	2FP	9	0 - 46	0 - 2	9	0 - 35	0 - 5	9	0 - 25	0 - 5	9	0 - 60	0 - 5
other annual forbs	2FA				9	0 - 21	0 - 3	9	75 - 175	15 - 35	9	0 - 24	0 - 2
SHRUBS		*10*	*69 - 230*	*3 - 10*	*10*	*7 - 49*	*1 - 7*	*10*	*10 - 25*	*2 - 5*	*10*	*24 - 120*	*2 - 10*
cactus	OPUNT	10	0 - 23	0 - 1	10	7 - 35	1 - 5				10	0 - 24	0 - 2
leadplant	AMCA6	10	23 - 69	1 - 3							10	0 - 24	0 - 2
rose	ROSA5	10	23 - 69	1 - 3	10	0 - 21	0 - 3	10	5 - 15	1 - 3	10	12 - 60	1 - 5
small soapweed	YUGL	10	0 - 23	0 - 1	10	0 - 14	0 - 2				10	0 - 24	0 - 2
western sandcherry	PRPUB	10	23 - 69	1 - 3							10	0 - 12	0 - 1
other shrubs	2SHRUB	10	0 - 69	0 - 3	10	0 - 7	0 - 1	10	5 - 15	1 - 3	10	0 - 60	0 - 5
TREES		*11*			*11*			*11*			*11*	*120 - 240*	*10 - 20*
eastern redcedar	JUVI										11	120 - 240	10 - 20

Annual Production lbs./acre	LOW RV HIGH	LOW RV HIGH	LOW RV HIGH	LOW RV HIGH
GRASSES & GRASS-LIKES	1625 · 1978 - 2500	385 · 630 - 775	75 · 320 - 995	510 · 858 - 1100
FORBS	110 · 173 - 250	10 · 42 - 75	70 · 163 - 275	55 · 90 - 125
SHRUBS	65 · 150 - 250	5 · 28 - 50	5 · 18 - 30	20 · 72 - 125
TREES				115 · 180 - 250
TOTAL	1800 · 2300 - 3000	400 · 700 - 900	150 · 500 - 1300	700 · 1200 - 1600

This list of plants and their relative proportions are based on near normal years. Fluctuations in species composition and relative production may change from year to year dependent upon precipitation or other climatic factors. RV = Representative value.

Plant Community and Vegetation State Narratives

Following are the narratives for each of the described plant communities. These plant communities may not represent every possibility, but they are the most prevalent and repeatable plant communities. The plant composition tables shown above have been developed from the best available knowledge at the time of this revision. As more data are collected, some of these plant communities may be revised or removed, and new ones may be added. None of these plant communities should necessarily be thought of as "Desired Plant Communities". According to the USDA NRCS National Range and Pasture Handbook, Desired Plant Communities (DPC's) will be determined by the decision-makers and will meet minimum quality criteria established by the NRCS. The main purpose for including any description of a plant community here is to capture the current knowledge and experience at the time of this revision.

Bluestem/Prairie Sandreed/Needlegrass Plant Community

Interpretations are primarily based on the Bluestem/Prairie Sandreed/Needlegrass Plant Community. This site evolved with grazing by large herbivores and is well suited for grazing by domestic livestock. This plant community can be found on areas that are properly managed with grazing and/or prescribed burning, and sometimes on areas receiving occasional periods of rest.

This plant community consists chiefly of tall and mid warm season grasses. Principle dominants are sand bluestem, prairie sandreed, and little bluestem. Grasses of secondary importance are needleandthread, switchgrass, sand dropseed, and hairy or blue grama. Sedges occur in the understory. Forbs and shrubs such as gayfeather, stiff sunflower, leadplant, rose and sandcherry are significant. This plant community is about 80% grasses, 10% forbs, and 10% shrubs by weight.

This plant community is extremely resilient and well adapted to the Northern Great Plains climatic conditions. This is a healthy and sustainable plant community (site/soil stability, watershed function, and biologic integrity). Plant litter is properly distributed with some movement off-site and natural plant mortality is low. The diversity in plant species allows for high drought tolerance. Moderate or high available water capacity provides a favorable soil-water-plant relationship.

The following growth curve shows the estimated monthly percentages of total annual growth of the dominant species expected during a normal year:
Growth curve number: NE6637
Growth curve name: Eroded Tableland, warm-season dominant, cool-season sub-dominant.
Growth curve description: Warm-season dominant, cool-season sub-dominant.

JAN	FEB	MAR	APR	MAY	JUN	JUL	AUG	SEP	OCT	NOV	DEC
0	0	5	8	15	24	23	15	5	5	0	0

Transitional pathways and/or community pathways leading to other plant communities are as follows:

- Heavy grazing and/or improper rest periods will convert this plant community to the *Bluestem/Prairie Sandreed Plant Community*. Continuous heavy grazing tends to accelerate this movement.
- Non-use and no fire will convert this plant community to the *Excessive Litter Plant Community*.

Bluestem/Prairie Sandreed Plant Community

Plants resistant to grazing are maintaining themselves in this plant community which developed under grazing by domestic livestock. Most of the palatable plants from the Bluestem/Prairie Sandreed/Needlegrass Plant Community are present but occur in lesser amounts. Warm season grasses still comprise a significant component of this plant community.

The potential vegetation is about 75% grasses or grass-like plants, 15% forbs, and 10% shrubs. Dominant grasses include sand bluestem, little bluestem and prairie sandreed. Grasses of secondary importance include blue or hairy grama, switchgrass, sand dropseed and Scribner's panicum. Forbs commonly found in this plant community include gayfeather, stiff sunflower, heath aster and goldenrod. Indiangrass is no longer present and sand bluestem and perennial forbs are present in lesser amounts.

Strong healthy root systems allow production on this plant community to increase with favorable precipitation. This plant community contributes to optimum soil health. This plant community is drought resistant due to its tall and mid grass diversity which allows for summer months growth. These warm-season grasses cure well for winter forage stockpiling. This plant community has slightly less litter than the Bluestem/Prairie Sandreed/Needlegrass Plant Community. This plant community is somewhat resistant to change; however, either improved management or increased disturbance can move the plant community. The resiliency of this plant community is dependent on the type of management system implemented, and the intensity and duration of the disturbance.

The following growth curve shows the estimated monthly percentages of total annual growth of the dominant species expected during a normal year:
Growth curve number: NE6637
Growth curve name: Eroded Tableland, warm-season dominant, cool-season sub-dominant.
Growth curve description: Warm-season dominant, cool-season sub-dominant.

JAN	FEB	MAR	APR	MAY	JUN	JUL	AUG	SEP	OCT	NOV	DEC
0	0	5	8	15	24	23	15	5	5	0	0

Transitional pathways and/or community pathways leading to other plant communities are as follows:

- Prescribed grazing or prescribed grazing with periodic fire will convert the plant community to the *Bluestem/Prairie Sandreed/Needlegrass Plant Community*. The probability of this occurring is high.
- Heavy grazing (usually including improper rest periods) or excessive disturbance (e.g., defoliation by rodents) can convert this plant community to the *Prairie Sandreed/Ragweed Plant Community*. Continuous heavy grazing tends to accelerate this movement to the *Prairie Sandreed/Ragweed Plant Community*.
- Non-use and no fire will convert this plant community to the *Excessive Litter Plant Community*.

Prairie Sandreed/Ragweed Plant Community

This plant community occurs under historic heavy grazing with continued seasonal grazing starting early in the growing season. The plant community is a mix of warm season and short cool season grasses, with an increase of forbs and shrubs. The percent ground cover and plant density increases from the Bluestem/Prairie Sandreed/Needlegrass Plant Community due to considerable encroachment by the sod-forming bluegrasses.

The potential vegetation is about 60% grasses or grass-like plants, 25% forbs, and 15% shrubs. The dominant grasses include prairie sandreed, bluegrass, and sand dropseed. Other grasses present include blue or hairy grama and Scribner's panicum. Major forbs include western ragweed, with lesser amounts of green sagewort and gayfeather. The dominant shrubs often include rose, plum and snowberry. There can be an increase in shrubs, especially snowberry and plum. There is a significant increase in cool-season plants such as ragweed and bluegrass. With the exception of an increase in prairie sandreed, a decrease can occurs in the mid and tall warm-season grasses such as sand bluestem, switchgrass, little bluestem.

The soil surface has remained intact. Compared to the Bluestem/Prairie Sandreed/Needlegrass Plant Community, the total annual production is reduced by 25-35%, and plant diversity and amount of litter is lower. This plant community is considered stable, but is at risk if a major shift in climatic conditions or overgrazing occurs. The resiliency of this plant community is moderate depending on the intensity and duration of disturbance. Infiltration and runoff are not greatly affected because of the sandy nature of the soil.

The following growth curve shows the estimated monthly percentages of total annual growth of the dominant species expected during a normal year:
Growth curve number: NE6636
Growth curve name: Eroded Tableland, cool-season/warm-season co-dominant.
Growth curve description: Cool-season, warm-season co-dominant.

JAN	FEB	MAR	APR	MAY	JUN	JUL	AUG	SEP	OCT	NOV	DEC
0	0	5	10	20	25	20	10	5	5	0	0

Transitional pathways and/or community pathways leading to other plant communities are as follows:

- Prescribed grazing can convert the plant community to the *Bluestem/Prairie Sandreed Plant Community*.
- Heavy grazing and improper rest periods can convert this plant community to the *Grama/Sedge Sod Plant Community*. Continuous heavy grazing tends to accelerate this movement.

Excessive Litter Plant Community

This plant community occurs after an extended period (10-30 years) of non-use by domestic livestock (periodic fire may extend the amount of time it will take to reach this plant community). Livestock grazing and fire has been eliminated. Litter amount has clearly increased and few or no sedges or understory plants (shortgrass) are present. There is reduced plant basal cover which is replaced by litter. Bunch grass plants tend to colonize by individual species and are very mature. These mature plants tend to have dead centers, and pedestalling is usually evident. These plants have very few tillers for vegetative reproduction.

The potential vegetation is about 90% grasses or grass-like plants, 5% forbs, and 5% shrubs. The dominant grasses include sand bluestem, prairie sandreed, little bluestem and needlegrasses. Other grasses present include sand dropseed, switchgrass and prairie junegrass. The dominant forbs include western ragweed and green sagewort, with less dominant forbs including gayfeather and spiny phlox. The shrubs present on this plant community include rose, leadplant and western sandcherry. Plant diversity has decreased and native plants tend to occur in individual colonies. This plant community has a high amount of litter covering the soil between widely dispersed mature plants.

This plant community will change rapidly if plant manipulation is allowed to occur (grazing by domestic livestock or periodic fire). Soil erosion is low, and infiltration and runoff are not significantly different than the Bluestem/Prairie Sandreed/Needlegrass Plant Community.

The following growth curve shows the estimated monthly percentages of total annual growth of the dominant species expected during a normal year:
Growth curve number: NE6637
Growth curve name: Eroded Tableland, warm-season dominant, cool-season sub-dominant.
Growth curve description: Warm-season dominant, cool-season sub-dominant.

JAN	FEB	MAR	APR	MAY	JUN	JUL	AUG	SEP	OCT	NOV	DEC
0	0	5	8	15	24	23	15	5	5	0	0

Transitional pathways and/or community pathways leading to other plant communities are as follows:

- Prescribed grazing will convert the plant community to the *Bluestem/Prairie Sandreed/Needlegrass Plant Community*. Depending on the length of time non-use occurred and the composition of the plant species prior to removal of use and/or fire, these practices will move this plant community to the *Bluestem/Prairie Sandreed/Needlegrass Plant Community* or the *Bluestem/Prairie Sandreed Plant Community*.
- Heavy grazing (usually including improper rest periods) will convert this plant community to the *Prairie Sandreed/Ragweed Plant Community*. This change will be accelerated if coupled with several years of below average precipitation.

Grama/Sedge Sod Plant Community

This plant community occurs under heavy grazing and inadequate recovery periods. This may occur where too little time is allowed before areas are re-grazed, or in large pastures where animals graze individual plants repeatedly. It is made up of warm-season short grasses, and cool-season grasses and grass-likes. The dominant grass is blue grama. Other grasses or grass-likes include hairy grama, sedges, sand dropseed, prairie sandreed and needleandthread. The dominant forbs include western ragweed and annual sunflower. The dominant shrubs include rose and cactus. Compared to the Bluestem/Prairie Sandreed/Needlegrass Plant Community, blue grama, hairy grama, sedges, ragweed and rose have increased, while prairie sandreed, sand bluestem and switchgrass have decreased. The plant diversity has decreased from that of the Bluestem/Prairie Sandreed/Needlegrass Plant Community.

This plant community is resistant to change due to a lower percentage of bare ground. Under disturbance, this plant community is also highly resilient. The soil erosion is low. The water cycle is impaired because of the high density of short-rooted grasses which decreases infiltration.

The following growth curve shows the estimated monthly percentages of total annual growth of the dominant species expected during a normal year:
Growth curve number: NE6638
Growth curve name: Eroded Tableland, warm-season dominant.
Growth curve description: Warm-season dominant.

JAN	FEB	MAR	APR	MAY	JUN	JUL	AUG	SEP	OCT	NOV	DEC
0	0	3	7	15	20	30	15	5	5	0	0

Transitional pathways and/or community pathways leading to other plant communities are as follows:

- With long-term prescribed grazing, including adequate recovery periods, this plant community will move through the successional stages leading to the *Bluestem/Prairie Sandreed/Needlegrass Plant Community*. This change will require a long period of time, and may be difficult to attain if the grama sod is extensive.

Annual/Pioneer Perennial Plant Community

As succession progresses, sandhill muhly, blowout grass and sand bluestem begin to colonize. Sandbur, lemon scurfpea and annual sunflower begin to come in with prairie sandreed, hairy grama, and rose slowly becoming evident on this plant community.

The following growth curve shows the estimated monthly percentages of total annual growth of the dominant species expected during a normal year:
Growth curve number: NE6634
Growth curve name: Eroded Tableland, cool-season dominant.
Growth curve description: Cool-season dominant.

JAN	FEB	MAR	APR	MAY	JUN	JUL	AUG	SEP	OCT	NOV	DEC
0	0	5	15	28	30	10	2	5	5	0	0

Transitional pathways and/or community pathways leading to other plant communities are as follows:

- Under long-term prescribed grazing (10+ years), including adequate rest periods, succession will progress leading to the *Bluestem/Prairie Sandreed/Needlegrass Plant Community*. The slope, aspect, size and relative abundance of perennial plants will influence the rate that change will occur.

Eastern Redcedar Plant Community

This plant community can develop whenever eastern redcedar is adjacent to the originating plant community, and encroachment occurs. This can occur in areas adjacent to a seed source, such as near windbreaks or adjacent to ponderosa pine woodlands. With prescribed burning, encroachment can be controlled. This plant community has a canopy cover of 15% or more mature trees. Total tree canopy cover can exceed 40%. The herbaceous component decreases proportionately in relation to the increase in canopy cover.

This plant community is resistant to change. In higher canopy cover situations, the soil erosion will increase. The water cycle is also significantly altered under higher canopy cover. Infiltration is reduced because of interception of rainfall by the canopy. Runoff is not greatly increased, as the soil is still capable of absorbing the rainfall that reaches the soil surface.

The following growth curve shows the estimated monthly percentages of total annual growth of the dominant species expected during a normal year:
Growth curve number: NE6644
Growth curve name: Eroded Tableland, heavy conifer canopy.
Growth curve description: Mature eastern redcedar overstory.

JAN	FEB	MAR	APR	MAY	JUN	JUL	AUG	SEP	OCT	NOV	DEC
1	3	7	10	20	28	15	5	4	4	2	1

Transitional pathways and/or community pathways leading to other plant communities are as follows:

- With brush management, or prescribed burning, followed by prescribed grazing, succession will progress leading to the *Bluestem/Prairie Sandreed/Needlegrass Plant Community*.

Active Blowout Plant Community

This plant community can be reached from any other plant community with significant disturbances such as heavy grazing, and repeated wildfire. Large areas of blowing sand result in movement and possible enlargement of the blowout. Evaporation and transpiration of existing plants are extremely high due to bare ground, lack of litter, fire, and few plants. This plant community is in a low successional stage from poor soil development, fire occurrence and sporadic herbivore use. Sandhill muhly and blowout grass are present due to their drought tolerance.

The following growth curve shows the estimated monthly percentages of total annual growth of the dominant species expected during a normal year:
Growth curve number: NE6638
Growth curve name: Eroded Tableland, warm-season dominant.
Growth curve description: Warm-season dominant.

JAN	FEB	MAR	APR	MAY	JUN	JUL	AUG	SEP	OCT	NOV	DEC
0	0	3	7	15	20	30	15	5	5	0	0

Transitional pathways and/or community pathways leading to other plant communities are as follows:

- With prescribed grazing, this plant community may move to the *Annual/Pioneer Perennial Plant Community*. Establishment of vegetation may be accelerated with concentrated short-term animal impact (such as feeding hay on the blowout), followed by broadcast seeding of a temporary cover crop prior to removal of animal impact.

Go-back Land Plant Community

This plant community can be reached whenever severe mechanical disturbance occurs (e.g., abandoned farmland). The vegetation on this plant community varies greatly, sometimes being dominated by little bluestem, threeawn, sand dropseed, prairie sandreed, marestail, annual sunflower, green sagewort, and/or ragweed. Other plants that occur on this plant community include rose, yucca, sand bluestem, switchgrass, and needleandthread. Compared to the Bluestem/Prairie Sandreed/Needlegrass Plant Community, warm-season natives have decreased. Annual forbs and grasses have become established in the plant community.

This plant community may not return to a higher successional plant community because of the long-term effects of the soil disturbance by tillage equipment. This plant community is variable in its resistance to change depending on past management practices. Soil erosion is typically evident in low successional stages. The water cycle is not greatly affected.

Many of the areas seeded prior to the 1960's are now dominated by little bluestem.

Ecological Site Interpretations

Animal Community – Wildlife Interpretations

-- Under Development --

Bluestem/Prairie Sandreed/Needlegrass Plant Community:

Bluestem/Prairie Sandreed Plant Community:

Prairie Sandreed/Ragweed Plant Community:

Excessive Litter Plant Community:

Grama/Sedge Sod Plant Community:

Annual/Pioneer Perennial Plant Community:

Active Blowout Plant Community:

Eastern Redcedar Plant Community:

Animal Preferences (Quarterly – 1,2,3,4†)

Common Name	Cattle	Sheep	Horses	Deer	Antelope	Bison	Elk
Grasses & Grass-likes							
blue grama	U D P U	D P P D	U D P U	D P P D	D P P D	U D P U	U D P U
hairy grama	U D P U	D P P D	U D P U	D P P D	D P P D	U D P U	U D P U
Indian ricegrass	D P U D	N P N D	D P U D	N P N D	N P N D	D P U D	D P U D
Indiangrass	U D P D	U D U U	U D P D	U D U U	U D U U	U D P D	U D P D
little bluestem	U D D U	N D N N	U D D U	N D N N	N D N N	U D D U	U D D U
needleandthread	U D U D	N D N U	U D U D	N D N U	N D N U	U D U D	U D U D
porcupine grass	U P U D	N D N U	U P U D	N D N U	N D N U	U P U D	U P U D
prairie junegrass	U D U D	N D N U	U D U D	N D N U	N D N U	U D U D	U D U D
prairie sandreed	U D D U	U D U U	U D D U	U U D U	U U D U	U D D U	U D D U
sand bluestem	U D P D	U D U U	U D P D	U D U U	U D U U	U D P D	U D P D
sand dropseed	N U N N	N U N N	N U N N	N U N N	N U N N	N U N N	N U N N
sand lovegrass	U D D U	N N N N	U D D U	N N N N	N N N N	U D D U	U D D U
sand paspalum	N U U N	N U N N	N U U N	N U N N	N U N N	N U U N	N U U N
Scribner panicum	U U D U	N U N N	U U D U	N U N N	N U N N	U U D U	U U D U
sedge	U D U D	U P N D	U D U D	U D U D	U D U D	U D U D	U D U D
switchgrass	U D D U	U D U U	U D D U	N N N N	N N N N	U D D U	U D D U
Forbs							
gayfeather	U U D U	U P P U	U U D U	U P P U	U P P U	U U D U	U P P U
green sagewort	U U U U	U U U U	U U U U	U U U U	U U U U	U U U U	U U U U
heath aster	U U D U	U U P U	U U D U	U U P U	U U P U	U U D U	U U P U
Missouri goldenrod	U U D U	N U U N	U U D U	N U U N	N U U N	U U D U	N U U N
prairie coneflower	U U D U	U P P U	U U D U	U P P U	U P P U	U U D U	U P P U
purple prairie clover	U D P U	U P P U	U D P U	U P P U	U P P U	U D P U	U P P U
rush skeletonweed	U U U U	N N N N	U U U U	N N N N	N N N N	U U U U	N N N N
scurfpea	U U U U	N U U N	U U U U	N U U N	N U U N	U U U U	N U U N
spiderwort	U U U U	N N N N	U U U U	N N N N	N N N N	U U U U	N N N N
spiny phlox	U D U U	U P P U	U D U U	U P P U	U P P U	U D U U	U P P U
stiff sunflower	U D P U	U D P U	U D P U	U D P U	U D P U	U D P U	U D P U
western ragweed	U U U U	N N N N	U U U U	N N N N	N N N N	U U U U	N N N N
Shrubs							
cactus	N N N N	N N N N	N N N N	N N N N	N N N N	N N N N	N N N N
leadplant	U P D U	U P D U	U P D U	U P D U	U P D U	U P D U	U P D U
rose	U D D U	U D D U	U D D U	U D D U	U D D U	U D D U	U D D U
small soapweed	D N N D	D U U D	D N N D	D U U D	D U U D	D N N D	D U U D
western sandcherry	D P P D	D U U D	D P P D	P U D P	D U U D	D P P D	P U U P

N = not used; **U** = undesirable; **D** = desirable; **P** = preferred; **T** = toxic

† Quarters: 1 – Jan., Feb., Mar.; 2 – Apr., May, Jun.; 3 – Jul., Aug., Sep.; 4 – Oct., Nov., Dec.

Animal Community – Grazing Interpretations

The following table lists annual, suggested initial stocking rates with average growing conditions. These are conservative estimates that should be used only as guidelines in the initial stages of conservation planning. Often, the current plant composition does not entirely match any particular plant community (as described in this ecological site description). Because of this a resource inventory is necessary to document plant composition and production. More accurate carrying capacity estimates should eventually be calculated using the following stocking rate information along with animal preference data and actual stocking records, particularly when grazers other than cattle are involved. With consultation of the land manager, more intensive grazing management may result in improved harvest efficiencies and increased carrying capacity.

Plant Community	Average Annual Production (lbs./acre, air-dry)	Stocking Rate* (AUM/acre)
Bluestem/Prairie Sandreed/Needlegrass	2300	0.73
Bluestem/Prairie Sandreed	2000	0.63
Prairie Sandreed/Ragweed	1500	0.47
Excessive Litter	2100	0.66
Grama/Sedge Sod	700	0.22
Annual/Pioneer Perennial	500	**
Eastern Redcedar	1200	**

* Based on 790 lbs./acre (air-dry weight) per Animal Unit Month (AUM), and on 25% harvest efficiency (refer to USDA NRCS, National Range and Pasture Handbook).
** Highly variable; stocking rate needs to be determined on site.

Grazing by domestic livestock is one of the major income-producing industries in the area. Rangeland in this area may provide yearlong forage. During the dormant period, the forage for livestock will likely be lacking protein to meet livestock requirements, and added protein will allow ruminants to better utilize the energy stored in grazed plant materials. A forage quality test (either directly or through fecal sampling) should be used to determine the level of supplementation needed.

Hydrology Functions

Water is the principal factor limiting forage production on this site. Normal rainfall is 17-22 inches per year. Valentine soils on this site are in Hydrologic Soil Group A (low runoff and high infiltration even when thoroughly wetted). Water transmission through Group A soils is normally greater than 0.30 inches per hour. Runoff is expected to occur only during the most intense storms (refer to Section 4, NRCS National Engineering Handbook for runoff quantities and hydrologic curves).

For the interpretive plant community, rills and gullies should not typically be present. Water flow patterns should be barely distinguishable if at all present. Pedestals are only slightly present in association with bunchgrasses such as little bluestem. Litter typically falls in place, and signs of movement are not common. Chemical and physical crusts are rare to non-existent. Cryptogamic crusts are present but only cover 1-2% of the soil surface. Overall this site has the appearance of being very stable and productive.

Recreational Uses

This site provides hunting opportunities for upland game species. The wide varieties of plants which bloom from spring until fall have an esthetic value that appeals to visitors.

Wood Products

Other Products

Seed harvest of native plant species can provide additional income on this site.

Supporting Information

Associated Sites

(066XY056NE) – Choppy Sands
(066XY046NE) – Subirrigated
(066XY032NE) – Sandy 18-22” P.Z.
(066XY062NE) – Shallow to Gravel

Similar Sites

(066XY056NE) – Choppy Sands
[steeper slope; lower production; blowout grass present; shrubs more evident]

(066XY032NE) – Sandy 18-22" P.Z.
[slope not as steep; higher production; prairie sandreed dominant]

Inventory Data References

Information presented here has been derived from NRCS clipping data and other inventory data. A Field observation from range trained personnel was also used. Those involved in developing this site include: Wayne Bachman, Soil Scientist, NRCS; Stan Boltz, Range Management Specialist, NRCS; Anna Ferguson, Soil Conservationist, NRCS; Roger Hammer, Soil Scientist, NRCS; Dana Larsen, Range Management Specialist, NRCS; Dave Schmidt, Rangeland Management Specialist, NRCS; Kim Stine, Rangeland Management Specialist, NRCS.

Data Source	Number of Records	Sample Period	State	County
SCS-RANGE-417				

State Correlation

This site has been correlated with South Dakota in MLRA 66.

Field Offices	Counties	Field Offices	Counties
Ainsworth, NE	Brown, Keya Paha & Rock	White River, SD	Mellette, Todd
Martin, SD	Bennett & Shannon	Winner, SD	Tripp
Valentine, NE	Cherry		

Relationship to Other Established Classifications

Level IV Ecoregions of the Conterminous United States: 43i – Keya Paha Tablelands.

Other References

High Plains Regional Climate Center, University of Nebraska, 830728 Chase Hall, Lincoln, NE 68583-0728. (http://hpccsun.unl.edu)

USDA, NRCS. National Water and Climate Center, 101 SW Main, Suite 1600, Portland, OR 97204-3224. (http://wcc.nrcs.usda.gov)

USDA, NRCS. National Range and Pasture Handbook, September 1997

USDA, NRCS. National Soil Information System, Information Technology Center, 2150 Centre Avenue, Building A, Fort Collins, CO 80526. (http://nasis.nrcs.usda.gov)

USDA, NRCS, 2002. National Soil Survey Handbook, title 430-VI. (http://soils.usda.gov/procedures/handbook/main.htm)

Site Description Approval

NE, State Range Management Specialist	Date	SD, State Range Management Specialist	Date