Design Assumptions for
Nebraska Base Drawings NE200-20-001 thru NE200-20-010
Reinforced Concrete Wall Drawings

New drawings: 7/04 Replaces drawings: 5007-0 thru 5007-9

Reinforced Concrete Wall Drawings – Design Assumptions for all

Refer to the notes and general design notes on the drawings for limitations on usage.

Class 4000/4000M concrete is required.
Use PL-46 construction specification 31 or 32.
If wall is backfilled, a floor slab is required.
Water table must be below footing elevation.

CLICK ON BLUE AREAS ON DRAWINGS TO ENTER DATA

PRESS TO GO TO TITLE BLOCK INFORMATION FILL IN PAGE

Concrete Wall Drawings
Design Loading Chart

Nebraska Drawing Number	Iowa & Wisconsin Drawing Number		Wall Height	Wall Width	Backfill Height		Surcharge		Type of Wall "T" or "L"
					Condition A	Condition B	Condition A	Condition B	
NE200-20-001	IA-910	WI-511							
CHOOSE THIS	(Plan 1)		1'	6"	0'-1'		100 psf		"L"
	(Plan 2)		1'	6"	0'-1'		None		"L"
NE200-20-002	IA-911	WI-512							
CHOOSE THIS	(Plan 1)		2'	6"	0'-2'		100 psf		"L"
	(Plan 2)		2'	6"	0'-2'		None		"L"
NE200-20-003	IA-912	WI-512B							
CHOOSE THIS	(Plan 1)		2'	8"	0'-2'		100 psf		"L"
	(Plan 2)		2'	8"	0'-2'		None		"L"
NE200-20-004 CHOOSE THIS	IA-913	WI-505B	4'	8"	2'-4'	2'-3'-2"	None	100 psf	"L"
NE200-20-005 CHOOSE THIS	IA-914	WI-505A	4'	8"	0'-4'		100 psf		"L"
NE200-20-006 CHOOSE THIS	IA-915	WI-510	4'	8"	2'-4'		No Pushoff Ramp	Pushoff Ramp	"T"
NE200-20-007	IA-916	WI-513							
CHOOSE THIS	(Plan 1)		3'	6"	0'-3'		100 psf		"L"
	(Plan 2)		3'	6"	0'-3'		None		"L"
NE200-20-008	IA-917	WI-513B							
CHOOSE THIS	(Plan 1)		3'	8"	0'-3'		100 psf		"L"
	(Plan 2)		3'	8"	0'-3'		None		"L"
NE200-20-009 CHOOSE THIS	IA-918	WI-531	5'	8"	3'-5'		No Pushoff Ramp	Pushoff Ramp	"T"
NE200-20-010 CHOOSE THIS	IA-919	WI-530	5'	8"	3'-5'				"T"

CLEAR ALL DATA

CLICK BUTTON TO CLEAR ALL DATA ENTRY FIELDS FROM ALL PAGES

PRINT THIS PAGE

AFTER CLICKING PRINT BUTTON CHANGE PRINT RANGE OPTION TO CURRENT PAGE TO PRINT THIS PAGE ONLY

Fill in the following data fields to automatically fill in the title block fields on the drawings.

Title block

Title line(s)

Subtitle line

County, State

Sheet number of

Who / When

	Who (initials)	When (MM/DD/YY)
Designed		
Drawn		
Checked		

CLEAR ALL DATA

CLICK BUTTON TO CLEAR ALL DATA ENTRY FIELDS FROM ALL PAGES

NOTES:
1. STANDARDIZED DESIGN: MUST BE ADAPTED TO SPECIFIC SITE.

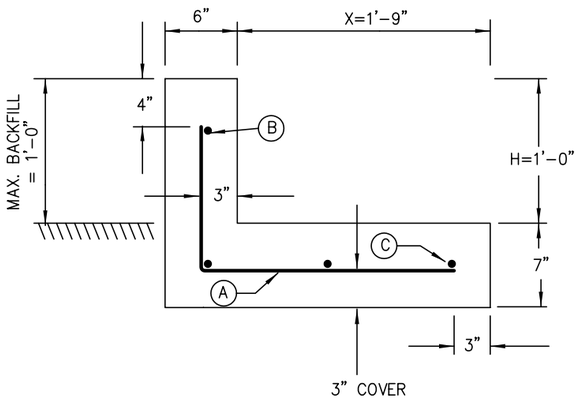

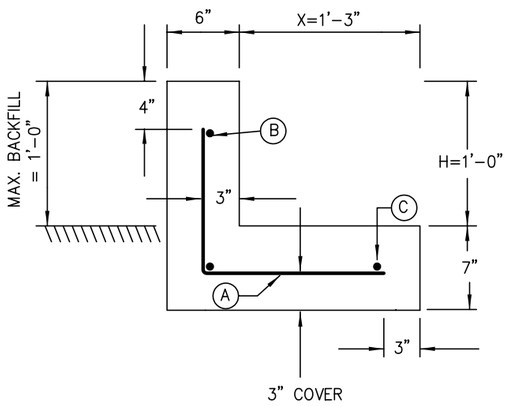

PLAN 1

SURCHARGE = 100 psf

CONDITIONS OF USE:	DESIGN VALUES:
BACKFILL=0 TO 1 FOOT	MANURE=60 psf/ft EFP EARTH=60 psf/ft EFP

MARK A	MARK B	MARK C	MARK L
#4 @ 12" a=1'-0" b=1'-9" L=2'-9"	1-#4 @ 12"	3-#4 @ 10.5"	1-#4 @ 12"

NOTES FOR PLAN 1 AND 2

1. CONSTRUCTION JOINT OPTIONAL (SEE REVERSE SIDE)
2. RECOMMEND BACKFILL TO TOP OF WALL FOR FROST PROTECTION.
3. MINIMUM BACKFILL = 0'

PLAN 2

NO SURCHARGE

CONDITIONS OF USE:	DESIGN VALUES:
BACKFILL=0 TO 1 FOOT	MANURE=60 psf/ft EFP EARTH=75 psf/ft EFP

MARK A	MARK B	MARK C	MARK L
#4 @ 12" a=1'-0" b=1'-3" L=2'-3"	1-#4 @ 12"	2-#4 @ 15"	1-#4 @ 12"

SPLICES IN MARK B AND C BARS ARE 13" MIN.

TYPE 21 bar

#4 BARS, TOTAL LENGTH = _____ x 0.668 LBS/FT. = _____ POUNDS

MARK	SIZE	QUANTITY	TYPE	a	b	LENGTH	TOTAL LENGTH
A	#4		21	1'-0"			
B	#4		Str.	—	—		
C	#4		Str.	—	—		
L	#4		21	2'-6"	2'-6"	5'-0"	

ESTIMATED QUANTITIES

* CONCRETE (CLASS 4000/4000M) _____ CU.YDS.
REINFORCING STEEL _____ LBS OR FT.

* CONCRETE QUANTITY – 0.067 CU. YDS./FT. FOR PLAN 1
– 0.056 CU. YDS./FT. FOR PLAN 2

CORNER DETAIL (PLAN VIEW)

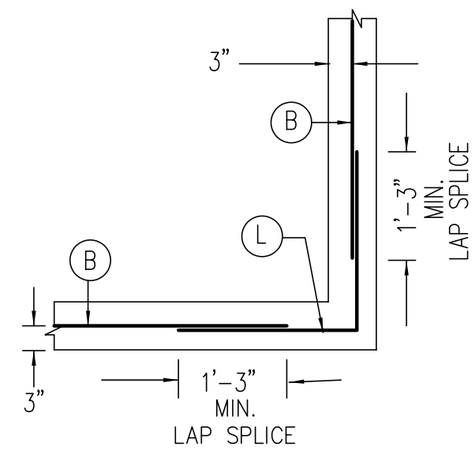

THIS DESIGN MEETS MEDIUM DESIGN LIFE (20 YEARS).

GENERAL DESIGN NOTES

DRAINAGE SHALL BE AWAY FROM THE WALL.
A MINIMUM BACKFILL IS RECOMMENDED FOR FROST PROTECTION.
BACKFILL SHALL BE SLOPED AWAY FROM THE WALL.

DESIGN STRENGTHS: (WORKING STRESS DESIGN)

CONCRETE f_c = 3500 psi STEEL f_s = 20000 psi

WALL DESIGN LOADING: (REFER TO TABLE 1 – LATERAL EARTH PRESSURE VALUES, 313 STANDARD, SECTION IV OF THE TECHNICAL GUIDE.)

MINIMUM BACKFILL HEIGHT = 0 IN. MAXIMUM BACKFILL HEIGHT = 1'-0"

MANURE LOAD INSIDE = 60 psf/ft. SOIL BACKFILL OUTSIDE LOADING = 60 psf/ft WITH 100 psf HORIZONTAL SURCHARGE OR 75 psf/ft WITH NO SURCHARGE.
BACKFILL SOIL WEIGHT – 100 pcf.

FLOOR DESIGN:

MAXIMUM FOOTING CONTACT PRESSURE IS 300 psf.
WATER TABLE MUST BE BELOW THE FOOTING ELEVATION.

WALL RESTRAINT:

WALLS MUST BE RESTRAINED WITH A FLOOR SLAB WHEN BACKFILLED.
[5" THICK SLAB ASSUMED, SAFETY FACTOR AGAINST SLIDING 1.3 MIN.]
PLAN 1 – 10 FEET MINIMUM UNRESTRAINED SLAB LENGTH.
PLAN 2 – 2 FEET MINIMUM UNRESTRAINED SLAB LENGTH.

CONSTRUCTION JOINT OPTIONS

A) IF SLAB AND WALL ARE POURED SEPARATELY, THE SLAB SURFACE MUST BE THOROUGHLY CLEANED WITH WATER AND A WIRE BRUSH. THE SURFACE OF OF THE JOINT SHALL BE KEPT MOIST FOR AT LEAST 1 HR. PRIOR TO PLACEMENT OF NEW CONCRETE.

B) THE SLAB AND WALL MAY BE POURED AT THE SAME TIME ELIMINATING THE NEED FOR A CONSTRUCTION JOINT.

PRINT THIS PAGE

AFTER CLICKING PRINT BUTTON CHANGE PRINT RANGE OPTION TO CURRENT PAGE TO PRINT THIS PAGE ONLY

Adapted from Wisconsin drawing No. WI-511 and Iowa IA-910.

Revised 7/04

1 FOOT HIGH R/C WALL
6" WALL THICKNESS

Date
Designed
Drawn
Checked
Approved

NRCS
Natural Resources Conservation Service
United States Department of Agriculture

CAD file: NE200-20-001.dwg
Drawing No.
Sheet of

Nebraska Standard Drawing
NE200-20-001 Rev. 7/04 Replaces 5007-0

NOTES:
1. STANDARDIZED DESIGN: MUST BE ADAPTED TO SPECIFIC SITE.

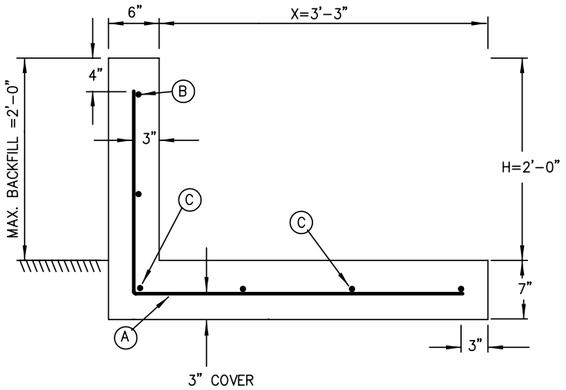

PLAN 1

SURCHARGE = 100 psf

CONDITIONS OF USE:	DESIGN VALUES:
BACKFILL=0 TO 2 FEET	MANURE=60 psf/ft EFP EARTH=60 psf/ft EFP

MARK A	MARK B	MARK C	MARK L
#4 @ 12" a=2'-0" b=3'-3" L=5'-3"	2-#4 @ 12"	4-#4 @ 13"	2-#4 @ 12"

NOTES FOR PLAN 1 AND 2

1. CONSTRUCTION JOINT OPTIONAL (SEE REVERSE SIDE)
2. RECOMMEND BACKFILL TO TOP OF WALL FOR FROST PROTECTION.
3. MINIMUM BACKFILL = 0'

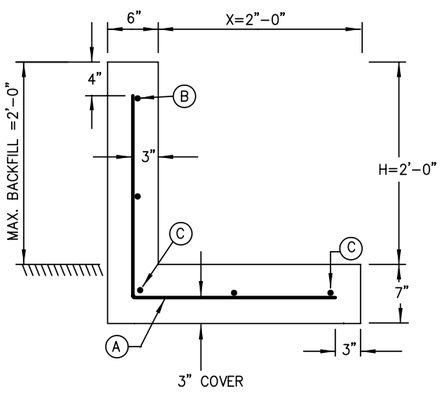

PLAN 2

NO SURCHARGE

CONDITIONS OF USE:	DESIGN VALUES:
BACKFILL=0 TO 2 FEET	MANURE=60 psf/ft EFP EARTH=75 psf/ft EFP

MARK A	MARK B	MARK C	MARK L
#4 @ 12" a=2'-0" b=2'-0" L=4'-0"	2-#4 @ 12"	3-#4 @ 12"	2-#4 @ 12"

SPLICES IN MARK B AND C BARS ARE 15" MIN.

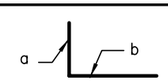

TYPE 21 bar

#4 BARS, TOTAL LENGTH = _____ x 0.668 LBS/FT. = _____ POUNDS

MARK	SIZE	QUANTITY	TYPE	a	b	LENGTH	TOTAL LENGTH
A	#4		21	2'-0"			
B	#4		Str.	—	—		
C	#4		Str.	—	—		
L	#4		21	2'-6"	2'-6"	5'-0"	

ESTIMATED QUANTITIES

* CONCRETE (CLASS 4000/4000M) _____ CU.YDS.
REINFORCING STEEL _____ LBS. OR FT.

* CONCRETE QUANTITY – 0.118 CU. YDS./FT. FOR PLAN 1
– 0.091 CU. YDS./FT. FOR PLAN 2

CORNER DETAIL (PLAN VIEW)

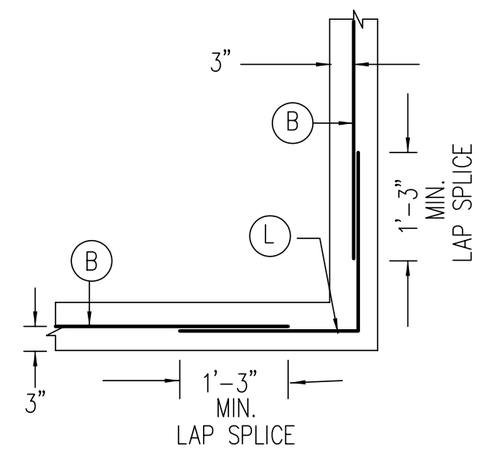

CONSTRUCTION JOINT OPTIONS

A) IF SLAB AND WALL ARE POURED SEPARATELY, THE SLAB SURFACE MUST BE THOROUGHLY CLEANED WITH WATER AND A WIRE BRUSH. THE SURFACE OF OF THE JOINT SHALL BE KEPT MOIST FOR AT LEAST 1 HR. PRIOR TO PLACEMENT OF NEW CONCRETE.

B) THE SLAB AND WALL MAY BE POURED AT THE SAME TIME ELIMINATING THE NEED FOR A CONSTRUCTION JOINT.

GENERAL DESIGN NOTES:

THIS DESIGN MEETS MEDIUM DESIGN LIFE (20 YEARS).
DRAINAGE SHALL BE AWAY FROM THE WALL.
A MINIMUM BACKFILL IS RECOMMENDED FOR FROST PROTECTION.
BACKFILL SHALL BE SLOPED AWAY FROM THE WALL.

DESIGN STRENGTHS: (WORKING STRESS DESIGN)

CONCRETE f_c = 3500 psi STEEL f_s = 20000 psi

WALL DESIGN LOADING: (REFER TO TABLE 1 – LATERAL EARTH PRESSURE VALUES, 313 STANDARD, SECTION IV OF THE TECHNICAL GUIDE.)

MINIMUM BACKFILL HEIGHT = 0 IN. MAXIMUM BACKFILL HEIGHT = 2'-0"

MANURE LOAD INSIDE = 60 psf/ft. SOIL BACKFILL OUTSIDE LOADING = 60 psf/ft WITH 100 psf HORIZONTAL SURCHARGE OR 75 psf/ft WITH NO SURCHARGE.
BACKFILL SOIL WEIGHT – 100 pcf.

FLOOR DESIGN:

MAXIMUM FOOTING CONTACT PRESSURE 500 psf.
WATER TABLE MUST BE BELOW THE FOOTING ELEVATION.

WALL RESTRAINT:

WALLS MUST BE RESTRAINED WITH A FLOOR SLAB WHEN BACKFILLED.
(5" THICK SLAB ASSUMED, SAFETY FACTOR AGAINST SLIDING 1.3 MIN.)
PLAN 1 – 16 FEET MINIMUM UNRESTRAINED SLAB LENGTH.
PLAN 2 – 7 FEET MINIMUM UNRESTRAINED SLAB LENGTH.

PRINT THIS PAGE

AFTER CLICKING PRINT BUTTON CHANGE PRINT RANGE OPTION TO CURRENT PAGE TO PRINT THIS PAGE ONLY

Adapted from Wisconsin drawing No. WI-512A and Iowa IA-911. Replaces Nebraska 5007-1

Revised 7/04

2 FOOT HIGH R/C WALL 6" WALL THICKNESS

Nebraska Standard Drawing NE200-20-002 Rev. 7/04 Replaces 5007-1

Date
Designed
Drawn
Checked
Approved

NRCS
Natural Resources Conservation Service
United States Department of Agriculture

CAD file: NE200-20-002.dwg
Drawing No.
Sheet of

NOTES:

1. STANDARDIZED DESIGN: MUST BE ADAPTED TO SPECIFIC SITE.

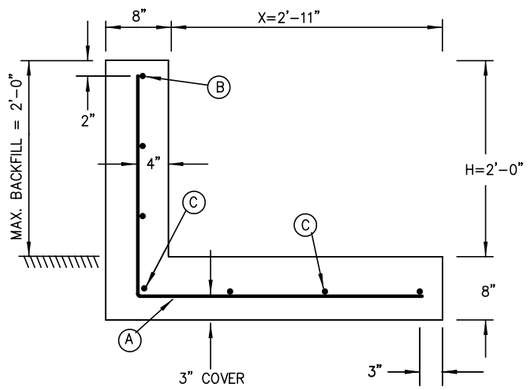

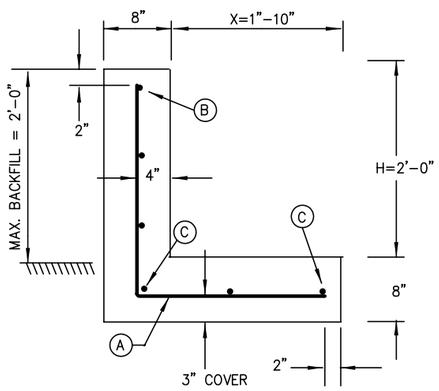

PLAN 1

SURCHARGE = 100 psf

CONDITIONS OF USE:	DESIGN VALUES:
BACKFILL=0 TO 2 FEET	MANURE=60 psf/ft EFP EARTH=60 psf/ft EFP

MARK A	MARK B	MARK C	MARK L
#4 @ 12" a=2'-3" b=3'-0" L=5'-3"	3-#4 @ 9"	4-#4 @ 12"	3-#4 @ 9"

NOTES FOR PLAN 1 AND 2

1. CONSTRUCTION JOINT OPTIONAL (SEE RIGHT SIDE)
2. RECOMMEND BACKFILL TO TOP OF WALL FOR FROST PROTECTION.
3. MINIMUM BACKFILL = 0'

PLAN 2

SURCHARGE = NONE

CONDITIONS OF USE:	DESIGN VALUES:
BACKFILL=0 TO 2 FEET	MANURE=60 psf/ft EFP EARTH=75 psf/ft EFP

MARK A	MARK B	MARK C	MARK L
#4 @ 12" a=2'-3" b=2'-0" L=4'-3"	3-#4 @ 9"	3-#4 @ 12"	3-#4 @ 9"

SPLICES IN MARK B AND C BARS ARE 13" MIN.

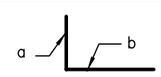

TYPE 21 bar

CORNER DETAIL (PLAN VIEW)

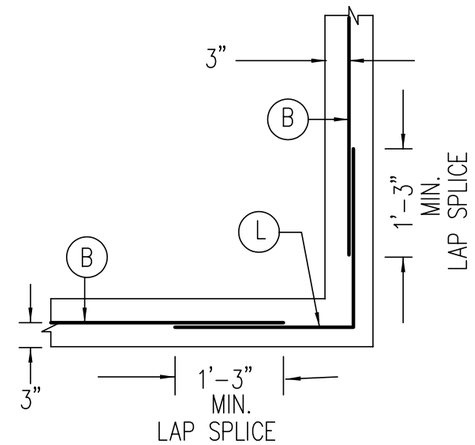

CONSTRUCTION JOINT OPTIONS

A) IF SLAB AND WALL ARE POURED SEPARATELY, THE SLAB SURFACE MUST BE THOROUGHLY CLEANED WITH WATER AND A WIRE BRUSH. THE SURFACE OF OF THE JOINT SHALL BE KEPT MOIST FOR AT LEAST 1 HR. PRIOR TO PLACEMENT OF NEW CONCRETE.

B) THE SLAB AND WALL MAY BE POURED AT THE SAME TIME ELIMINATING THE NEED FOR A CONSTRUCTION JOINT.

GENERAL DESIGN NOTES:

THIS DESIGN MEETS MEDIUM DESIGN LIFE (20 YEARS).
DRAINAGE SHALL BE AWAY FROM THE WALL.
A MINIMUM BACKFILL IS RECOMMENDED FOR FROST PROTECTION.
BACKFILL SHALL BE SLOPED AWAY FROM THE WALL.

DESIGN STRENGTHS: (WORKING STRESS DESIGN)

CONCRETE f_c = 3500 psi STEEL f_s = 20000 psi

WALL DESIGN LOADING: (REFER TO TABLE 1 – LATERAL EARTH PRESSURE VALUES, 313 STANDARD, SECTION IV OF THE TECHNICAL GUIDE.)

MINIMUM BACKFILL HEIGHT = 0 IN. MAXIMUM BACKFILL HEIGHT = 2'-0"

MANURE LOAD INSIDE = 60 psf/ft. SOIL BACKFILL OUTSIDE LOADING = 60 psf/ft WITH 100 psf HORIZONTAL SURCHARGE OR 75 psf/ft WITH NO SURCHARGE.
BACKFILL SOIL WEIGHT – 100 pcf.

FLOOR DESIGN:

MAXIMUM FOOTING CONTACT PRESSURE IS 550 psf.
WATER TABLE MUST BE BELOW THE FOOTING ELEVATION.

WALL RESTRAINT:

WALLS MUST BE RESTRAINED WITH A FLOOR SLAB WHEN BACKFILLED.
(5" THICK SLAB ASSUMED, SAFETY FACTOR AGAINST SLIDING 1.3 MIN.)
PLAN 1 – 16 FEET MINIMUM UNRESTRAINED SLAB LENGTH.
PLAN 2 – 7 FEET MINIMUM UNRESTRAINED SLAB LENGTH.

#4 BARS, TOTAL LENGTH = _____ x 0.668 LBS/FT. = _____ POUNDS

MARK	SIZE	QUANTITY	TYPE	a	b	LENGTH	TOTAL LENGTH
A	#4		21	2'-3"			
B	#4		Str.	——	——		
C	#4		Str.	——	——		
L	#4		21	2'-6"	2'-6"	5'-0"	

ESTIMATED QUANTITIES

* CONCRETE (CLASS 4000/4000M) _____ CU.YDS.
REINFORCING STEEL _____ LBS. OR FT.

* CONCRETE QUANTITY – 0.138 CU. YDS./FT. FOR PLAN 1
– 0.111 CU. YDS./FT. FOR PLAN 2

PRINT THIS PAGE

AFTER CLICKING PRINT BUTTON CHANGE PRINT RANGE OPTION TO CURRENT PAGE TO PRINT THIS PAGE ONLY

Adapted from Wisconsin drawing no. WI-512B and Iowa IA-912. Replaces Nebraska 5007-2

Revised 7/04

2 FOOT HIGH R/C WALL 8" WALL THICKNESS

Date
Designed
Drawn
Checked
Approved

NRCS
Natural Resources Conservation Service
United States Department of Agriculture

CAD file: NE200-20-003.dwg
Drawing No.
Sheet of

Nebraska Standard Drawing
NE200-20-003 Rev. 7/04 Replaces 5007-2

NOTES:

1. STANDARDIZED DESIGN: MUST BE ADAPTED TO THE SPECIFIC SITE.

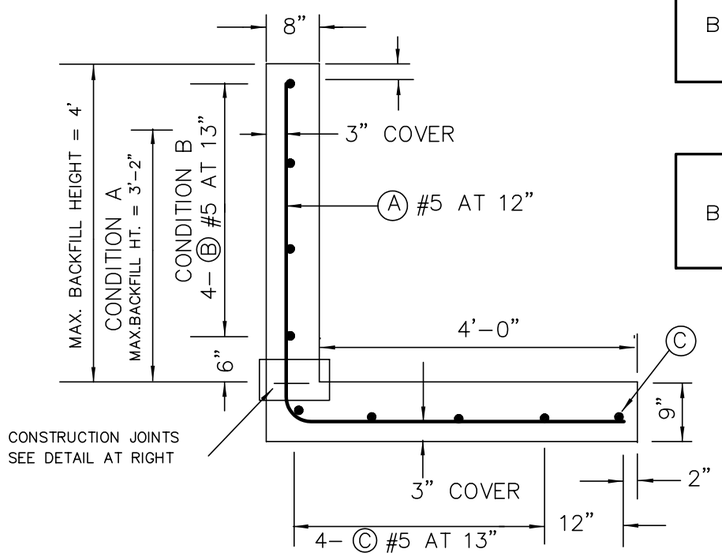

USE CONDITION A
BACKFILL = 2'-0" TO 4'-0"
NO SURCHARGE

USE CONDITION B
BACKFILL = 2'-0" TO 3'-2"
SURCHARGE = 100 psf

NOTES:

1. CONSTRUCTION JOINT OPTIONAL (SEE RIGHT SIDE)
2. A 2-FOOT MINIMUM BACKFILL IS REQUIRED.

CORNER DETAIL (PLAN VIEW)

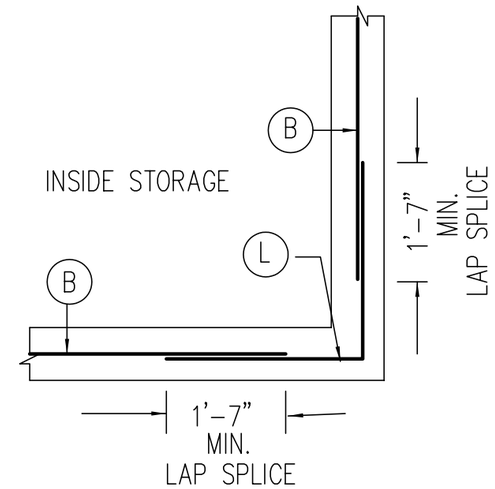

CONSTRUCTION JOINT OPTIONS

1) SANDBLASTING OR AIR-WATER CUTTING
2) STEEL PLATE

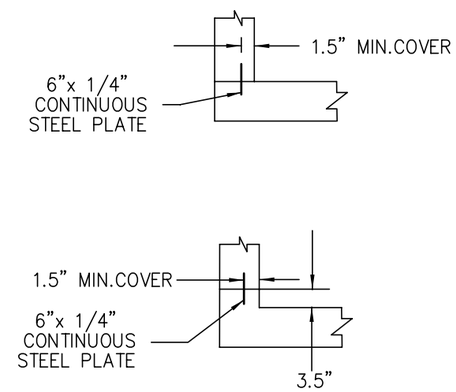

STEEL SCHEDULE

MARK	SIZE	QUANTITY	TYPE	a	b	LENGTH	TOTAL LENGTH
A	#5		21	4'-3"	4'-3"	8'-6"	
B	#5		STRAIGHT	——	——		
C	#5		STRAIGHT	——	——		
L	#5		21	2'-6"	2'-6"	5'-0"	
TOTAL							

SPLICES IN BAR MARKS B AND C ARE 19" MINIMUM.

#5 BARS, TOTAL LENGTH = _____ x 1.043 LBS/FT _____ POUNDS.

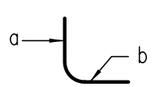

TYPE 21 BAR

ESTIMATED QUANTITIES

*CONCRETE (CLASS 4000/4000M) _____ CU.YDS.

REINFORCING STEEL _____ LBS. OR FT.

*CONCRETE QUANTITY-0.228 CU.YDS./FT.

GENERAL DESIGN NOTES:

THIS DESIGN MEETS MEDIUM DESIGN LIFE (20 YEARS).
DRAINAGE SHALL BE AWAY FROM THE WALL.
CONCRETE IN THE WALL AND SLAB MAY BE POURED AT THE SAME TIME ELIMINATING THE NEED FOR A CONSTRUCTION JOINT.
A MINIMUM BACKFILL OF 2 FEET IS REQUIRED.

DESIGN STRENGTHS: (WORKING STRESS DESIGN)

CONCRETE f_c = 3500 psi STEEL f_s = 20000 psi

WALL DESIGN LOADING: (REFER TO TABLE 1 - LATERAL EARTH PRESSURE VALUES, 313 STANDARD, SECTION IV OF THE TECHNICAL GUIDE.)

MINIMUM BACKFILL HEIGHT = 2'-0". MAXIMUM BACKFILL HEIGHT = 4'-0"
MANURE LOAD INSIDE = 60 psf/ft. SOIL BACKFILL OUTSIDE LOADING = 75 psf/ft WITH 100 psf HORIZONTAL SURCHARGE OR 75 psf/ft WITH NO SURCHARGE.
BACKFILL SOIL WEIGHT - 100 pcf.

FLOOR DESIGN:

MAXIMUM FOOTING CONTACT PRESSURE IS 650 psf.
WATER TABLE MUST BE BELOW THE FOOTING ELEVATION.

WALL RESTRAINT:

WALLS MUST BE RESTRAINED WITH A FLOOR SLAB WHEN BACKFILLED.
(5" THICK SLAB ASSUMED, SAFETY FACTOR AGAINST SLIDING 1.3 MIN.)
36 FEET MINIMUM UNRESTRAINED SLAB LENGTH WITH SURCHARGE LOAD.
30 FEET MINIMUM UNRESTRAINED SLAB LENGTH - NO SURCHARGE LOAD

PRINT THIS PAGE

AFTER CLICKING PRINT BUTTON CHANGE PRINT RANGE OPTION TO CURRENT PAGE TO PRINT THIS PAGE ONLY

Revised 7/04

4-FOOT HIGH R/C WALL
8" WALL THICKNESS

Adapted from Wisconsin drawing no. WI-505B and Iowa IA-913. Replaces Nebraska 5007-3

Nebraska Standard Drawing
NE200-20-004 Rev. 7/04 Replaces 5007-3

Date
Designed
Drawn
Checked
Approved

NRCS
Natural Resources Conservation Service
United States Department of Agriculture

CAD file:
NE200-20-004.dwg

Drawing No.

Sheet of

NOTES:

1. STANDARDIZED DESIGN: MUST BE ADAPTED TO THE SPECIFIC SITE.

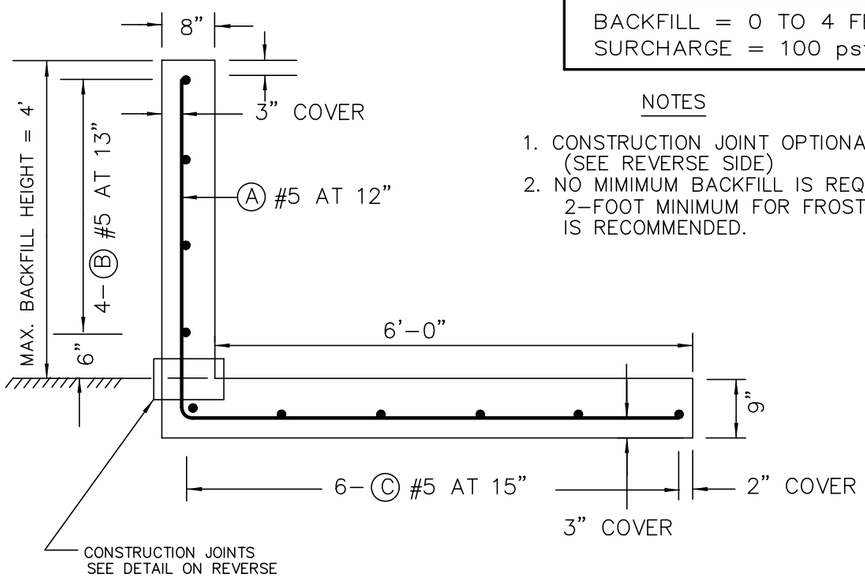

CONDITIONS OF USE

BACKFILL = 0 TO 4 FEET
SURCHARGE = 100 psf

NOTES

1. CONSTRUCTION JOINT OPTIONAL (SEE REVERSE SIDE)
2. NO MIMIMUM BACKFILL IS REQUIRED BUT 2–FOOT MINIMUM FOR FROST PROTECTION IS RECOMMENDED.

STEEL SCHEDULE

MARK	SIZE	QUANTITY	TYPE	a	b	LENGTH	TOTAL LENGTH
A	#5		21	4'–3"	6'–3"	10'–6"	
B	#5		STRAIGHT	——	——		
C	#5		STRAIGHT	——	——		
L	#5		21	2'–6"	2'–6"	5'–0"	
TOTAL							

SPLICES IN BAR MARKS B AND C ARE 19" MINIMUM.

#5 BARS, TOTAL LENGTH = _____ x 1.043 LBS/FT _____ POUNDS.

ESTIMATED QUANTITIES

*CONCRETE (CLASS 4000/4000M) _____ CU.YDS.

REINFORCING STEEL _____ LBS. OR FT.

*CONCRETE QUANTITY–0.284 CU.YDS./FT.

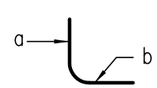

TYPE 21 BAR

CORNER DETAIL (PLAN VIEW)

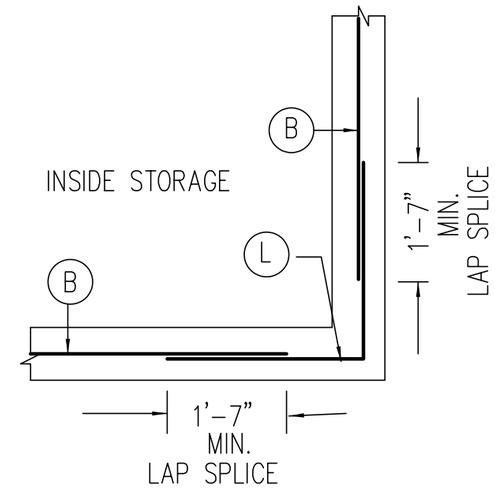

CONSTRUCTION JOINT OPTIONS

1) SANDBLASTING OR AIR–WATER CUTTING
2) STEEL PLATE

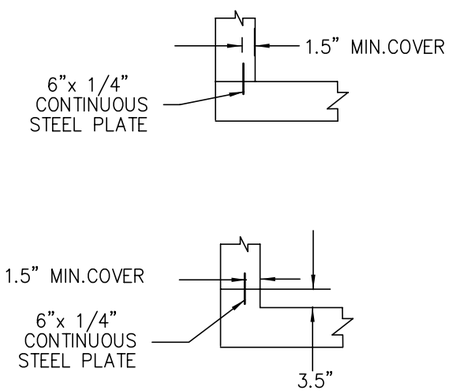

GENERAL DESIGN NOTES:

THIS DESIGN MEETS MEDIUM DESIGN LIFE (20 YEARS).
DRAINAGE SHALL BE AWAY FROM THE WALL.
CONCRETE IN THE WALL AND SLAB MAY BE POURED AT THE SAME TIME ELIMINATING THE NEED FOR A CONSTRUCTION JOINT.
A MINIMUM BACKFILL OF 2 FEET IS RECOMMENDED FOR FROST PROTECTION.

DESIGN STRENGTHS: (WORKING STRESS DESIGN)

CONCRETE f_c = 3500 psi STEEL f_s = 20000 psi

WALL DESIGN LOADING: (REFER TO TABLE 1 – LATERAL EARTH PRESSURE VALUES, 313 STANDARD, SECTION IV OF THE TECHNICAL GUIDE.)

MINIMUM BACKFILL HEIGHT = 0 IN. MAXIMUM BACKFILL HEIGHT = 4'–0"
MANURE LOAD INSIDE = 60 psf/ft. SOIL BACKFILL OUTSIDE LOADING = 75 psf/ft WITH 100 psf HORIZONTAL SURCHARGE OR 75 psf/ft WITH NO SURCHARGE.
BACKFILL SOIL WEIGHT – 100 pcf.

FLOOR DESIGN:

MAXIMUM FOOTING CONTACT PRESSURE IS 650 psf.
WATER TABLE MUST BE BELOW THE FOOTING ELEVATION.

WALL RESTRAINT:

WALLS MUST BE RESTRAINED WITH A FLOOR SLAB WHEN BACKFILLED.
(5" THICK SLAB ASSUMED, SAFETY FACTOR AGAINST SLIDING 1.3 MIN.)
50 FEET MINIMUM UNRESTRAINED SLAB LENGTH WITH SURCHARGE LOAD.
26 FEET MINIMUM UNRESTRAINED SLAB LENGTH – NO SURCHARGE LOAD.

PRINT THIS PAGE

AFTER CLICKING PRINT BUTTON CHANGE PRINT RANGE OPTION TO CURRENT PAGE TO PRINT THIS PAGE ONLY

Revised 7/04

4–FOOT HIGH R/C WALL
8" WALL THICKNESS

Adapted from Wisconsin drawing no. WI–505A and Iowa IA–914. Replaces Nebraska 5007–4

Nebraska Standard Drawing
NE200–20–005 Rev. 7/04 Replaces 5007–4

Date
Designed
Drawn
Checked
Approved

NRCS
Natural Resources Conservation Service
United States Department of Agriculture

CAD file: NE200–20–005.dwg
Drawing No.
Sheet of

NOTES:

1. STANDARDIZED DESIGN: MUST BE ADAPTED TO SPECIFIC SITE.
2. THE MAXIMUM BACKFILL HEIGHT = 4'–0"; MINIMUM BACKFILL HEIGHT = 2'–0".
3. CAN BE USED AS A SUPPORT WALL FOR A PUSH OFF RAMP. WILL WITHSTAND 10,000 POUND AXIAL LOAD OVER A (9) NINE FOOT SPAN. SEE NOTE FOR CHANGE IN BAR SPACING WHEN USED IN THIS MANNER.
4. WALL MUST BE RESTRAINED WITH FLOOR SLAB.

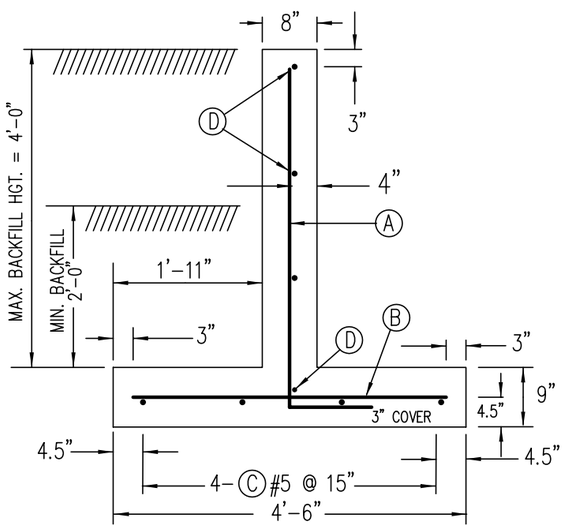

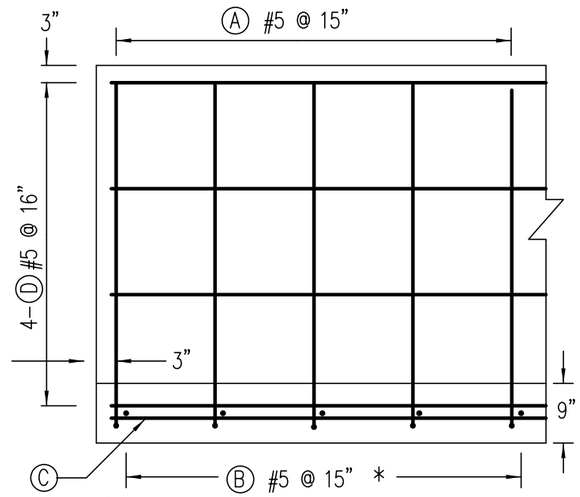

* NOTE: WHEN TEE WALL USED TO SUPPORT PUSH OFF RAMP MARK (B) TO BE PLACED @ 12" C TO C.

BAR SCHEDULE

MARK	SIZE	QUANTITY	TYPE	a	b	LENGTH	TOTAL LENGTH
A	5		21	4'–3"	1'–0"	5'–3"	
B	5		Straight	——	——	4'–0"	
C	5		Straight	——	——		
D	5		Straight	——	——		
L	5		21	2'–6"	2'–6"	5'–0"	

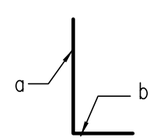

TYPE 21 BAR

#5 BARS, TOTAL LENGTH = _____ FT. OR

TOTAL LENGTH x 1.043 LBS/FT = _____ LBS. OR

CONCRETE – 0.224 CU. YDS./FT.

ESTIMATED QUANTITIES

CONCRETE (CLASS 4000/4000M) _____ CU.YDS.

REINFORCING STEEL _____ LBS. OR FT.

PRINT THIS PAGE

AFTER CLICKING PRINT BUTTON CHANGE PRINT RANGE OPTION TO CURRENT PAGE TO PRINT THIS PAGE ONLY

CORNER DETAIL (PLAN VIEW)

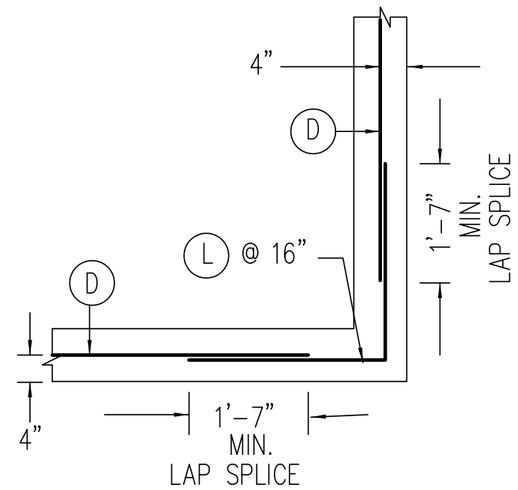

CONSTRUCTION JOINT OPTIONS

1) SAND BLASTING OR AIR WATER CUTTING.
2) STEEL PLATE. SEE EXAMPLES BELOW.

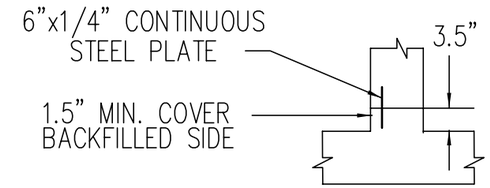

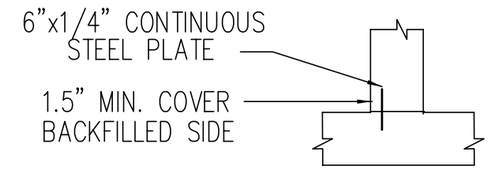

GENERAL DESIGN NOTES:

THIS DESIGN MEETS MEDIUM DESIGN LIFE (20 YEARS).
DRAINAGE SHALL BE AWAY FROM THE WALL.
THE TOP WIDTH OF THE BACKFILL AGAINST THE WALL SHALL BE EQUAL TO OR GREATER THAN THE BACKFILL HEIGHT.
BACKFILL SHALL BE SLOPED AWAY FROM THE WALL.

DESIGN STRENGTHS: (WORKING STRENGTH DESIGN)

CONCRETE f_c = 3500 psi STEEL f_s = 20,000 psi

WALL DESIGN LOADING: (REFER TO TABLE 1–LATERAL EARTH PRESSURE VALUES 313 STANDARD, SECTION IV OF THE TECHNICAL GUIDE.)

MANURE LOAD INSIDE = 60 psf/ft. SOIL BACKFILL OUTSIDE LOADING = 60 psf/ft
MINIMUM BACKFILL HEIGHT = 2 FEET. MAXIMUM BACKFILL HEIGHT = 4 FEET.
100 psf HORIZONTAL SURCHARGE ADDED. BACKFILL SOIL WEIGHT = 100 pcf.

FLOOR DESIGN:

FOUNDATION SOILS SHOULD PROVIDE AT LEAST 1000 psf BEARING CAPACITY WHEN USED AS A WALL AND 1500 psf WHEN USED AS A PUSH OFF RAMP SUPPORT WALL. WATER TABLE MUST BE BELOW THE FOOTING ELEVATION.

WALL RESTRAINT:

WALLS MUST BE RESTRAINED WITH A FLOOR SLAB. MIN. 40 FEET REQUIRED. (5" THICK SLAB ASSUMED, SAFETY FACTOR AGAINST SLIDING 1.3 MIN.)

Revised 7/04

Adapted from Wisconsin drawing no. WI–510 and Iowa IA–915. Replaces Nebraska 5007–5

4' HIGH R/C "TEE" WALL 8" WALL THICKNESS

Date
Designed
Drawn
Checked
Approved

NRCS
Natural Resources Conservation Service
United States Department of Agriculture

CAD file: NE200–20–006.dwg
Drawing No.
Sheet of

Nebraska Standard Drawing
NE200–20–006 Rev. 7/04 Replaces 5007–5

NOTES:
1. STANDARDIZED DESIGN: MUST BE ADAPTED TO SPECIFIC SITE.

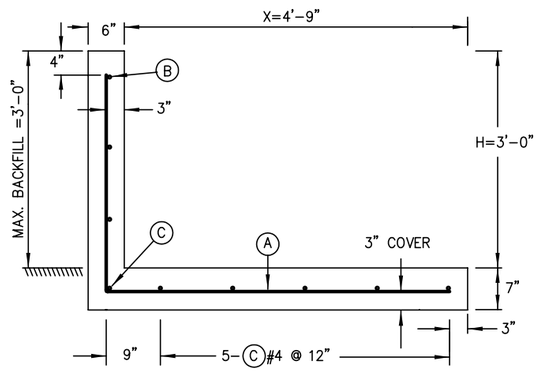

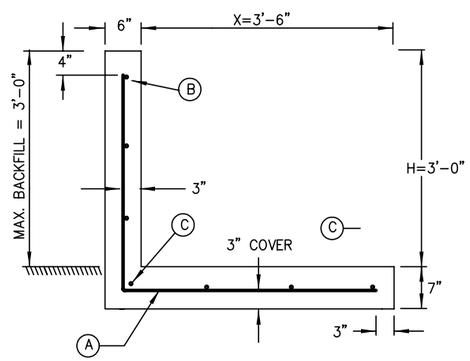

PLAN 1

SURCHARGE = 100 psf

CONDITIONS OF USE:	DESIGN VALUES:
BACKFILL=0 TO 3 FEET	MANURE=60 psf/ft EFP EARTH=60 psf/ft EFP

MARK A	MARK B	MARK C	MARK L
#4 @ 12" a=3'-0" b=4'-9" L=7'-9"	3-#4 @ 12"	6-#4	3-#4 @ 12"

NOTES FOR PLAN 1 AND 2

1. CONSTRUCTION JOINT OPTIONAL (SEE RIGHT SIDE)
2. RECOMMEND A 2 FOOT MIN. BACKFILL FOR FROST PROTECTION.
3. MINIMUM BACKFILL = 0'

PLAN 2

NO SURCHARGE

CONDITIONS OF USE:	DESIGN VALUES:
BACKFILL=0 TO 3 FEET	MANURE=60 psf/ft EFP EARTH=75 psf/ft EFP

MARK A	MARK B	MARK C	MARK L
#4 @ 12" a=3'-0" b=3'-6" L=6'-6"	3-#4 @ 12"	4-#4 @ 14"	3-#4 @ 12"

SPLICES IN MARK B AND C BARS ARE 13" MIN.

TYPE 21 bar

CORNER DETAIL (PLAN VIEW)

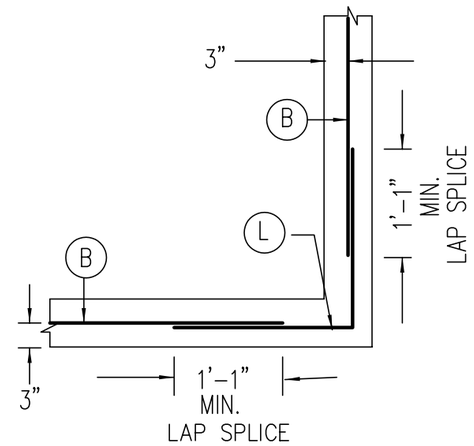

CONSTRUCTION JOINT OPTIONS

1) SANDBLASTING OR AIR-WATER CUTTING.
2) STEEL PLATE

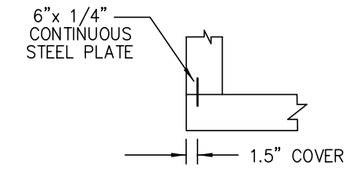

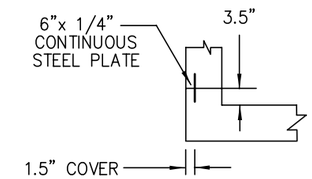

GENERAL DESIGN NOTES:

THIS DESIGN MEETS MEDIUM DESIGN LIFE (20 YEARS).
DRAINAGE SHALL BE AWAY FROM THE WALL.
CONCRETE IN THE WALL AND SLAB MAY BE POURED AT THE SAME TIME ELIMINATING THE NEED FOR A CONSTRUCTION JOINT.
A MINIMUM BACKFILL IS RECOMMENDED FOR FROST PROTECTION.
BACKFILL SHALL BE SLOPED AWAY FROM THE WALL.

DESIGN STRENGTHS: (WORKING STRESS DESIGN)

CONCRETE f_c = 3500 psi STEEL f_s = 20000 psi

WALL DESIGN LOADING: (REFER TO TABLE 1 – LATERAL EARTH PRESSURE VALUES, 313 STANDARD, SECTION IV OF THE TECHNICAL GUIDE.)

MINIMUM BACKFILL HEIGHT = 0 IN. MAXIMUM BACKFILL HEIGHT = 3'-0"

MANURE LOAD INSIDE = 60 psf/ft. SOIL BACKFILL OUTSIDE LOADING = 60 psf/ft WITH 100 psf HORIZONTAL SURCHARGE OR 75 psf/ft WITH NO SURCHARGE.
BACKFILL SOIL WEIGHT – 100 pcf.

#4 BARS, TOTAL LENGTH = _____ x 0.668 LBS/FT. = _____ POUNDS

MARK	SIZE	QUANTITY	TYPE	a	b	LENGTH	TOTAL LENGTH
A	#4		21	3'-0"			
B	#4		Str.	—	—		
C	#4		Str.	—	—		
L	#4		21	2'-6"	2'-6"	5'-0"	

ESTIMATED QUANTITIES

* CONCRETE (CLASS 4000/4000M) _____ CU.YDS.
REINFORCING STEEL _____ LBS. OR FT.

* CONCRETE QUANTITY – 0.169 CU. YDS./FT. FOR PLAN 1
– 0.142 CU. YDS./FT. FOR PLAN 2

FLOOR DESIGN:

MAXIMUM FOOTING CONTACT PRESSURE IS 600 psf.
WATER TABLE MUST BE BELOW THE FOOTING ELEVATION.

WALL RESTRAINT:

WALLS MUST BE RESTRAINED WITH A FLOOR SLAB WHEN BACKFILLED.
(5" THICK SLAB ASSUMED, SAFETY FACTOR AGAINST SLIDING 1.3 MIN.)
PLAN 1 – 28 FEET MINIMUM UNRESTRAINED SLAB LENGTH.
PLAN 2 – 16 FEET MINIMUM UNRESTRAINED SLAB LENGTH.

PRINT THIS PAGE

AFTER CLICKING PRINT BUTTON CHANGE PRINT RANGE OPTION TO CURRENT PAGE TO PRINT THIS PAGE ONLY

Adapted from Wisconsin drawing no. WI-513 and Iowa IA-916. Replaces Nebraska 5007-6

Revised 7/04

3 FOOT HIGH R/C WALL
6" WALL THICKNESS

Date
Designed
Drawn
Checked
Approved

NRCS
Natural Resources Conservation Service
United States Department of Agriculture

CAD file: NE200-20-007.dwg
Drawing No.
Sheet of

Nebraska Standard Drawing
NE200-20-007 Rev. 7/04 Replaces 5007-6

NOTES:
1. STANDARDIZED DESIGN: MUST BE ADAPTED TO SPECIFIC SITE.

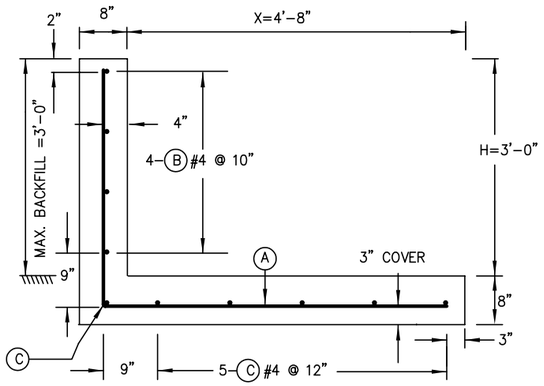

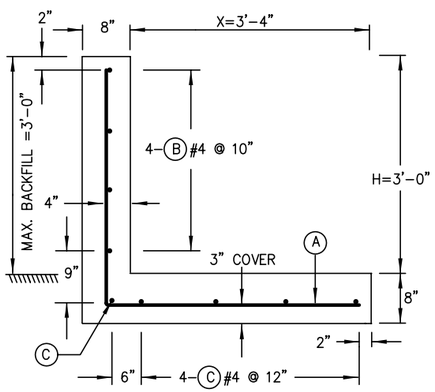

PLAN 1

SURCHARGE = 100 psf

CONDITIONS OF USE:	DESIGN VALUES:
BACKFILL=0 TO 3 FEET	MANURE=60 psf/ft EFP EARTH=60 psf/ft EFP

MARK A	MARK B	MARK C	MARK L
#4 @ 12" a=3'-3" b=4'-9" L=8'-0"	4-#4	6-#4	4-#4

NOTES FOR PLAN 1 AND 2

1. CONSTRUCTION JOINT OPTIONAL (SEE REVERSE SIDE)
2. RECOMMEND A 2 FOOT MIN. BACKFILL FOR FROST PROTECTION.
3. MINIMUM BACKFILL = 0'

PLAN 2

NO SURCHARGE

CONDITIONS OF USE:	DESIGN VALUES:
BACKFILL=0 TO 3 FEET	MANURE=60 psf/ft EFP EARTH=75 psf/ft EFP

MARK A	MARK B	MARK C	MARK L
#4 @ 12" a=3'-3" b=3'-6" L=6'-9"	4-#4	5-#4	4-#4

SPLICES IN MARK B AND C BARS ARE 13" MIN.

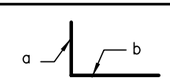

TYPE 21 bar

#4 BARS, TOTAL LENGTH = _____ x 0.668 LBS/FT. = _____ POUNDS

MARK	SIZE	QUANTITY	TYPE	a	b	LENGTH	TOTAL LENGTH
A	#4		21	3'-0"			
B	#4		Str.	—	—		
C	#4		Str.	—	—		
L	#4		21	2'-6"	2'-6"	5'-0"	

ESTIMATED QUANTITIES

* CONCRETE (CLASS 4000/4000M) _____ CU.YDS.
REINFORCING STEEL _____ LBS. OR FT.

* CONCRETE QUANTITY – 0.206 CU. YDS./FT. FOR PLAN 1
– 0.173 CU. YDS./FT. FOR PLAN 2

PRINT THIS PAGE

AFTER CLICKING PRINT BUTTON CHANGE PRINT RANGE OPTION TO CURRENT PAGE TO PRINT THIS PAGE ONLY

CORNER DETAIL (PLAN VIEW)

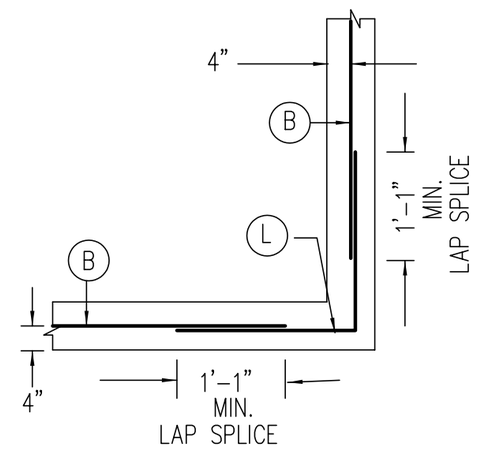

CONSTRUCTION JOINT OPTIONS

1) SANDBLASTING OR AIR-WATER CUTTING
2) STEEL PLATE

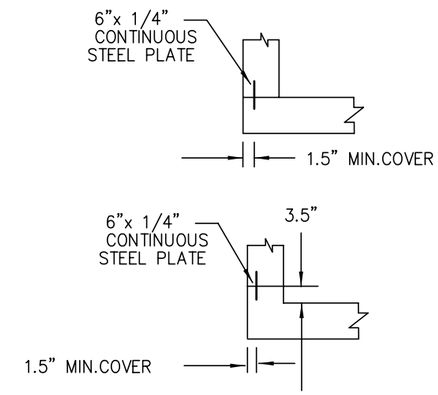

GENERAL DESIGN NOTES:

THIS DESIGN MEETS MEDIUM DESIGN LIFE (20 YEARS).
DRAINAGE SHALL BE AWAY FROM THE WALL.
CONCRETE IN THE WALL AND SLAB MAY BE POURED AT THE SAME TIME ELIMINATING THE NEED FOR A CONSTRUCTION JOINT.
A MINIMUM BACKFILL IS RECOMMENDED FOR FROST PROTECTION.
BACKFILL SHALL BE SLOPED AWAY FROM THE WALL.

DESIGN STRENGTHS: (WORKING STRESS DESIGN)

CONCRETE f_c = 3500 psi STEEL f_s = 20000 psi

WALL DESIGN LOADING: (REFER TO TABLE 1 – LATERAL EARTH PRESSURE VALUES, 313 STANDARD, SECTION IV OF THE TECHNICAL GUIDE.)

MINIMUM BACKFILL HEIGHT = 0 IN. MAXIMUM BACKFILL HEIGHT = 3'-0"

MANURE LOAD INSIDE = 60 psf/ft. SOIL BACKFILL OUTSIDE LOADING = 60 psf/ft WITH 100 psf HORIZONTAL SURCHARGE OR 75 psf/ft WITH NO SURCHARGE.
BACKFILL SOIL WEIGHT – 100 pcf.

FLOOR DESIGN:

MAXIMUM FOOTING CONTACT PRESURE IS 650 psf.
WATER TABLE MUST BE BELOW THE FOOTING ELEVATION.

WALL RESTRAINT:

WALLS MUST BE RESTRAINED WITH A FLOOR SLAB WHEN BACKFILLED.
(5" THICK SLAB ASSUMED, SAFETY FACTOR AGAINST SLIDING 1.3 MIN.)
PLAN 1 – 27 FEET MINIMUM UNRESTRAINED SLAB LENGTH.
PLAN 2 – 15 FEET MINIMUM UNRESTRAINED SLAB LENGTH.

Revised 7/04

Adapted from Wisconsin drawing no. WI-513B and Iowa IA-917. Replaces Nebraska 5007-7

3 FOOT HIGH R/C WALL
8" WALL THICKNESS

Date
Designed
Drawn
Checked
Approved

NRCS
Natural Resources Conservation Service
United States Department of Agriculture

CAD file: NE200-20-008.dwg
Drawing No.
Sheet of

Nebraska Standard Drawing
NE200-20-008 Rev. 7/04 Replaces 5007-7

NOTES:
1. STANDARDIZED DESIGN: MUST BE ADAPTED TO SPECIFIC SITE.
2. THE MAXIMUM BACKFILL HEIGHT = 5'–0"; MINIMUM BACKFILL HEIGHT = 3'–0".
3. WALL MUST BE RESTRAINED WITH FLOOR SLAB.
4. SEE NOTE BELOW WHEN WALL IS TO BE USED TO SUPPORT PUSH OFF RAMP.
   WALL WILL WITHSTAND 10,000 POUND AXIAL LOAD OVER A (9) NINE FOOT SPAN.

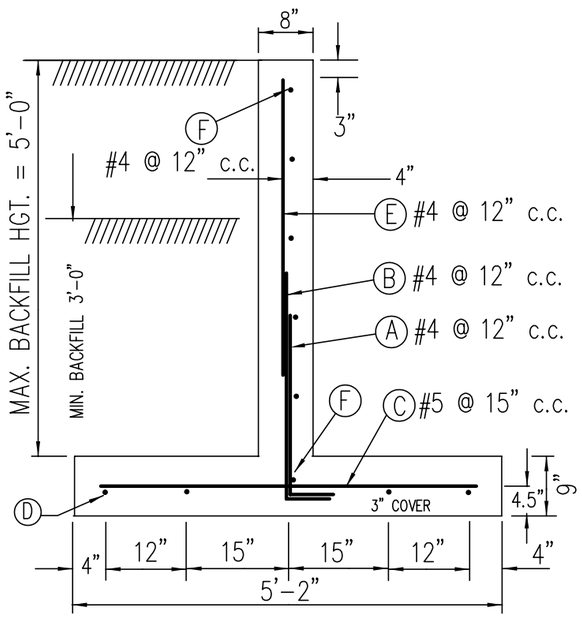

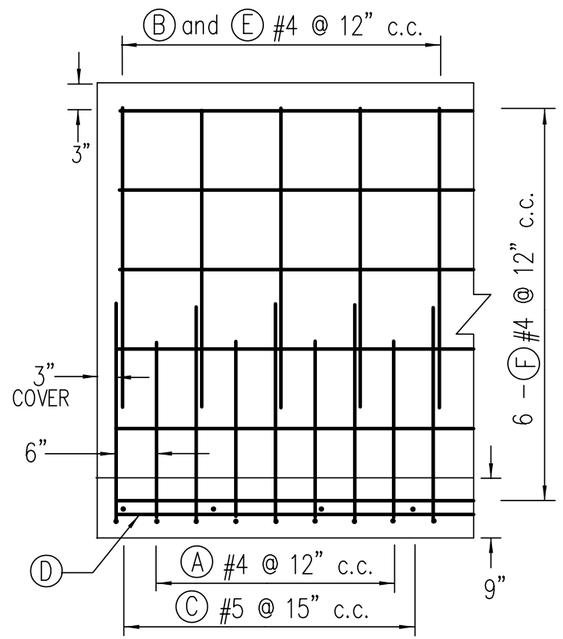

CORNER DETAIL (PLAN VIEW)

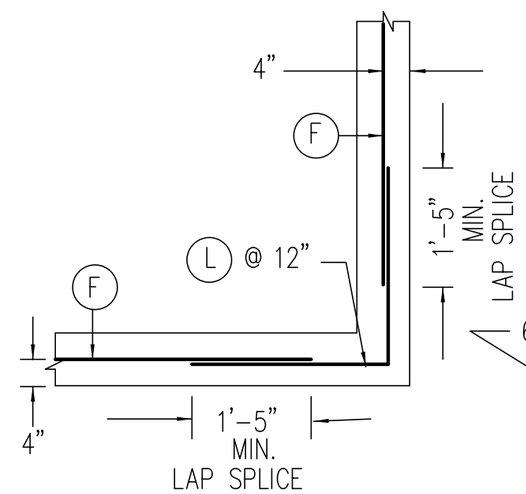

DETAILS OF WALL CONSTRUCTION JOINTS

FORM KEY TYPE

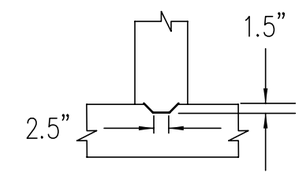

STEEL PLATE TYPE

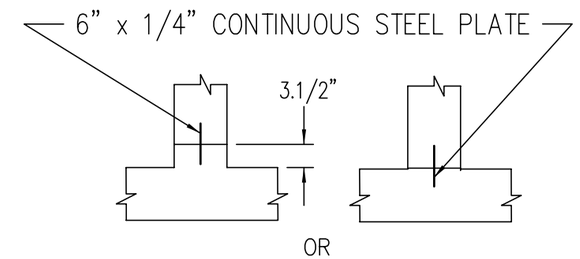

BAR SCHEDULE

MARK	SIZE	QUANTITY	TYPE	a	b	LENGTH	TOTAL LENGTH
* A	4		21	2'–3"	0'–9"	3'–0"	
* B	4		21	2'–9"	0'–9"	3'–6"	
C	5		Straight	——	——		
D	5		Straight	——	——		
E	4		Straight	——	——	3'–9"	
F	4		Straight	——	——		
L	4		21	2'–6"	2'–6"	5'–0"	

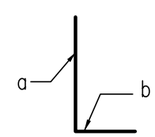

TYPE 21 BAR

#4 BARS, TOTAL LENGTH = _____ x 0.668 LBS/FT. = _____ POUNDS
#5 BARS, TOTAL LENGTH = _____ x 1.043 LBS/FT. = _____ POUNDS
* CONCRETE – 0.267 CU. YDS./FT.

NOTE: WHEN TEE WALL USED TO SUPPORT PUSH OFF RAMP MARK (A) AND (B) TO HAVE LENGTH "b" DIMENSION OF 2'–3". CHANGE BAR SCHEDULE ACCORDINGLY.

ESTIMATED QUANTITIES

CONCRETE (CLASS 4000/4000M) _____ CU.YDS.
REINFORCING STEEL _____ POUNDS.

PRINT THIS PAGE

AFTER CLICKING PRINT BUTTON CHANGE PRINT RANGE OPTION TO CURRENT PAGE TO PRINT THIS PAGE ONLY

GENERAL DESIGN NOTES:

THIS DESIGN MEETS MEDIUM DESIGN LIFE (20 YEARS).

DRAINAGE SHALL BE AWAY FROM THE WALL.
THE TOP WIDTH AROUND THE BACK OF THE WALL SHALL BE EQUAL TO OR GREATER THAN THE BACKFILL HEIGHT. THE BACKFILL SHALL BE SLOPED AWAY FROM THE WALL.

DESIGN STRENGTHS: f_c = 3500 psi f_s = 20,000 psi

60 GRADE Fy STEEL TO BE USED FOR T&S REQUIREMENTS

WALL DESIGN LOADING:

MANURE LOAD INSIDE = 60 psf/ft. SOIL BACKFILL OUTSIDE LOADING = 60 psf/ft (REFER TO TABLE 1 – LATERAL EARTH PRESSURE VALUES, 313 STANDARD, SECTION IV OF THE TECHNICAL GUIDE). MINIMUM BACKFILL HEIGHT = 3 FEET. MAXIMUM BACKFILL HEIGHT = 5 FEET. 100 psf HORIZONTAL SURCHARGE ADDED. BACKFILL SOIL WEIGHT – 100 pcf.

FLOOR DESIGN:

FOUNDATION SOILS SHOULD PROVIDE AT LEAST 1000 psf BEARING CAPACITY WHEN USED AS A WALL AND 1500 psf WHEN USED AS A PUSH OFF RAMP SUPPORT WALL. WATER TABLE MUST BE BELOW THE FOOTING ELEVATION.

WALL RESTRAINT:

WALLS MUST BE RESTRAINED WITH A FLOOR SLAB. MIN. 46 FEET REQUIRED.
[5" THICK SLAB ASSUMED, SAFETY FACTOR AGAINST SLIDING 1.3 MIN.]

Adapted from Wisconsin drawing no. WI–531 and Iowa IA–918. Replaces Nebraska 5007–8

Revised 7/04

5' HIGH R/C "TEE" WALL 8" WALL THICKNESS

Nebraska Standard Drawing NE200–20–009 Rev. 7/04 Replaces 5007–8

Date
Designed
Drawn
Checked
Approved

NRCS Natural Resources Conservation Service United States Department of Agriculture

CAD file: NE200–20–009.dwg
Drawing No.
Sheet of

NOTES:
1. STANDARDIZED DESIGN: MUST BE ADAPTED TO SPECIFIC SITE.
2. THE MAXIMUM BACKFILL HEIGHT = 5'–0"; MINIMUM BACKFILL HEIGHT = 3'–0".
3. WALL MUST BE RESTRAINED WITH FLOOR SLAB.

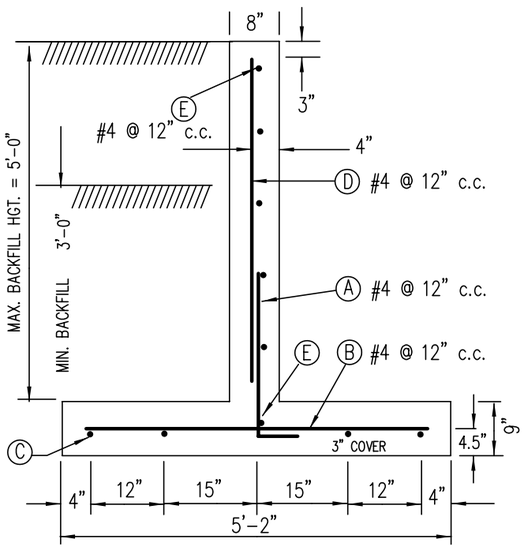

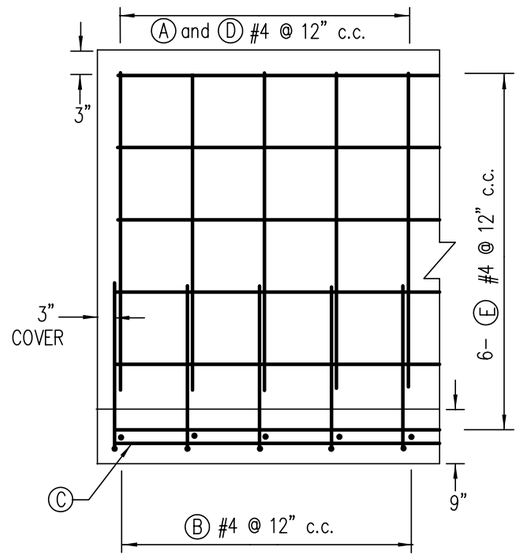

CORNER DETAIL (PLAN VIEW)

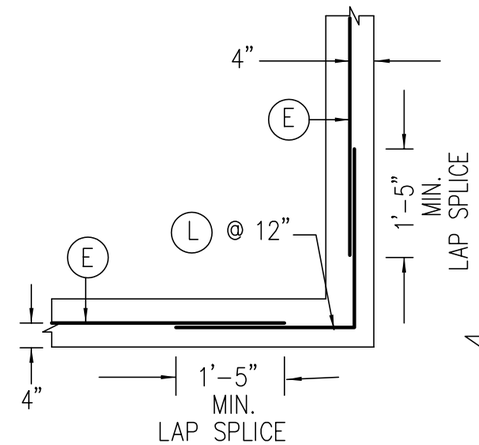

DETAILS OF WALL CONSTRUCTION JOINTS

FORM KEY TYPE

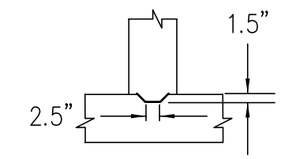

STEEL PLATE TYPE

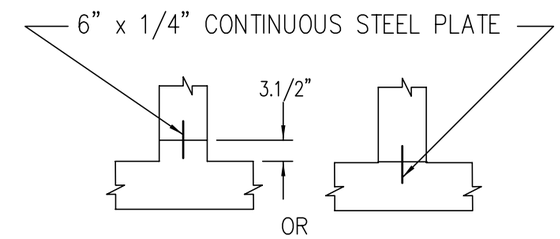

BAR SCHEDULE

MARK	SIZE	QUANTITY	TYPE	a	b	LENGTH	TOTAL LENGTH
A	4		21	2'–3"	0'–9"	3'–0"	
B	4		Straight	——	——	4'–9"	
C	5		Straight	——	——		
* D	4		Straight	——	——		
E	4		Straight	——	——		
L	4		21	2'–6"	2'–6"	5'–0"	

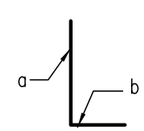

TYPE 21 BAR

#4 BARS, TOTAL LENGTH = _____ x 0.668 LBS/FT. = _____ POUNDS
#5 BARS, TOTAL LENGTH = _____ x 1.043 LBS/FT. = _____ POUNDS
* CONCRETE – 0.267 CU. YDS./FT.
NOTE: LENGTH OF MARK D
4'–6" WHEN 3–1/2" JOINT USED
4'–9" WHEN FLUSH JOINT USED

ESTIMATED QUANTITIES

CONCRETE (CLASS 4000/4000M) _____ CU.YDS.
REINFORCING STEEL _____ POUNDS.

PRINT THIS PAGE

AFTER CLICKING PRINT BUTTON CHANGE PRINT RANGE OPTION TO CURRENT PAGE TO PRINT THIS PAGE ONLY

GENERAL DESIGN NOTES:

THIS DESIGN MEETS MEDIUM DESIGN LIFE (20 YEARS).

DRAINAGE SHALL BE AWAY FROM THE WALL.
THE TOP WIDTH AROUND THE BACK OF THE WALL SHALL BE EQUAL TO OR GREATER THAN THE BACKFILL HEIGHT. THE BACKFILL SHALL BE SLOPED AWAY FROM THE WALL.

DESIGN STRENGTHS: f_c = 3500 psi f_s = 20,000 psi

60 GRADE Fy STEEL TO BE USED FOR T&S REQUIREMENTS

WALL DESIGN LOADING:

MANURE LOAD INSIDE = 60 psf/ft. SOIL BACKFILL OUTSIDE LOADING = 60 psf/ft (REFER TO TABLE 1 – LATERAL EARTH PRESSURE VALUES, 313 STANDARD, SECTION IV OF THE TECHNICAL GUIDE). MINIMUM BACKFILL HEIGHT = 4.5 FEET. MAXIMUM BACKFILL HEIGHT = 5 FEET. BACKFILL SOIL WEIGHT = 100 pcf.

FLOOR DESIGN:

FOUNDATION SOILS SHOULD PROVIDE AT LEAST 800 psf BEARING CAPACITY.
WATER TABLE MUST BE BELOW THE FOOTING ELEVATION.

WALL RESTRAINT:

WALLS MUST BE RESTRAINED WITH A FLOOR SLAB. MIN. 16' REQUIRED.
[5" THICK SLAB ASSUMED. SAFETY FACTOR AGAINST SLIDING 1.3 MIN.]

Adapted from Wisconsin drawing no. WI–530 and Iowa IA–919. Replaces Nebraska 5007–9

Revised 7/04

5' HIGH R/C "TEE" WALL
8" WALL THICKNESS

Nebraska Standard Drawing
NE200–20–010 Rev. 7/04 Replaces 5007–9

Date
Designed
Drawn
Checked
Approved

NRCS
Natural Resources Conservation Service
United States Department of Agriculture

CAD file: NE200–20–010.dwg
Drawing No.
Sheet of