Instructions for
FOTG 382 Fence Drawings

Nebraska Standard Drawings included in this file:
NE500-10-001, NE500-10-002, NE500-10-003, NE500-20-001,
NE500-30-001, NE500-40-001, NE500-40-002, NE500-40-003,
NE500-50-001, NE500-60-001, NE500-60-002, NE500-60-003
Drawings new: 07/01 Revised: 12-06

Fill in the following data fields to automatically fill in the necessary data fields on the drawings. Enter sheet numbers directly on each drawing.

Title block

Title line(s)

Subtitle line

County, State

Job Class

Add sheet numbering directly on drawings.
Add Wood Species directly on line provided on drawings.
Add Special Instructions directly on lines provided on drawings.

Who / When

	(INITIALS)	DATE (Enter like 11/21/01)
Designed		
Drawn		
Checked		

CLEAR ALL DATA FIELDS

PRINT

Note:

When printing, the default is set to print all pages. To print pages individually, get desired drawing in view window and click print icon on toolbar. Select current page in the Print Range information in print dialog box. Then click OK button.

NEBRASKA STANDARD DRAWING	3 STRAND STANDARD POST AND WIRE FENCE	STANDARD DRAWING NO. NE500–10–001 APPROVED BY: TGH DRAWN BY: RXS Drawing revised: 12/06

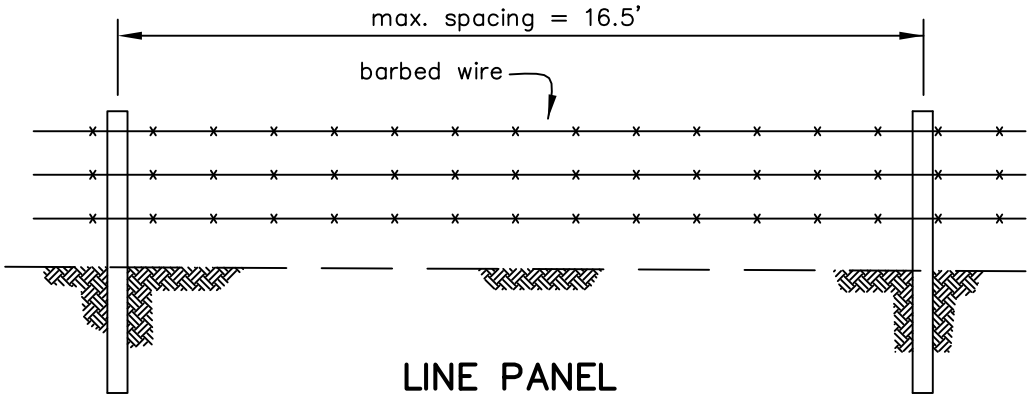

LINE PANEL

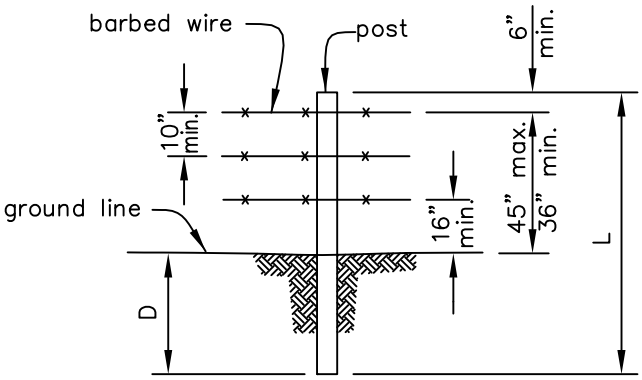

BARBED WIRE DETAIL

BARBED WIRE

Min. line wire diameter:
12.5 gauge conventional or
15.5 gauge high tensile.

2 twisted strands with 14 gauge or heavier two–point barbs on 5 inch or less centers (min.).

Type Z, Class 1 (min. or equiv.) zinc–coating as per ASTM A121.

LINE

Wood:
L = 6 1/2 ft. min.
D = 2 1/2 ft. min.
Dia. = 3 in. min.

Fiberglass:
L = 6 ft. min.
D = 18 in. min.
Dia. = 1 1/4 in. min.

Steel:
L = 6 ft. min.
D = 18 in. min.
Standard "T" or "U"; > 1.33 lbs/ft of length

CORNER OR GATE

Wood:
L = 8 ft. min.
D = 3 1/2 ft. min.
Dia. = 5 in. min.

Steel:
L = 7 ft. min.
D = 3 ft. min. (set in conc.)
Dia. = Round 2 3/8 in. O.D. or
Angle iron 2 1/2 x 2 1/2 x 1/4 (in.)

SPECIES for all wood: _____

SPECIAL INSTRUCTIONS

_____

_____

_____

_____

Modified from Washington LSK–0012.dwg

Drawing not to scale. Standardized drawing must be adapted to the specific site.

	JOB CLASS		Date
	CAD FILE NO. NE500–10–001.dwg	Designed	
		Drawn	
	SHEET OF	Checked	
U.S.D.A. – NATURAL RESOURCES CONSERVATION SERVICE		Approved	

NEBRASKA STANDARD DRAWING	4 STRAND STANDARD POST AND WIRE FENCE	STANDARD DRAWING NO. NE500–10–002 APPROVED BY: TGH DRAWN BY: RXS Drawing revised: 12/06

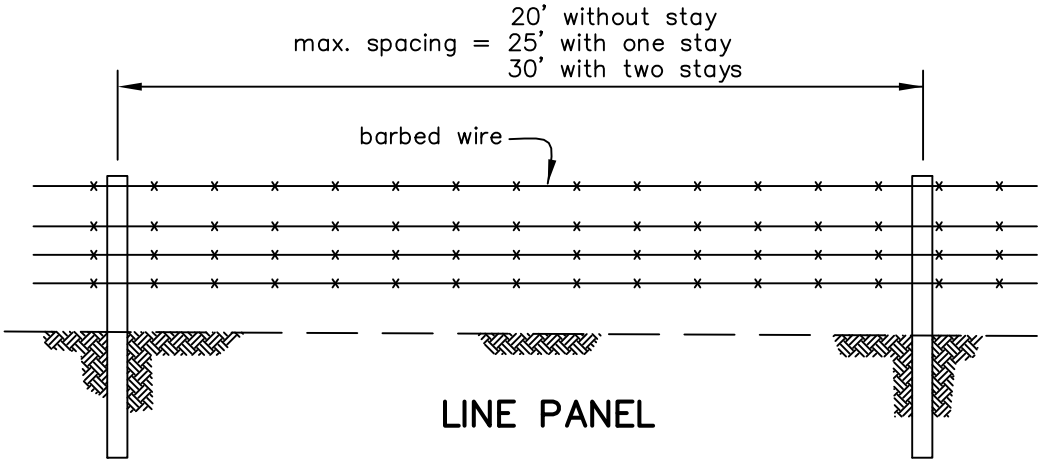

LINE PANEL

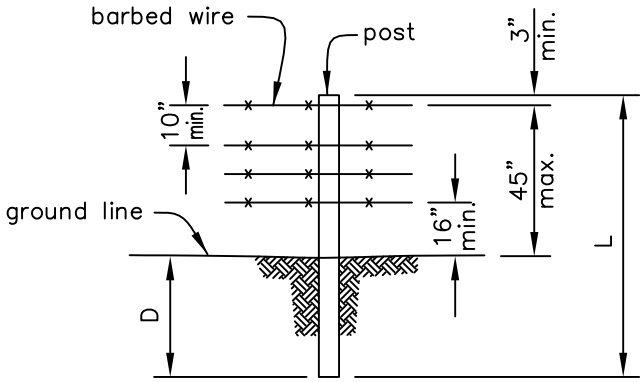

BARBED WIRE DETAIL

BARBED WIRE

Min. line wire diameter:
12.5 gauge conventional or
15.5 gauge high tensile.

2 twisted strands with 14 gauge or heavier two–point barbs on 5 inch or less centers (min.).

Type Z, Class 1 (min. or equiv.) zinc–coating as per ASTM A121.

LINE	Wood:	L = 6 1/2 ft. min. D = 2 1/2 ft. min. Dia. = 3 in. min.	Fiberglass:	L = 6 ft. min. D = 18 in. min. Dia. = 1 1/4 in. min.
	Steel:	L = 6 ft. min. D = 18 in. min. Standard "T" or "U"; > 1.33 lbs/ft of length		
CORNER OR GATE	Wood:	L = 8 ft. min. D = 3 1/2 ft. min. Dia. = 5 in. min.	Steel:	L = 7 ft. min. D = 3 ft. min. (set in conc.) Dia. = Round 2 3/8 in. O.D. or Angle iron 2 1/2 x 2 1/2 x 1/4 (in.)
STAYS	Wood: 1 1/2 in. dia. min. of durable wood Fiberglass: Any manufactured for this purpose Wire: 9.5 gauge, zinc coated, twisted, manufactured for this purpose			

SPECIES for all wood: _____

SPECIAL INSTRUCTIONS

_____

_____

_____

Modified from Washington LSK–0010.dwg

Drawing not to scale. Standardized drawing must be adapted to the specific site.

	JOB CLASS	Date
	CAD FILE NO. NE500–10–002.dwg	Designed _____
		Drawn _____
	SHEET OF	Checked _____
U.S.D.A. – NATURAL RESOURCES CONSERVATION SERVICE		Approved _____

NEBRASKA STANDARD DRAWING	WOVEN WIRE FENCE	STANDARD DRAWING NO. NE500–10–003 APPROVED BY: TGH DRAWN BY: RXS Drawing revised: 12/06

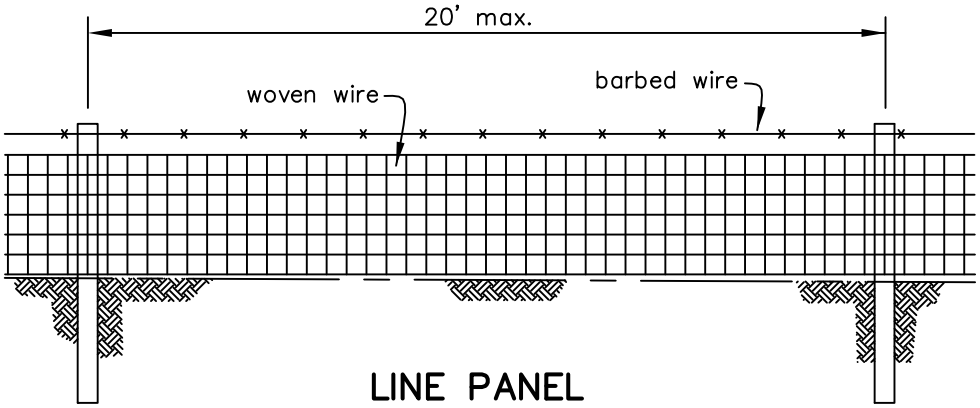

LINE PANEL

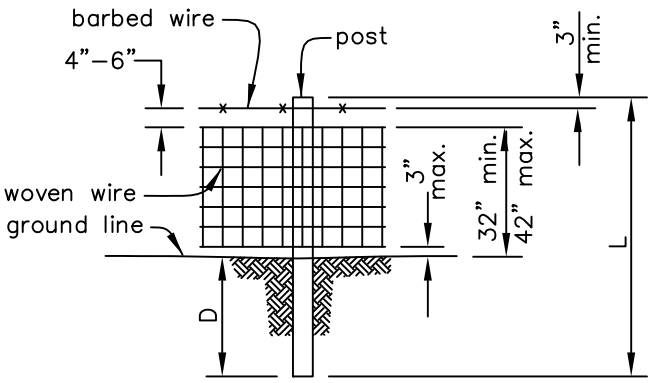

WOVEN WIRE W/ONE BARB DETAIL

WOVEN WIRE

Top and bottom wires shall be 12.5 gauge or heavier and line and stay wires shall be 14.5 gauge or heavier.

Type Z, Class 1 (min. or equiv.) zinc–coating as per ASTM A116.

The label shall indicate the woven wire meets ASTM A116 requirements.

BARBED WIRE

Min. line wire diameter:
12.5 gauge conventional or
15.5 gauge high tensile.

2 twisted strands with 14 gauge or heavier two–point barbs on 5 inch or less centers (min.).

Type Z, Class 1 (min. or equiv.) zinc–coating as per ASTM A121.

LINE	Wood:	L = 6 1/2 ft. min. D = 2 1/2 ft. min. Dia. = 3 in. min.	Steel:	L = 6 ft. min. D = 18 in. min. Standard "T" or "U"; ≥ 1.33 lbs/ft of length
CORNER OR GATE	Wood:	L = 8 ft. min. D = 3 1/2 ft. min. Dia. = 5 in. min.	Steel:	L = 7 ft. min. D = 3 ft. min. (set in conc.) Dia. = Round 2 3/8 in. O.D. or Angle iron 2 1/2 x 2 1/2 x 1/4 (in.)

SPECIES for all wood: _____

SPECIAL INSTRUCTIONS

_____

_____

_____

_____

Drawing not to scale. Standardized drawing must be adapted to the specific site.

Modified from Washington LSK–0020.dwg

	JOB CLASS	Date
	CAD FILE NO. NE500–10–003.dwg	Designed _____ _____
	SHEET OF	Drawn _____ _____
		Checked _____ _____
U.S.D.A. – NATURAL RESOURCES CONSERVATION SERVICE		Approved _____ _____

NEBRASKA STANDARD DRAWING	SUSPENSION FENCE	STANDARD DRAWING NO. NE500–20–001 APPROVED BY: TGH DRAWN BY: RXS Drawing revised: 12/06

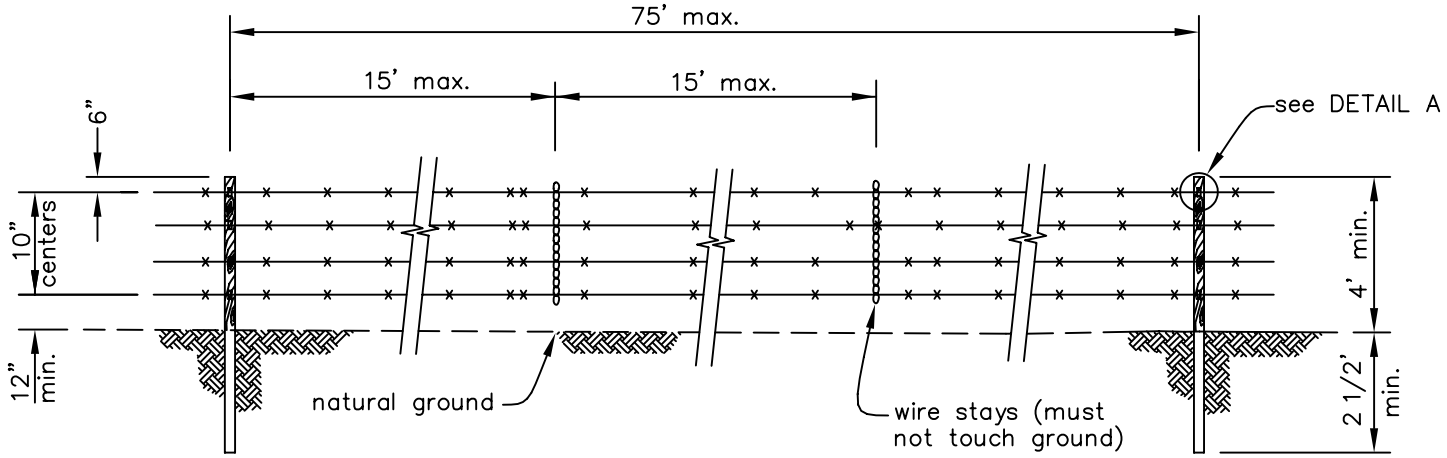

ELEVATION VIEW

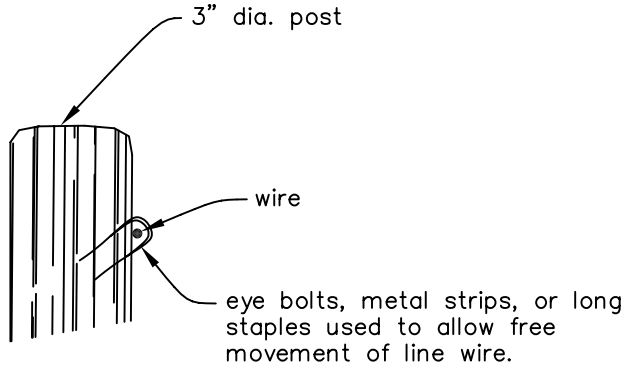

DETAIL A

RECOMMENDATIONS ON FASTENERS FOR TREATED WOOD

Fasteners for ACQ or CA treated wood should be galvanized in accordance with ASTM A153. Stainless steel can still be used for maximum service life.

Drawing not to scale. Standardized drawing must be adapted to the specific site.

Modified from Washington LSK–0230.dwg

	JOB CLASS	Date
	CAD FILE NO. NE500–20–001.dwg	Designed _____ _____
		Drawn _____ _____
	SHEET OF	Checked _____ _____
U.S.D.A. – NATURAL RESOURCES CONSERVATION SERVICE		Approved _____ _____

NEBRASKA STANDARD DRAWING	PERMANENT ELECTRIC FENCE	STANDARD DRAWING NO. NE500–30–001 APPROVED BY: TGH DRAWN BY: RXS Drawing revised: 9/07

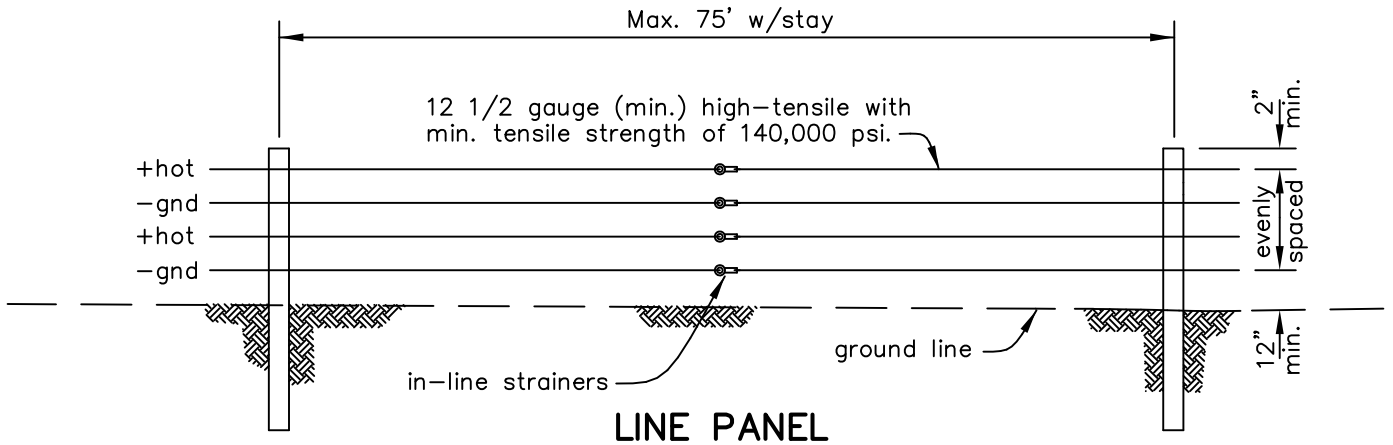

LINE PANEL

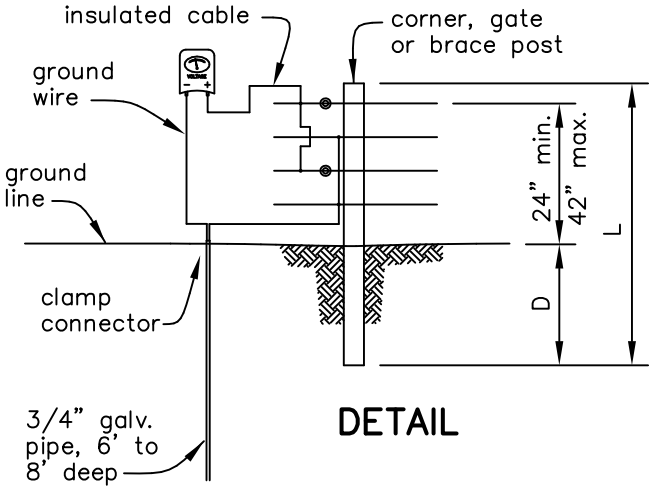

DETAIL

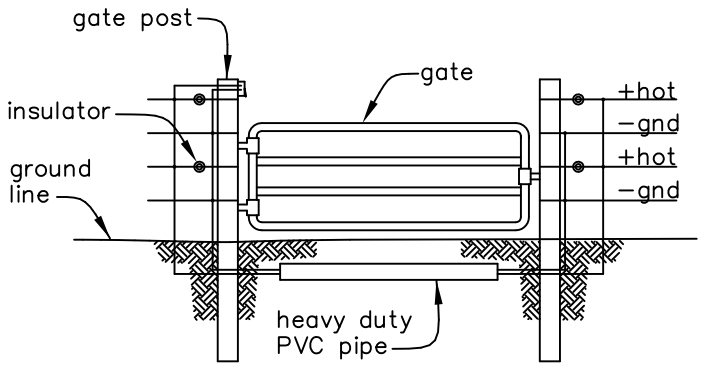

ROAD CROSSING DETAIL

SPACING AND POLARITY

LINE

Wood:
L = 6 1/2 ft. min.
D = 2 1/2 ft. min.
Dia. = 3 in. min.

Steel:
L = 6 ft. min.
D = 18 in. min.
Standard "T" or "U"; > 1.33 lbs/ft of length

Fiberglass:
L = 6 ft. min.
D = 18 in. min.
Dia. = 11/16 in. min.

WIRE

Type I (min. or equiv.) zinc coating as per ASTM A854.

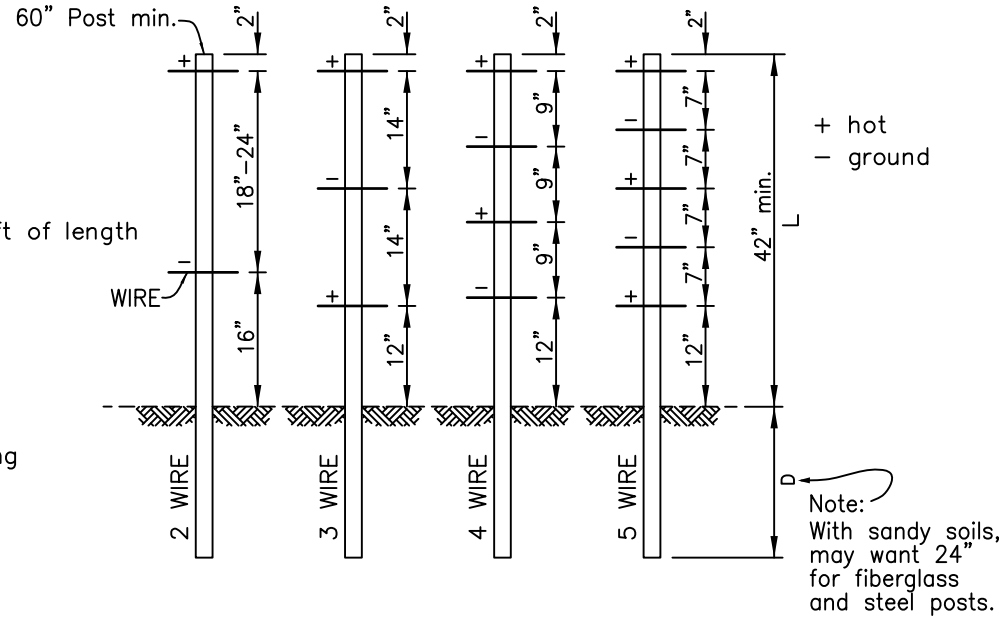

SPECIAL INSTRUCTIONS:

Drawing not to scale. Standardized drawing must be adapted to the specific site.

Modified from Washington LSK–0240.dwg

	JOB CLASS	Date
	CAD FILE NO. NE500–30–001.dwg	Designed
	SHEET OF	Drawn
		Checked
U.S.D.A. – NATURAL RESOURCES CONSERVATION SERVICE		Approved

NEBRASKA STANDARD DRAWING	WIRE FENCE BRACES	STANDARD DRAWING NO. NE500–40–001 APPROVED BY: TGH DRAWN BY: RXS Drawing revised: 12/06

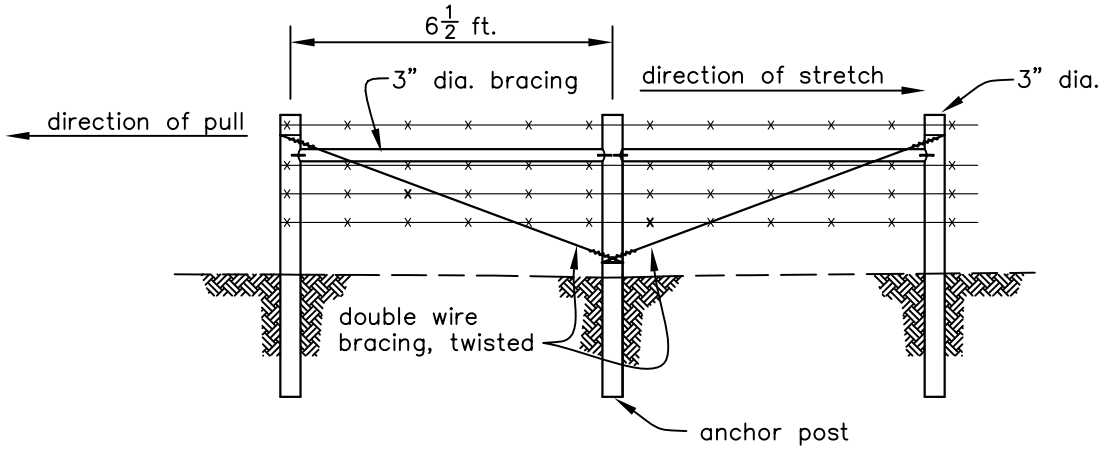

LINE BRACE

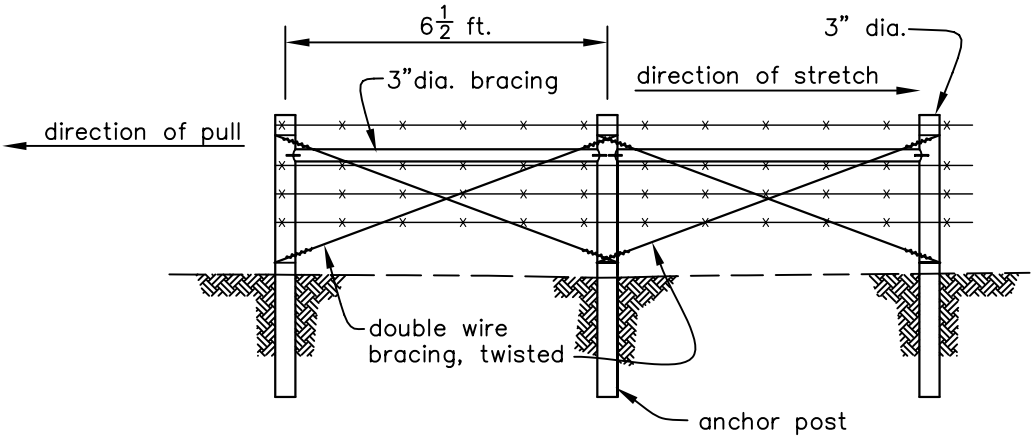

LINE BRACE

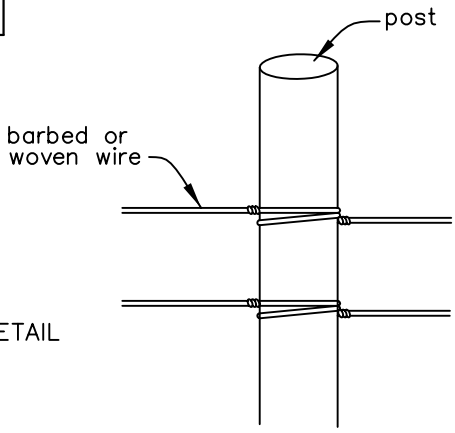

DETAIL

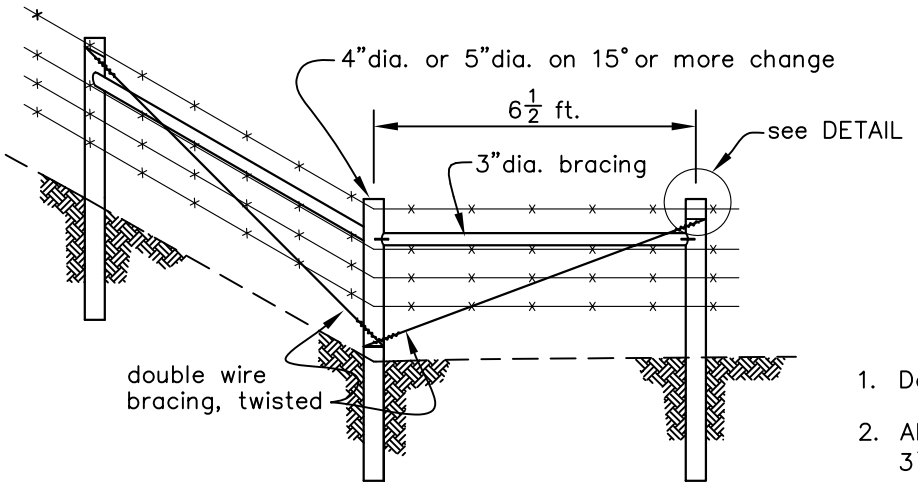

CORNER BRACE

1. Double wrap all bracing.
2. All brace posts to be 8' long, 3½ ft. min. embedment.

Drawing not to scale. Standardized drawing must be adapted to the specific site.

Modified from Washington LSK–0252.dwg

	JOB CLASS	Date
	CAD FILE NO. NE500–40–001.dwg	Designed ____ ____
		Drawn ____ ____
	SHEET OF	Checked ____ ____
U.S.D.A. – NATURAL RESOURCES CONSERVATION SERVICE		Approved ____ ____

NEBRASKA STANDARD DRAWING	WIRE FENCE BRACES	STANDARD DRAWING NO. NE500–40–002 APPROVED BY: TGH DRAWN BY: RXS ISSUE DATE: 07/01

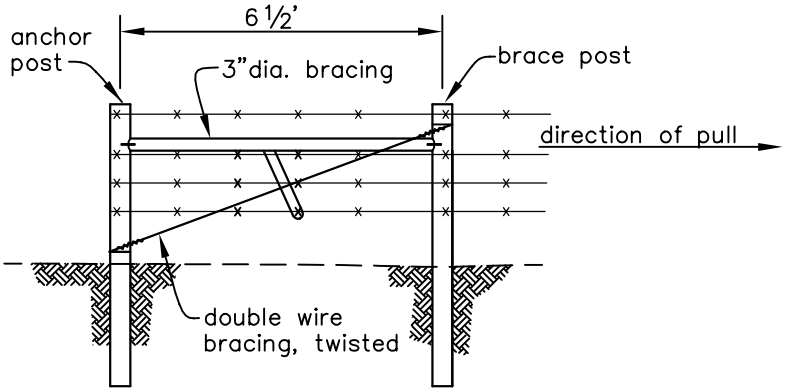

1–SPAN END

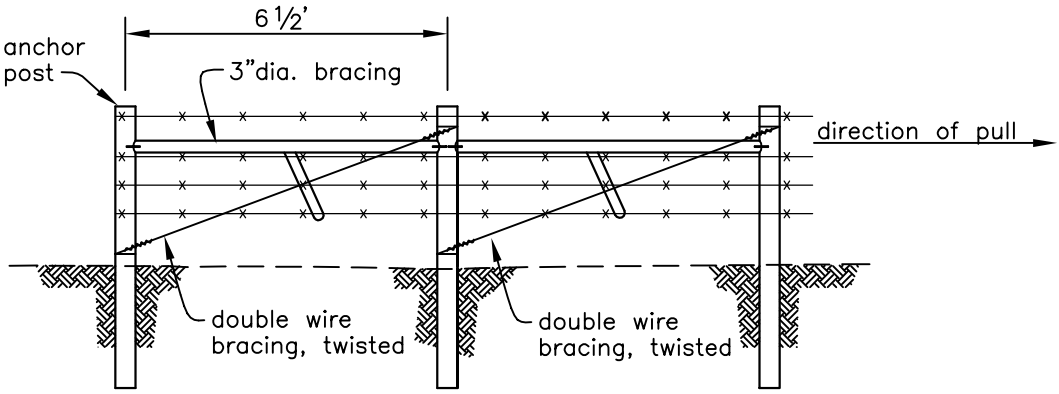

2–SPAN END

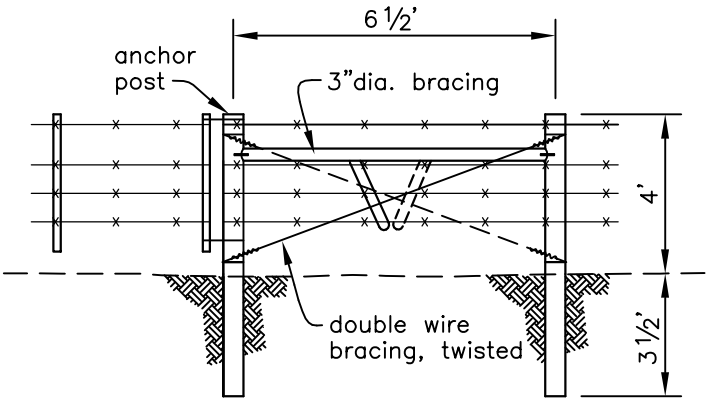

GATE BRACE

1. Double wrap all bracing.
2. All brace posts to be 8' long, 3 1/2" embedment.

Modified from Washington LSK–0251.dwg

Drawing not to scale. Standardized drawing must be adapted to the specific site.

	JOB CLASS	Date
	CAD FILE NO. NE500–40–002.dwg	Designed _____ _____
		Drawn _____ _____
	SHEET OF	Checked _____ _____
U.S.D.A. – NATURAL RESOURCES CONSERVATION SERVICE		Approved _____ _____

NEBRASKA STANDARD DRAWING	WIRE FENCE BRACES	STANDARD DRAWING NO. NE500–40–003 APPROVED BY: TGH DRAWN BY: RXS ISSUE DATE: 07/01

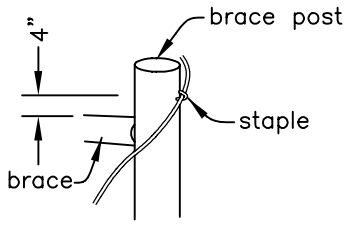

Drive staple about half its length into brace post about 4 inches above brace member on opposite side from brace.

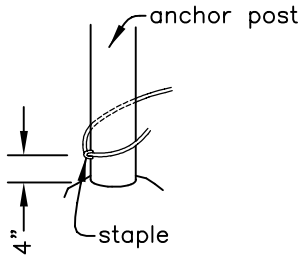

Drive staple in similar manner on anchor post about 4 inches from ground line opposite side of brace.

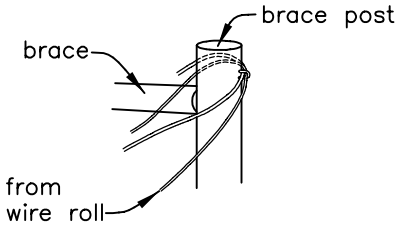

Unroll enough brace wire for two complete loops around anchor and brace post.

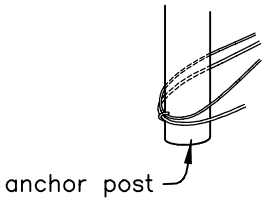

Thread end of brace wire through one staple and then through the other. Repeat to form three wire strands.

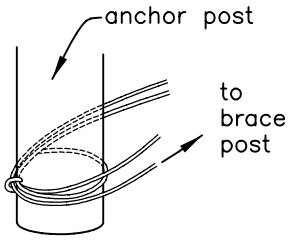

Wrap wire around anchor post and return toward brace post.

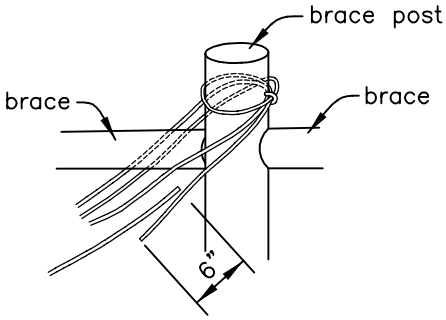

Cut brace wire from roll allowing enough wire to wrap around brace post and extend 6 to 12 inches past other wire end. Make splice.

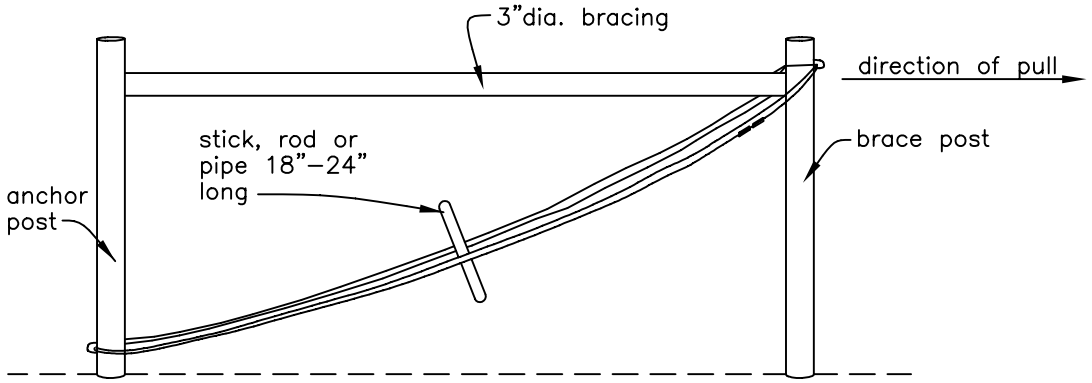

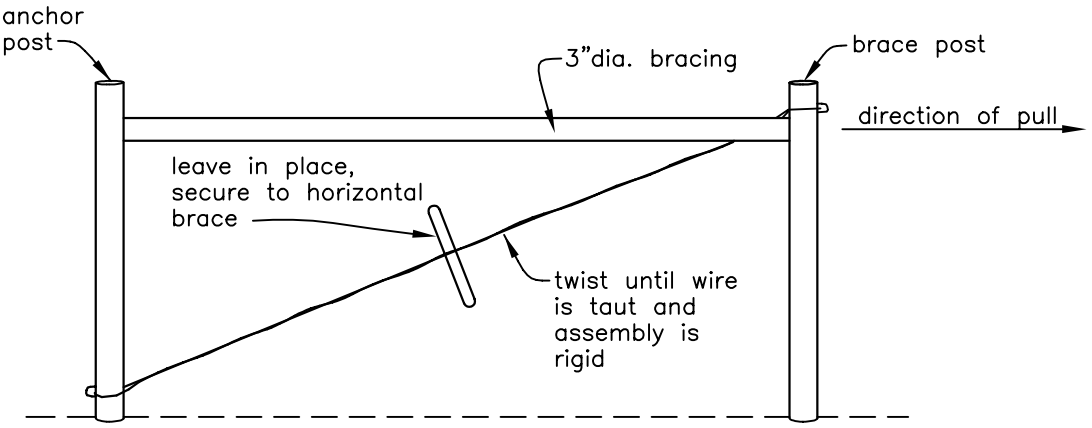

BRACE

Drawing not to scale. Standardized drawing must be adapted to the specific site.

Modified from Washington LSK–0250.dwg

	JOB CLASS	Date
	CAD FILE NO. NE500–40–003.dwg	Designed
		Drawn
	SHEET OF	Checked
U.S.D.A. – NATURAL RESOURCES CONSERVATION SERVICE		Approved

NEBRASKA STANDARD DRAWING	BARBED WIRE FENCE CROSSINGS	STANDARD DRAWING NO. NE500–50–001 APPROVED BY: TGH DRAWN BY: RXS ISSUE DATE: 07/01

Panels of woven wire or board can be used. Panels built separate and tied to fence with light wire, then during floods ends can break loose and not disturb main fencelines.

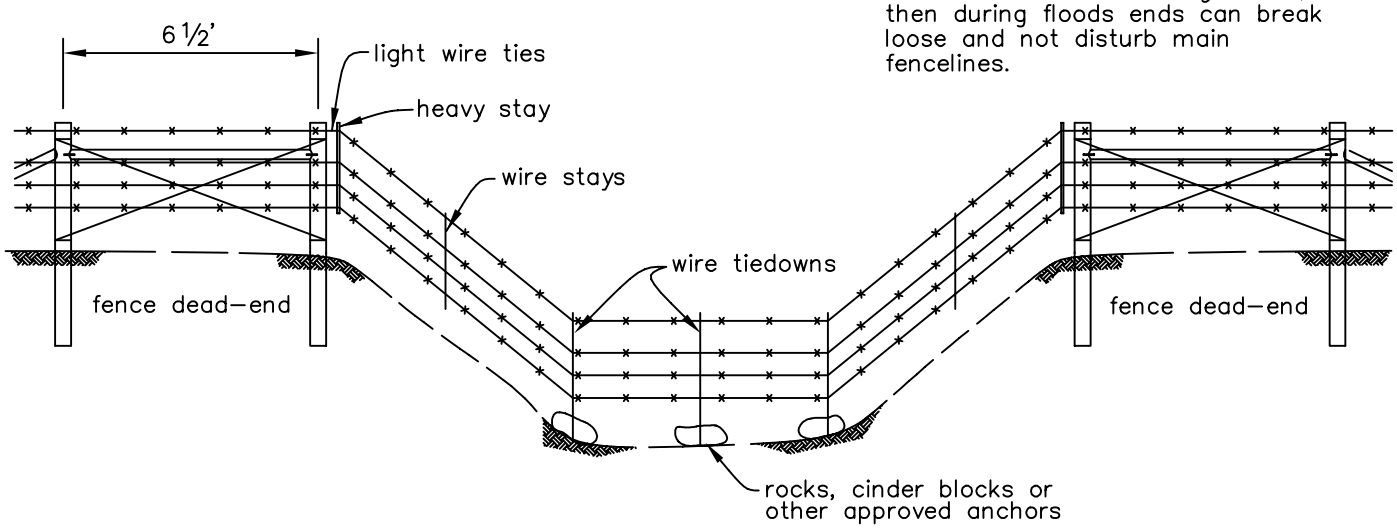

DETACHABLE WIRE PANEL WITH ANCHORS FOR DEEP WASHES AND LIVE STREAMS

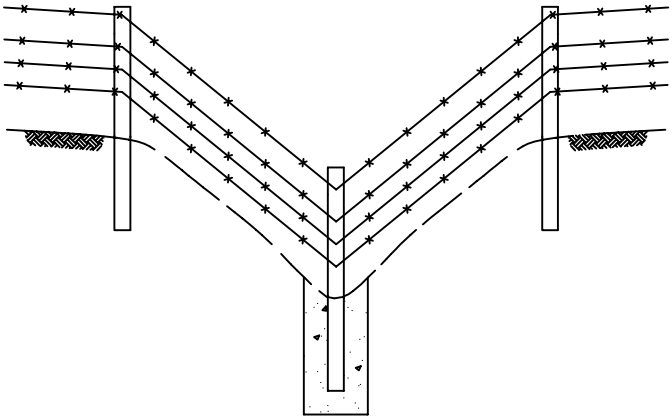

All corner and brace posts shall be 8' long and 3 1/2' embedment.

FENCE POST ANCHOR

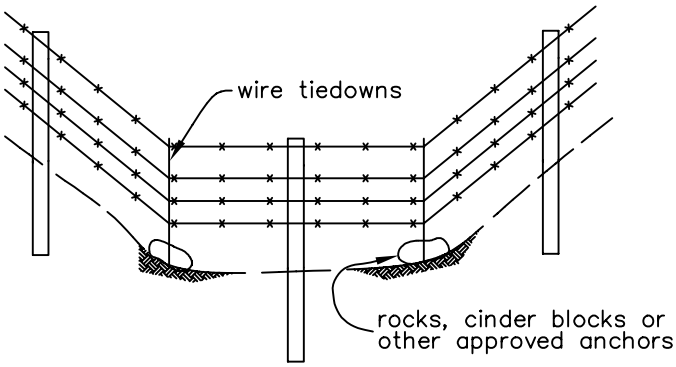

ANCHORS IN DRY DRAWS

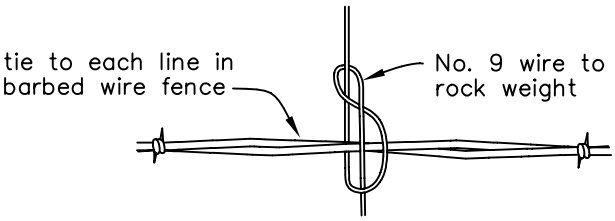

TIEDOWN DETAIL

Modified from Washington LSK–0210.dwg

Drawing not to scale. Standardized drawing must be adapted to the specific site.

	JOB CLASS	Date
	CAD FILE NO. NE500–50–001.dwg	Designed _____ _____
		Drawn _____ _____
	SHEET OF	Checked _____ _____
U.S.D.A. – NATURAL RESOURCES CONSERVATION SERVICE		Approved _____ _____

NEBRASKA STANDARD DRAWING	STAPLES AND WIRE ATTACHMENT	STANDARD DRAWING NO. NE500–60–001 APPROVED BY: TGH DRAWN BY: RXS Drawing revised: 9/07

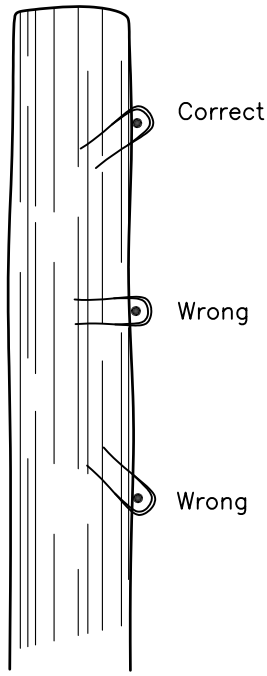

(WIRE PULL IS DOWN)

DRIVE STAPLES AT ANGLE

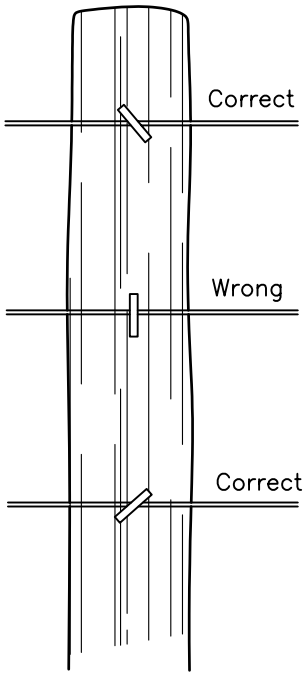

DO NOT DRIVE STAPLES PARALLEL TO SIDE OF POST

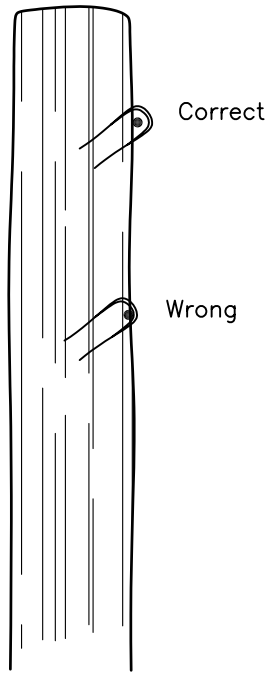

LEAVE WIRE LOOSE IN STAPLE

ATTACHMENT

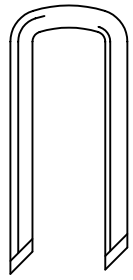

a) No. 9 gauge bright U–shaped staple, 1–3/4"

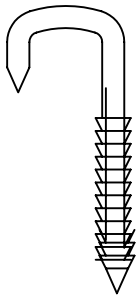

b) No. 9 gauge bright L–shaped deformed shank staple, 1–1/2"

STAPLES

RECOMMENDATIONS ON FASTENERS FOR TREATED WOOD
Fasteners for ACQ or CA treated wood should be galvanized in accordance with ASTM A153. Stainless steel can still be used for maximum service life.

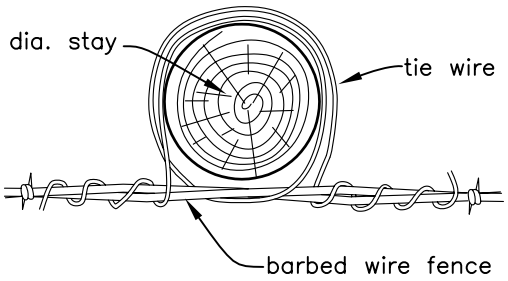

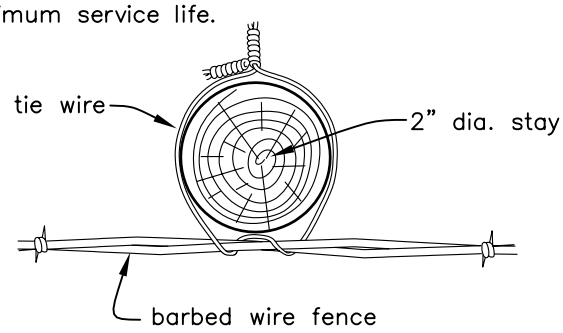

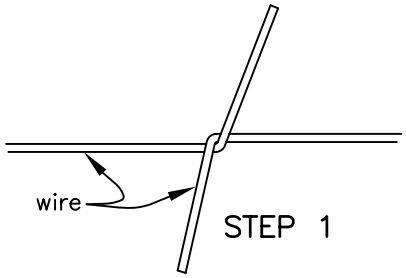

STEP 1

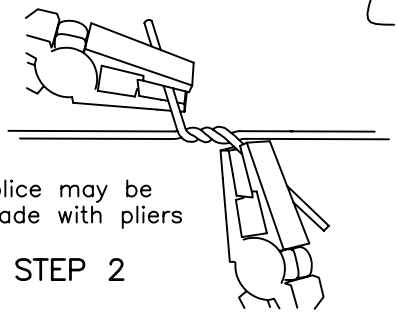

splice may be made with pliers

STEP 2

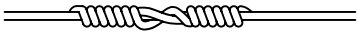

completed splice

STEP 3

"WESTERN UNION" SPLICE

Drawing not to scale. Standardized drawing must be adapted to the specific site.

Modified from Washington LSK–0001.dwg

	JOB CLASS	Date
	CAD FILE NO. NE500–60–001.dwg	Designed _____ _____
	SHEET OF	Drawn _____ _____
		Checked _____ _____
U.S.D.A. – NATURAL RESOURCES CONSERVATION SERVICE		Approved _____ _____

NEBRASKA STANDARD DRAWING	METAL GATE CLOSER	STANDARD DRAWING NO. NE500–60–002 APPROVED BY: TGH DRAWN BY: RXS ISSUE DATE: 07/01

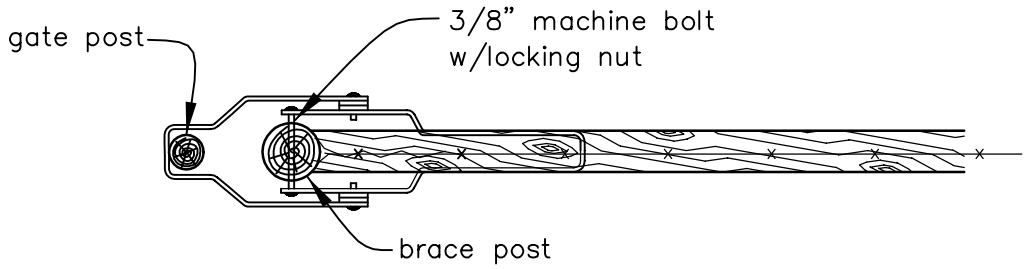

PLAN VIEW
(closed position)

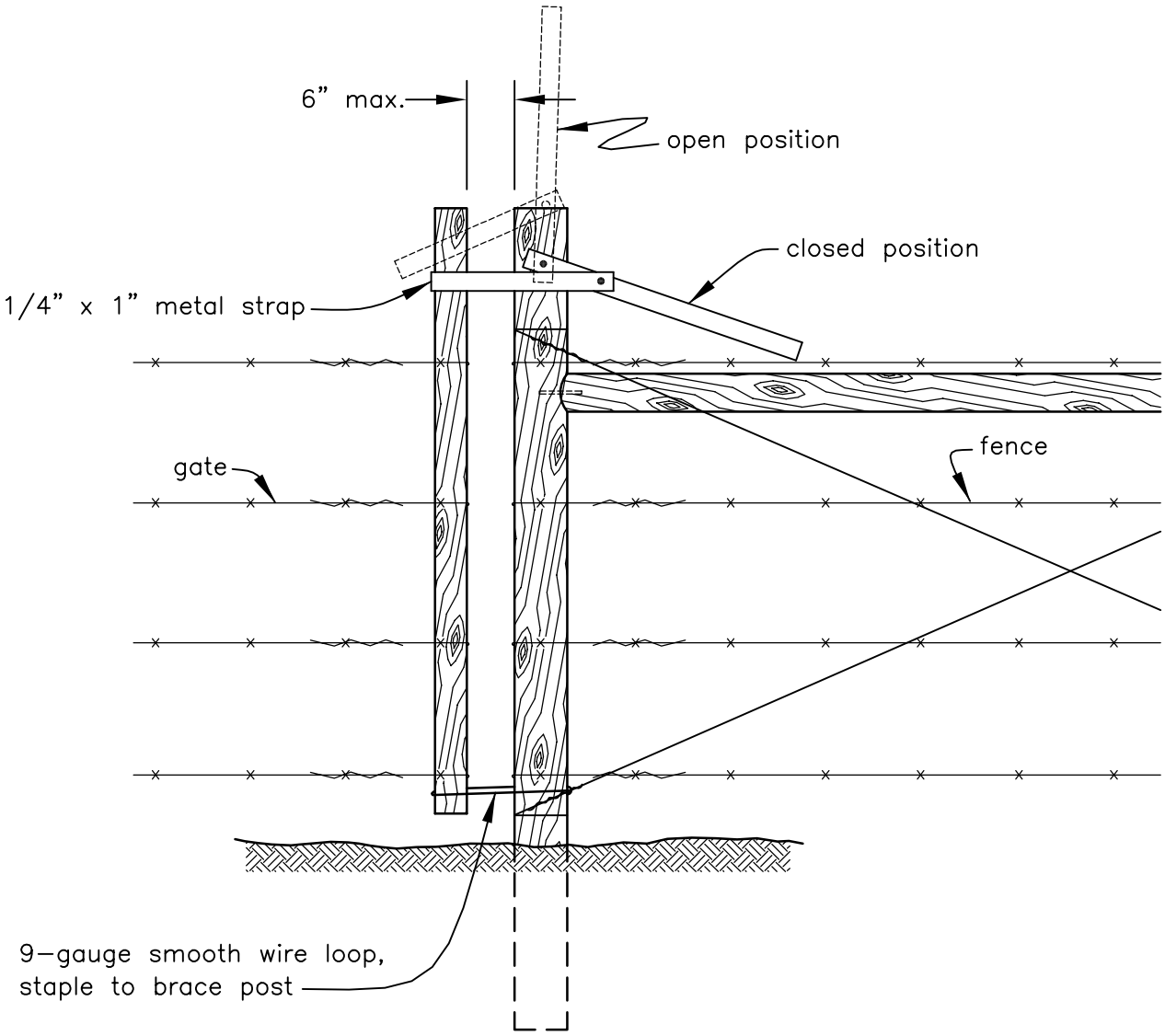

ELEVATION

Drawing not to scale. Standardized drawing must be adapted to the specific site.

Modified from Washington LSK–0041.dwg

	JOB CLASS	Date
	CAD FILE NO. NE500–60–002.dwg	Designed _____ _____
		Drawn _____ _____
	SHEET OF	Checked _____ _____
U.S.D.A. – NATURAL RESOURCES CONSERVATION SERVICE		Approved _____ _____

NEBRASKA STANDARD DRAWING	METAL GATE CLOSER	STANDARD DRAWING NO. NE500–60–003 APPROVED BY: TGH DRAWN BY: RXS ISSUE DATE: 07/01

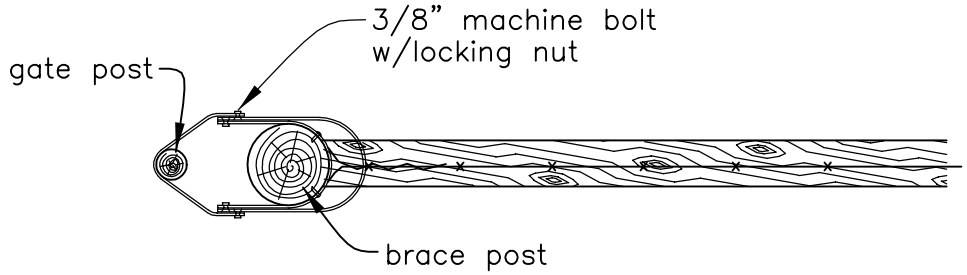

PLAN VIEW

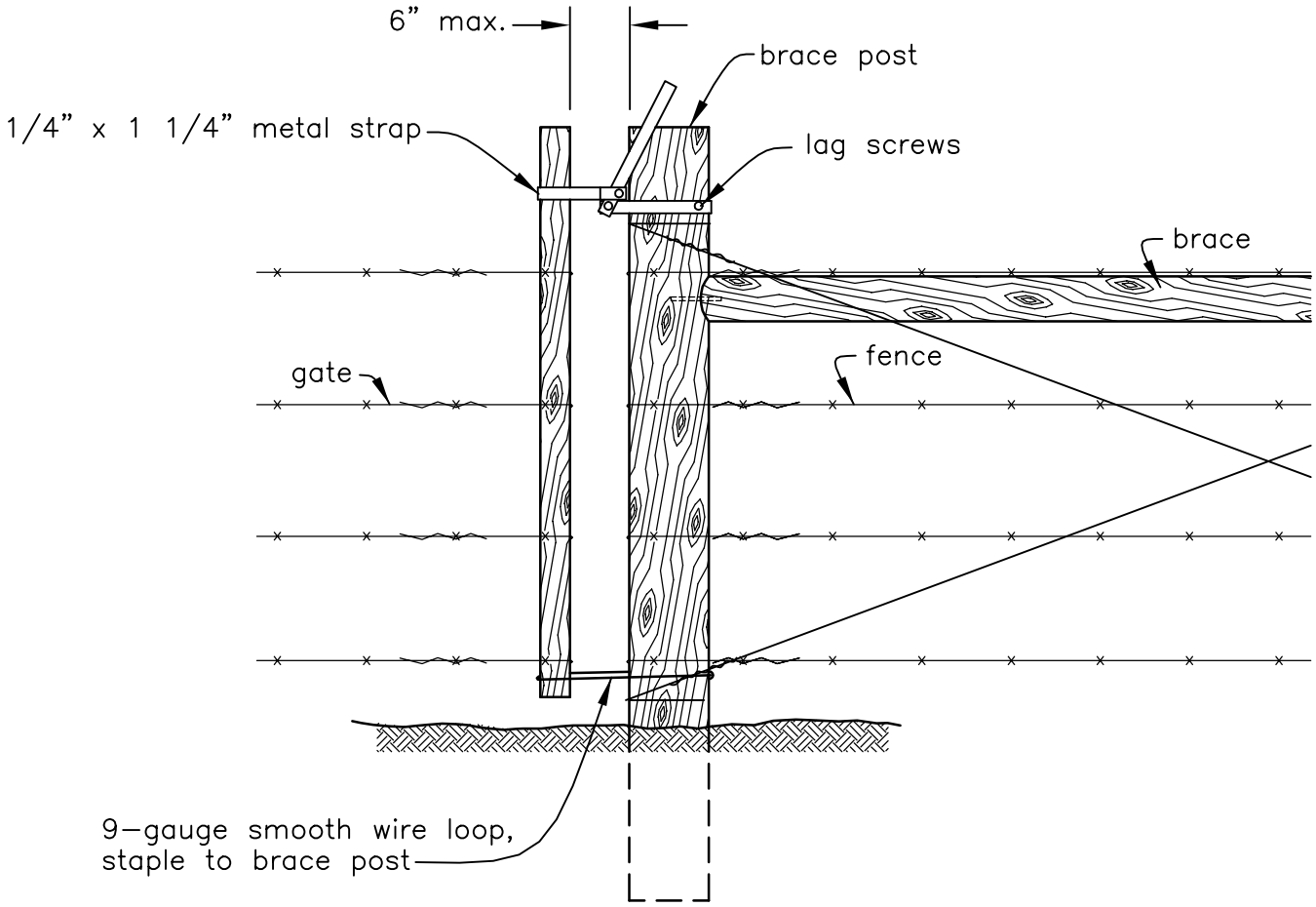

ELEVATION

Drawing not to scale. Standardized drawing must be adapted to the specific site.

Modified from Washington LSK–0041.dwg

	JOB CLASS	Date
	CAD FILE NO. NE500–60–003.dwg	Designed _____ _____
		Drawn _____ _____
	SHEET OF	Checked _____ _____
U.S.D.A. – NATURAL RESOURCES CONSERVATION SERVICE		Approved _____ _____