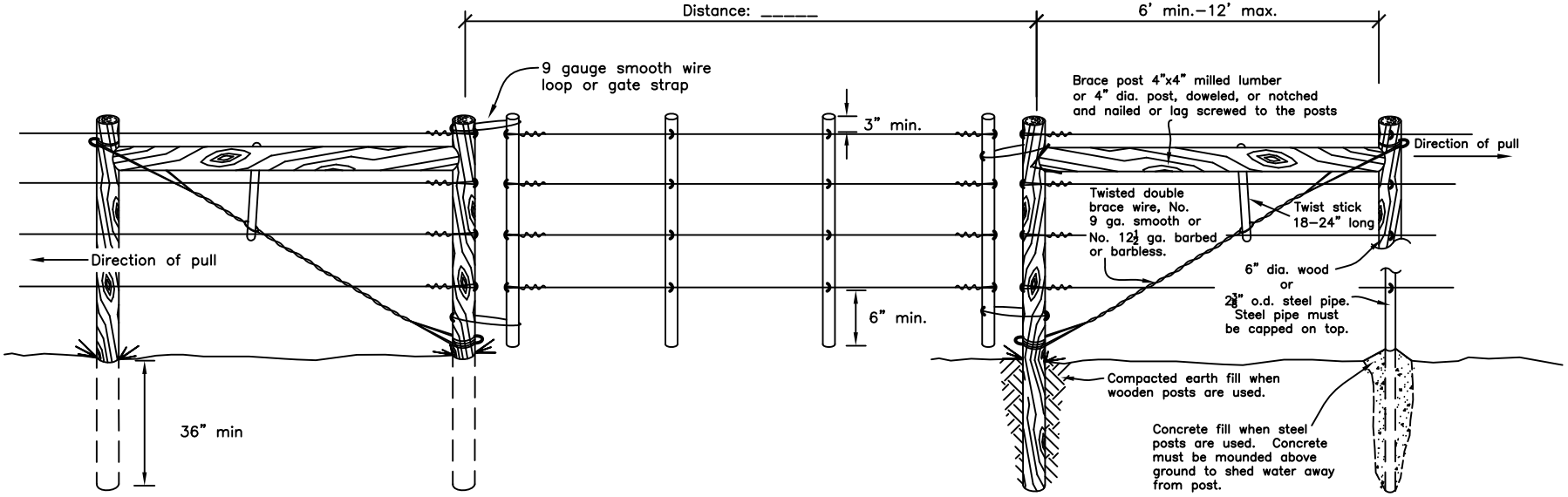

Not to Scale

Designed _____ Date _____
Drawn _____
Checked _____
Approved _____

Gate Assembly

FIELD(S): _____ CIN#: _____
F.O.: _____ COUNTY: _____ N.M.

USDA United States Department of Agriculture
Natural Resources Conservation Service