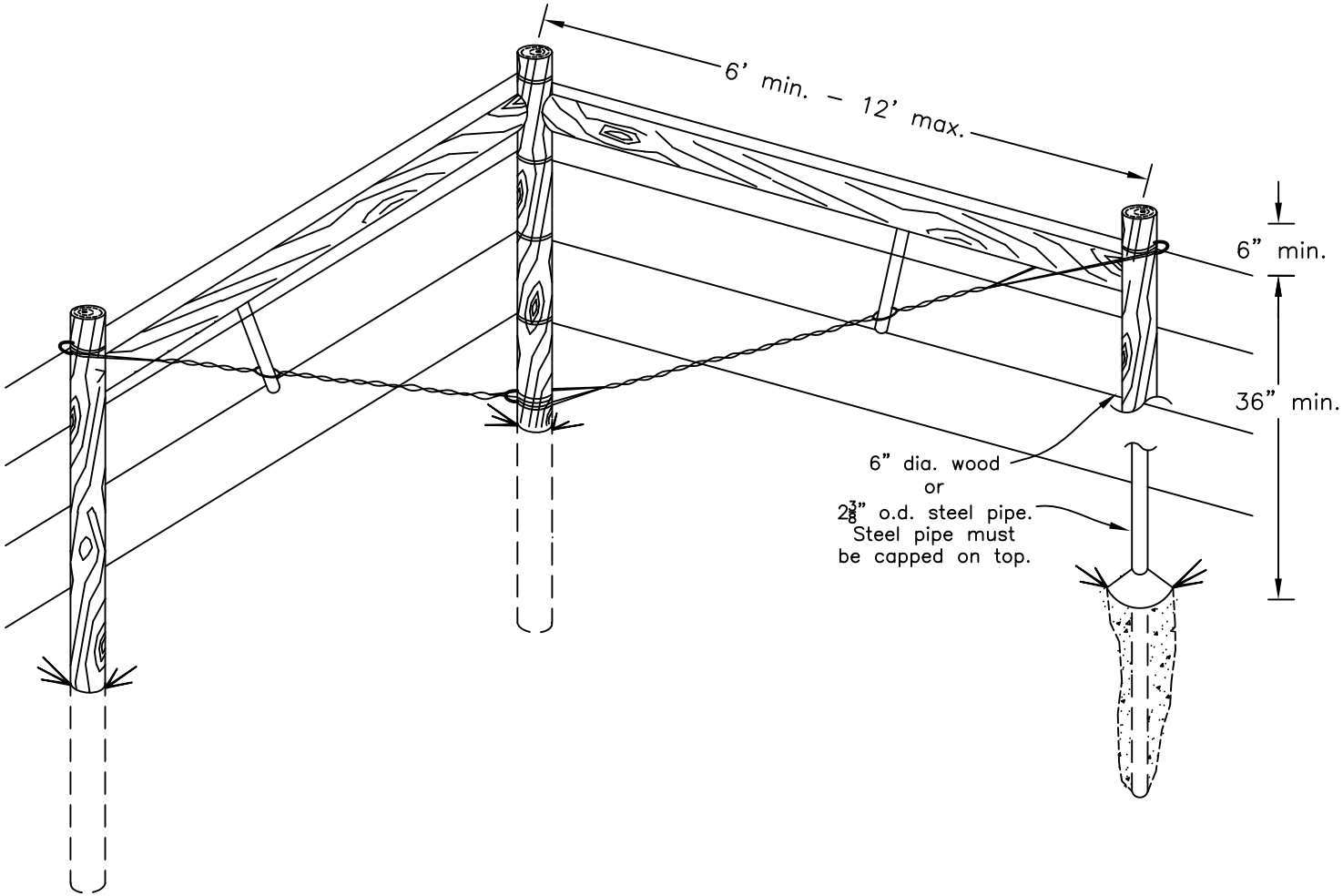

Not to Scale

Date

Designed _____

Drawn _____

Checked _____

Approved _____

Single Span Corner Brace Assembly

FIELD(S): _____ CIN#: _____

F.O.: _____ COUNTY: _____ N.M.

USDA United States Department of Agriculture

Natural Resources Conservation Service