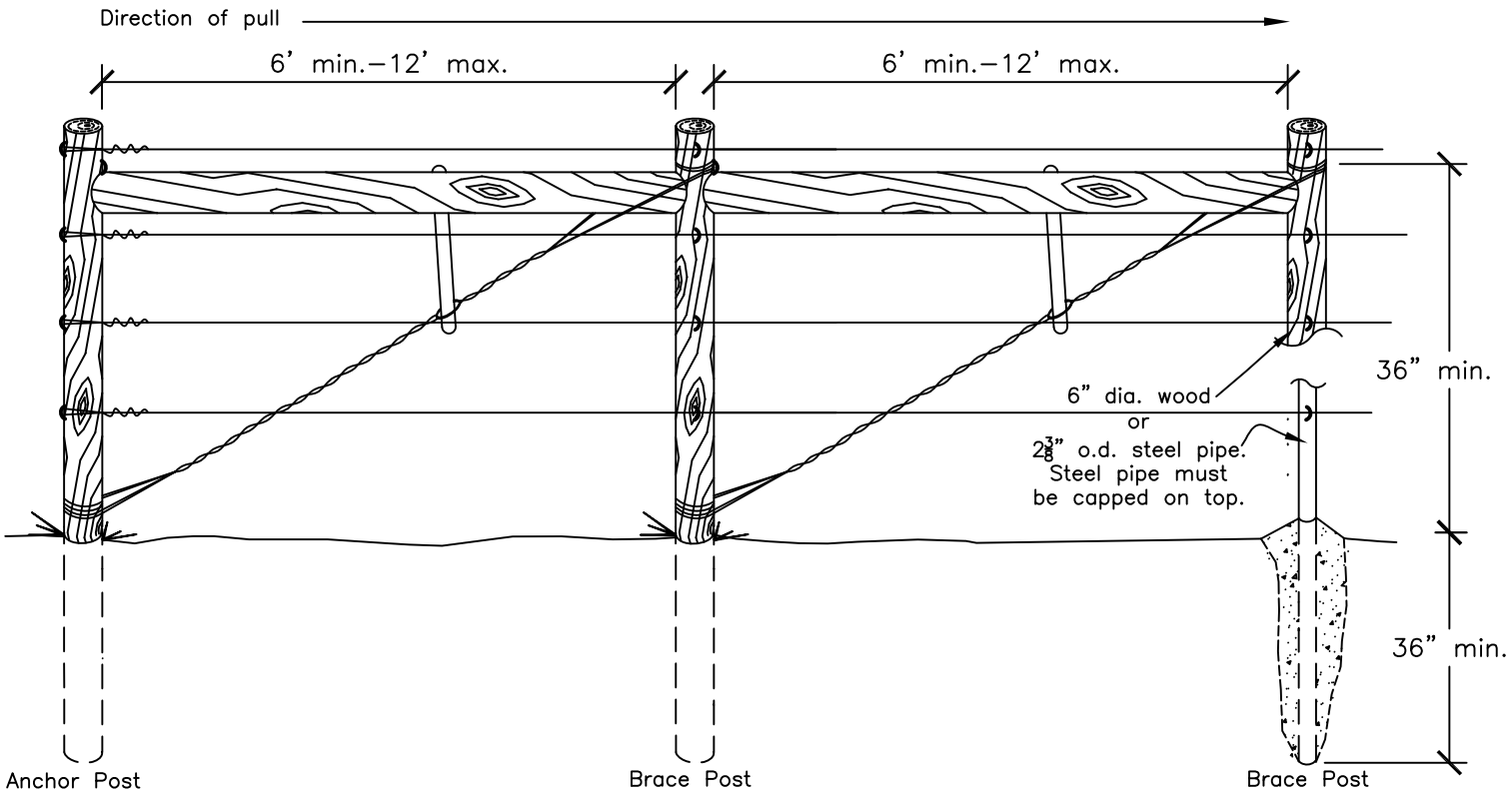

Not to Scale

Date

Designed

Drawn

Checked

Approved

Double Span Assembly for Line Bracing

FIELD(S): CIN#:

F.O.: COUNTY: N.M.

USDA United States Department of Agriculture

Natural Resources Conservation Service