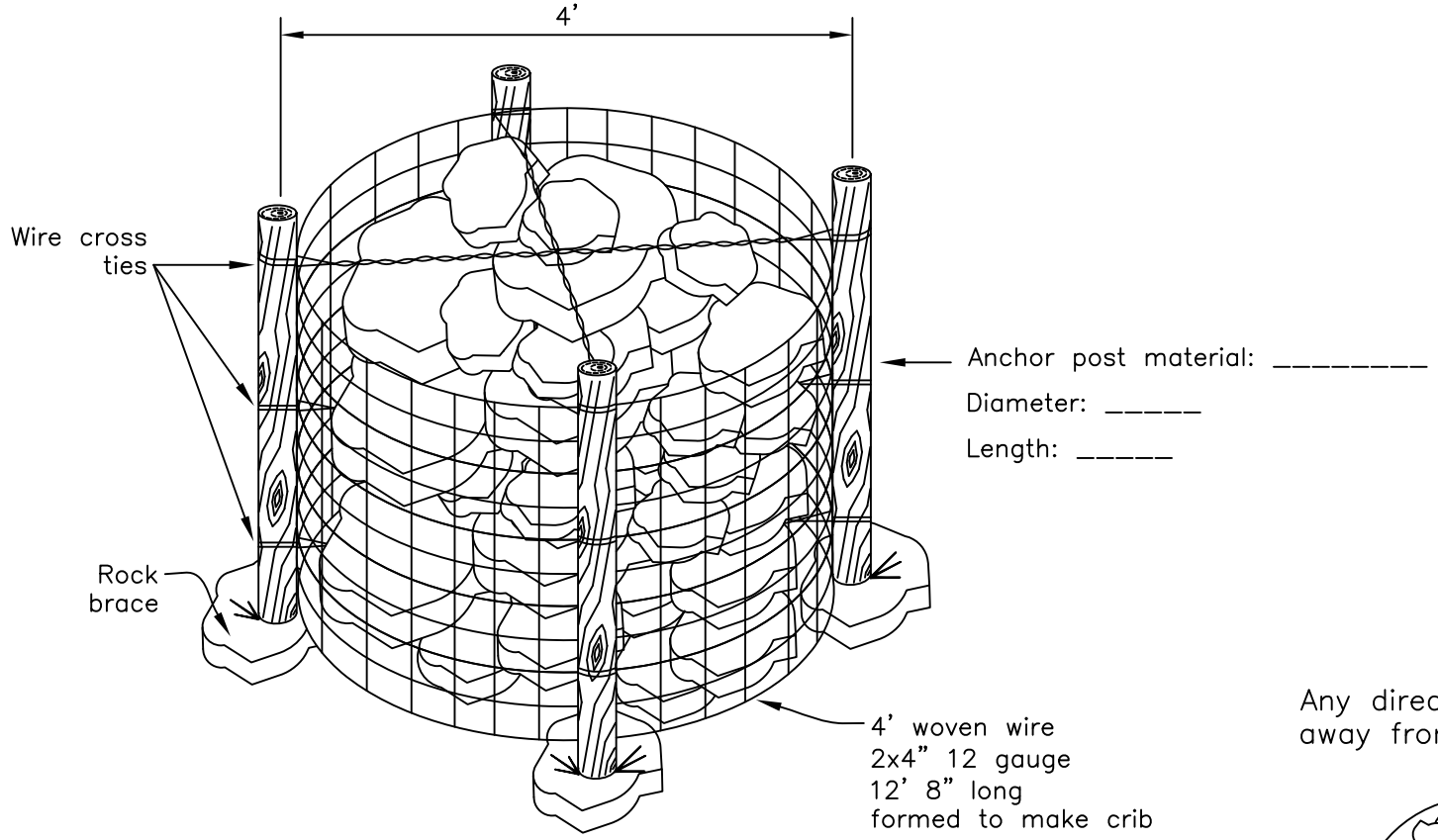

Any direction of pull away from posts

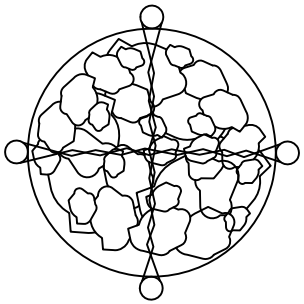

TOP VIEW

Not to Scale

Designed ____ Date ____
Drawn ____
Checked ____
Approved ____

Rock Crib

FIELD(S): _____ CIN#: _____

F.O.: _____ COUNTY: _____ N.M.

USDA United States Department of Agriculture
Natural Resources Conservation Service