Photo by New Mexico Department of Game and Fish

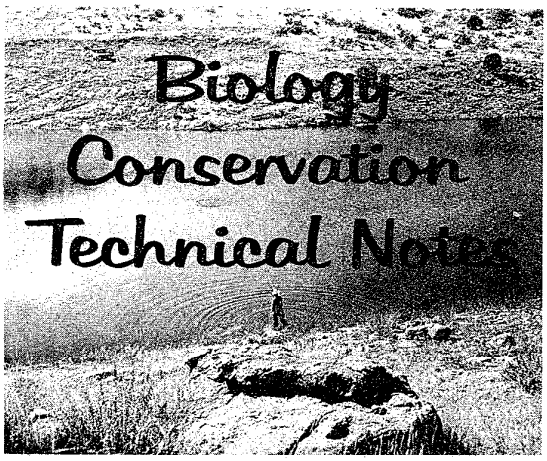

Photo by New Mexico Department of Game and Fish

U. S. DEPARTMENT OF AGRICULTURE NEW MEXICO SOIL CONSERVATION SERVICE

RECORD COPY

BIOLOGY NOTE NO. 9

July 25, 1967

Subject: WILDLIFE WATERING FACILITIES

Attached are seven standard designs for wildlife watering facilities. There are several others available commercially.

These can be used as guidelines or ideas for developing wildlife water facilities as required by the standards and specifications for the Practice Wildlife Watering Facility (Code - 648).

To:
AC's, WUC's
Verne Davison, WRTSC
Dean Marriage, WRTSC
Niner, Lohmiller, PMC, Los Lunas
Dan Merkel, Santa Fe
E. L. Roget
J. G. Douglas (8)
J. York, P. Haverkamp, Area Biol.

PREFABRICATED METAL WATER COLLECTING APRON for WILDLIFE WATERING FACILITY

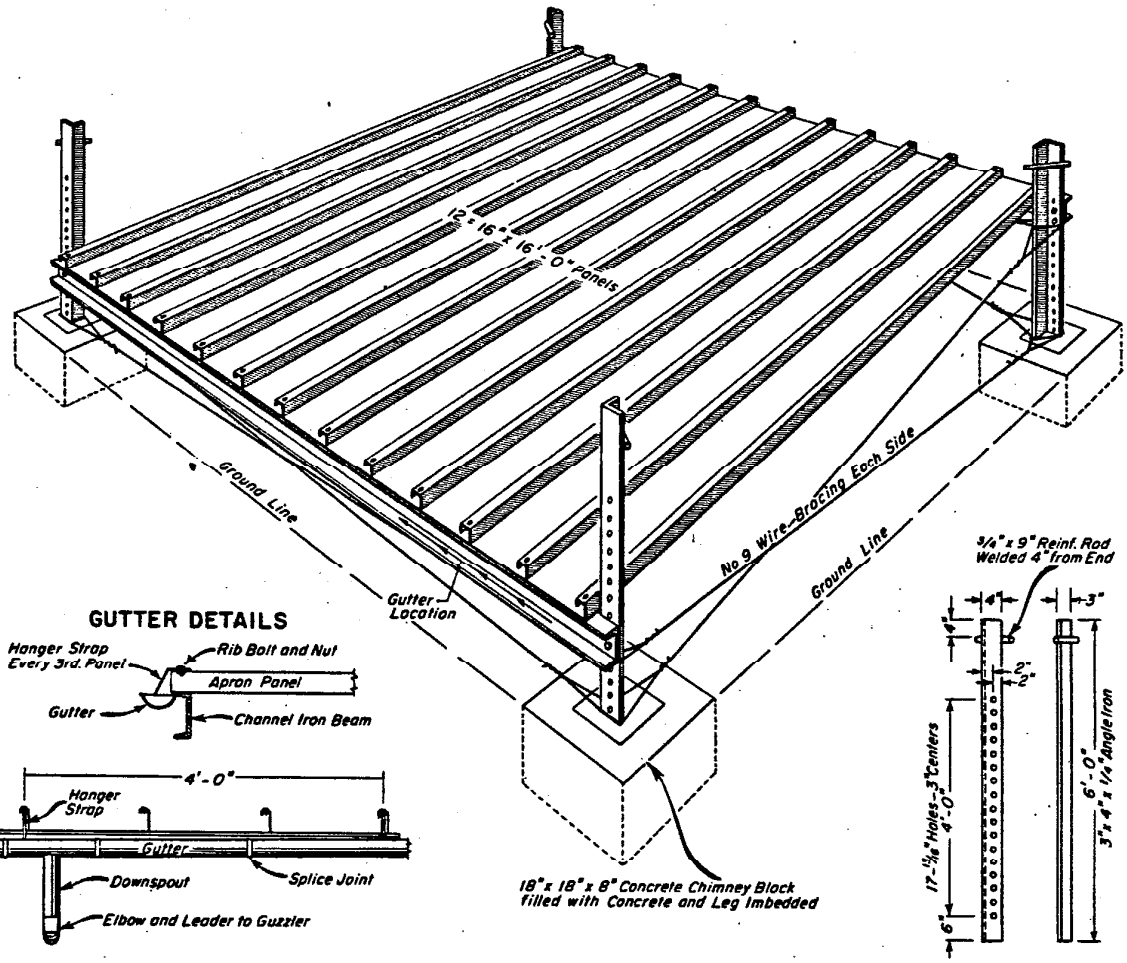

GUTTER DETAILS

LEG

MAKE 2 AS SHOWN AND 2 OPPOSITE HAND

BEAM

2 REQUIRED

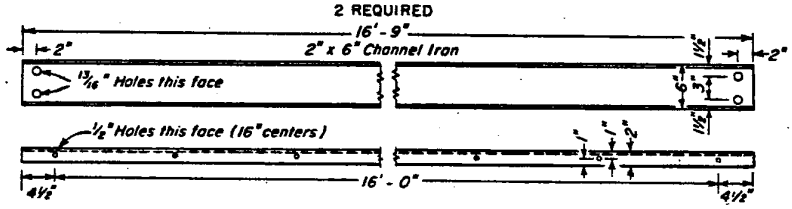

PANEL

12 REQUIRED

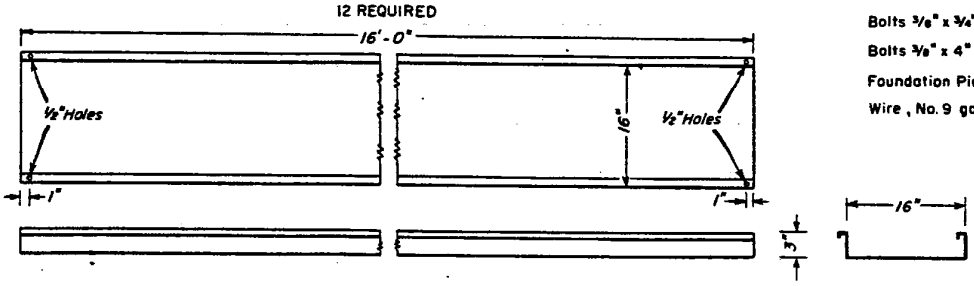

BILL of MATERIALS

[6" x 2" x 8.2 lb. x 16'-9"	2 each
L 4" x 3" x 1/4" x 6'-0"	4 each
Panels 16" x 16'-0" #362	12 each
Bolts 3/4" x 1 1/4" machine w/hex nut and s-lock washer	8 each
Bolts 3/8" x 1 1/4" mach. w/hex nut	24 each
Bolts 3/8" x 3/4" w/rib nut	22 each
Bolts 3/8" x 4" mach. w/hex nut	2 each
Foundation Piers	4 each
Wire, No. 9 galvanized	15 lbs.

NOT AVAILABLE FROM CARTOGRAPHIC UNIT

Copies may be secured from:

Washington Field Biologist (Western)
Berkeley, California

U.S. DEPARTMENT OF AGRICULTURE- SOIL CONSERVATION SERVICE

7-L-14000-95

M-2430-95

LAMINATED PLASTIC SELF-FILLING WILDLIFE WATERING FACILITY

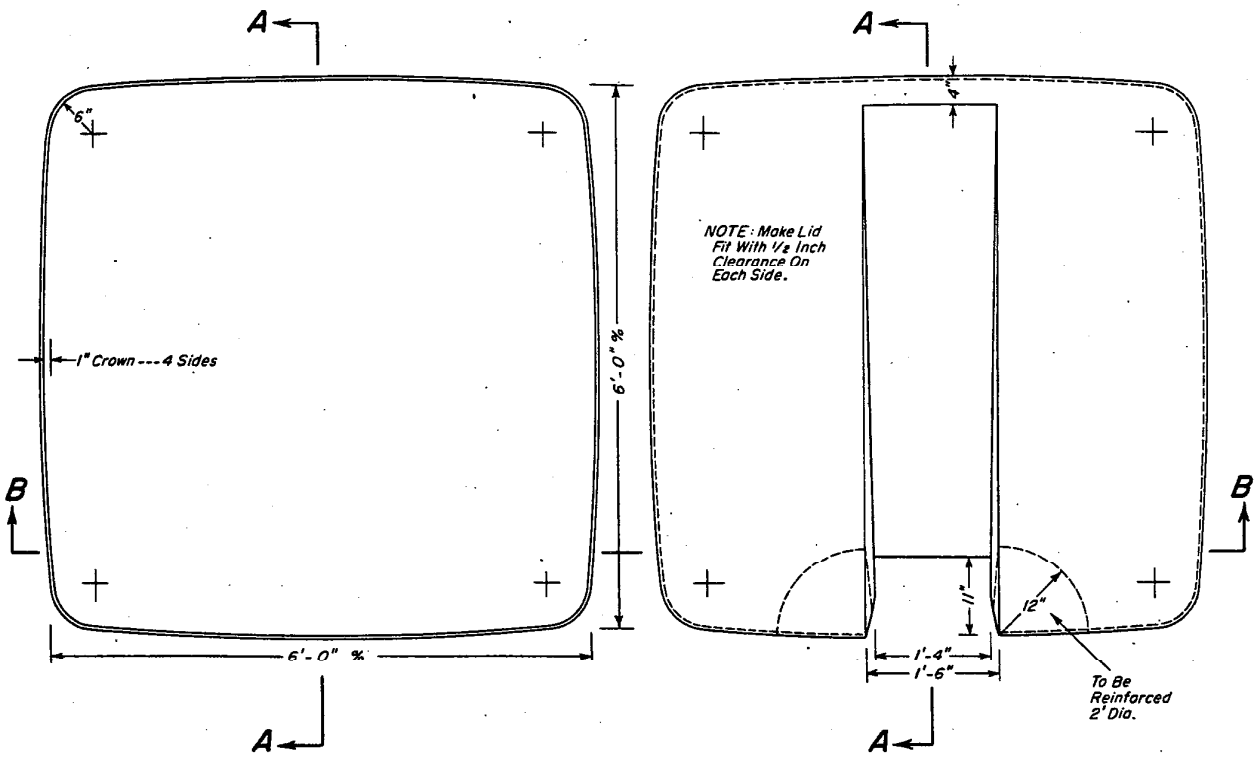

PLAN - CISTERN

PLAN - LID

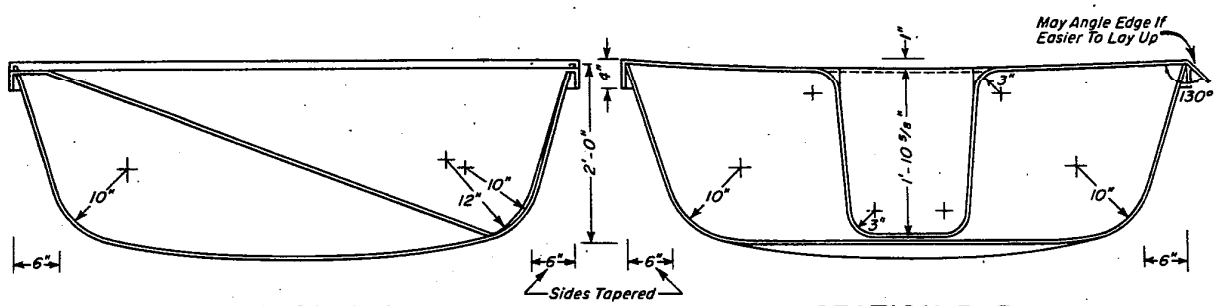

SECTION A-A

SECTION B-B

12 0 12 24 36
SCALE IN INCHES

USDA SCS PORTLAND OREG 1990 M-2430-96

TEMPORARY WILDLIFE WATERING FACILITY

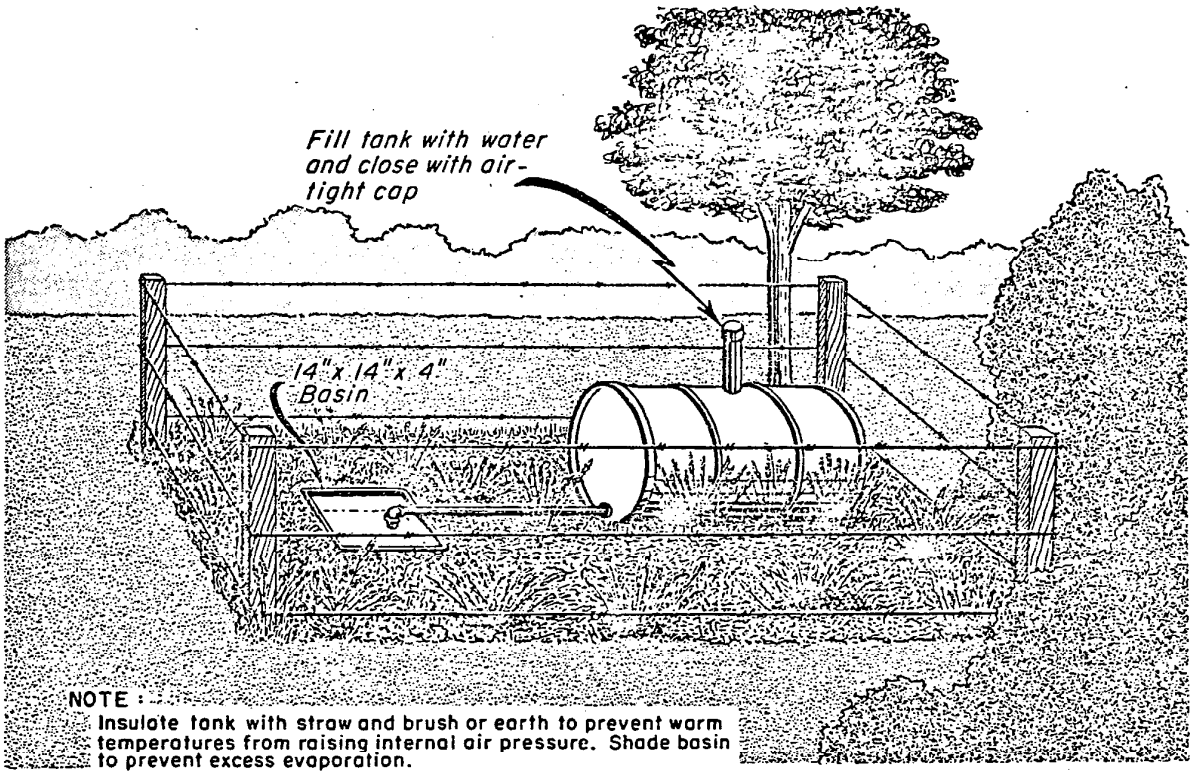

WATER COLLECTING APRONS FOR SELF-FILLING WILDLIFE WATERING FACILITY

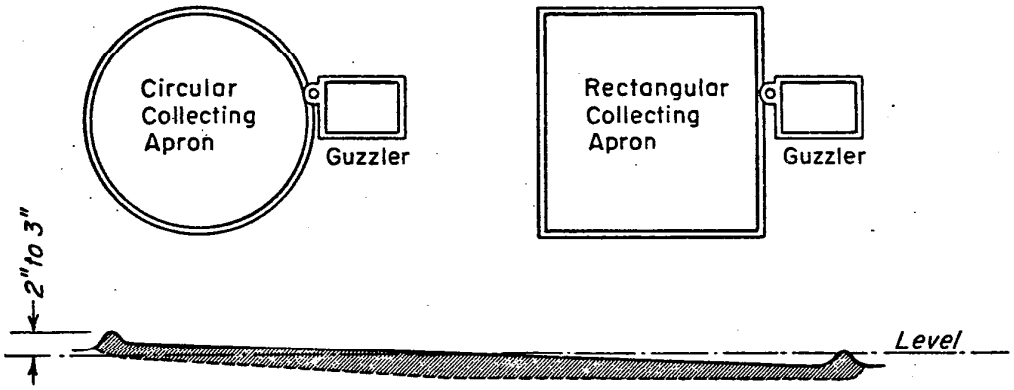

Soil Cement, Coated with Asphalt Emulsion

To Make Apron :
(1) Shape and smooth area.
(2) Cover evenly with dry cement at rate of 1 sack for each 50 square feet, <u>except</u> on heavy clay soils, where use 1 sack for each 30 square feet.
(3) Rake in thoroughly 2 1/2 - 3 inches.
(4) Sprinkle thoroughly till soil is wet 6 inches deep.
(5) Paint or spray with asphalt emulsion as soon as possible after cement is set - always within 24 hours.

Copies may be secured from:

Washington Field Biologist (Western)
Berkeley, California

USDA-SCS-PORTLAND, OREG. 1960 M-2430-98

CORRUGATED METAL SELF - FILLING WILDLIFE WATERING FACILITY

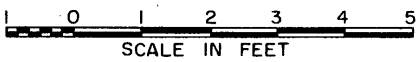

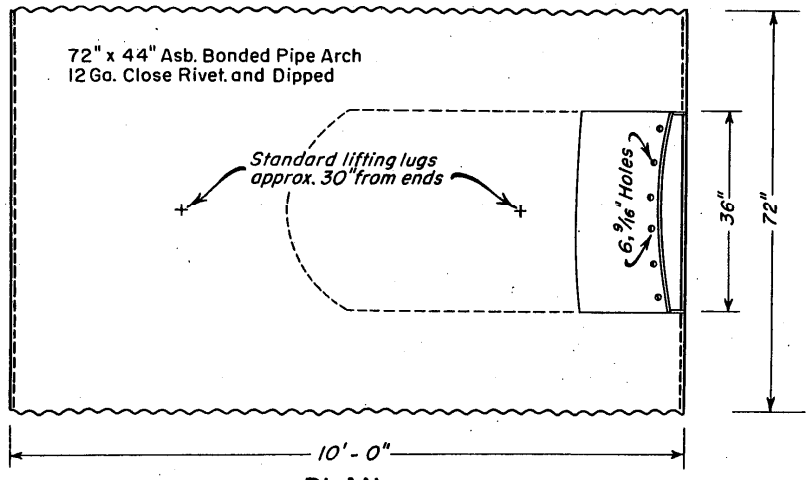

PLAN

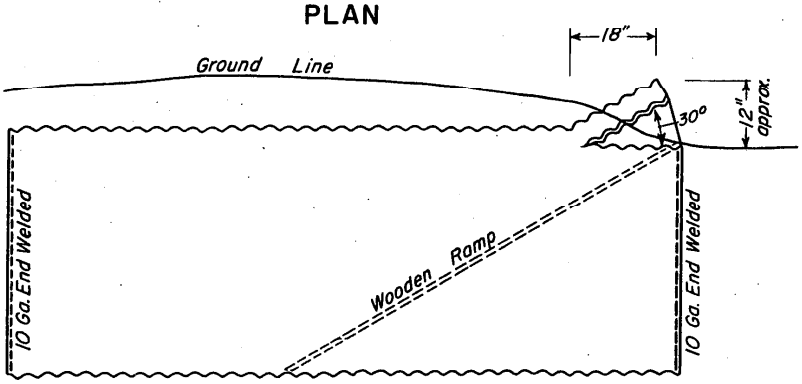

ELEVATION

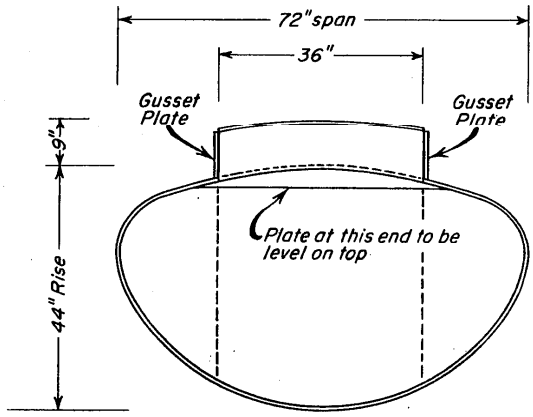

FRONT END VIEW

U.S. DEPARTMENT OF AGRICULTURE - SOIL CONSERVATION SERVICE

7-L-14000-98

CONCRETE SELF-FILLING WILDLIFE WATERING FACILITY

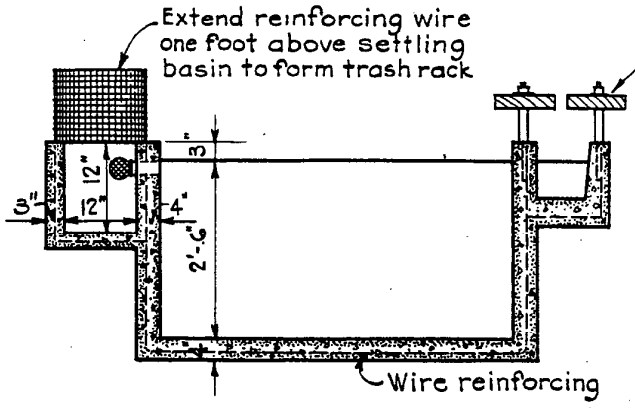

SECTION B-B

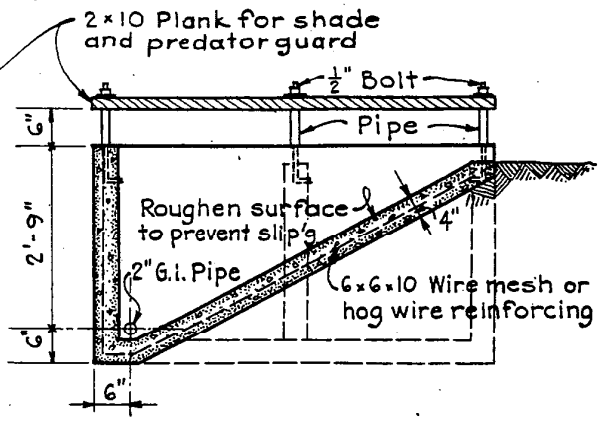

SECTION C-C

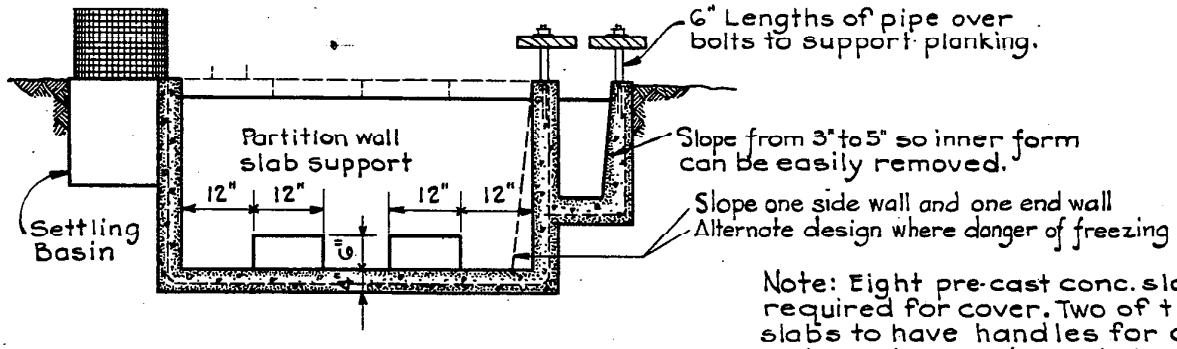

SECTION A-A

Note: Eight pre-cast conc. slabs required for cover. Two of the slabs to have handles for convenience in removing and cleaning tank.

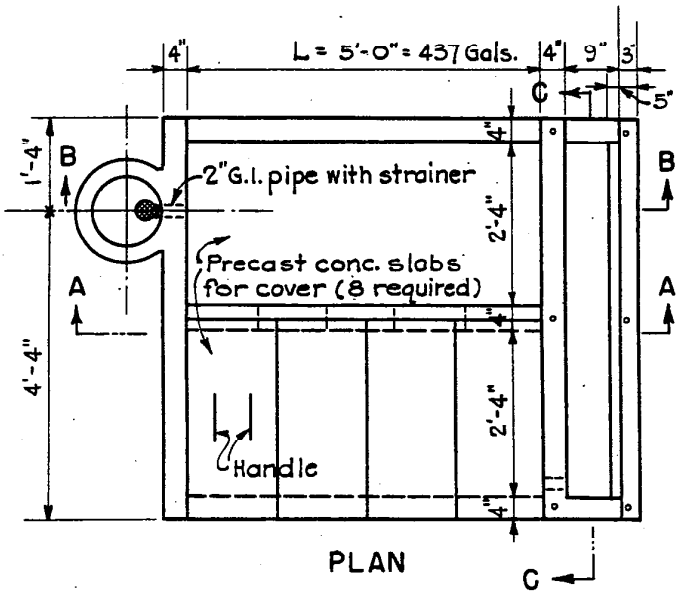

PLAN

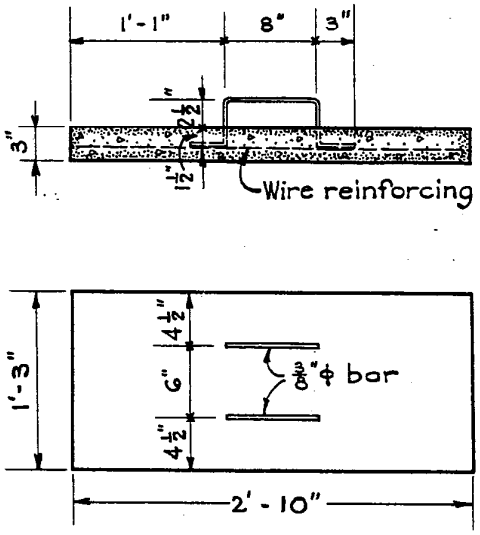

COVER SLAB DETAIL

Where min. annual rainfall is 10" or over use 500 gal. tank. Length = 6'-3"
Where min. annual rainfall is 5" to 10" use 750 gal. tank. Length = 8'-9"
Where min. annual rainfall is less than 5" use 1000 gal. tk. Length = 11'-3"

Copies may be secured from:

Washington Field Biologist (Western)
Berkeley, California

USDA-SCS-PORTLAND, OREG. 1966 M-2430-99

WILDLIFE WATERING FACILITY NEAR SPRING BOX -- No. 1

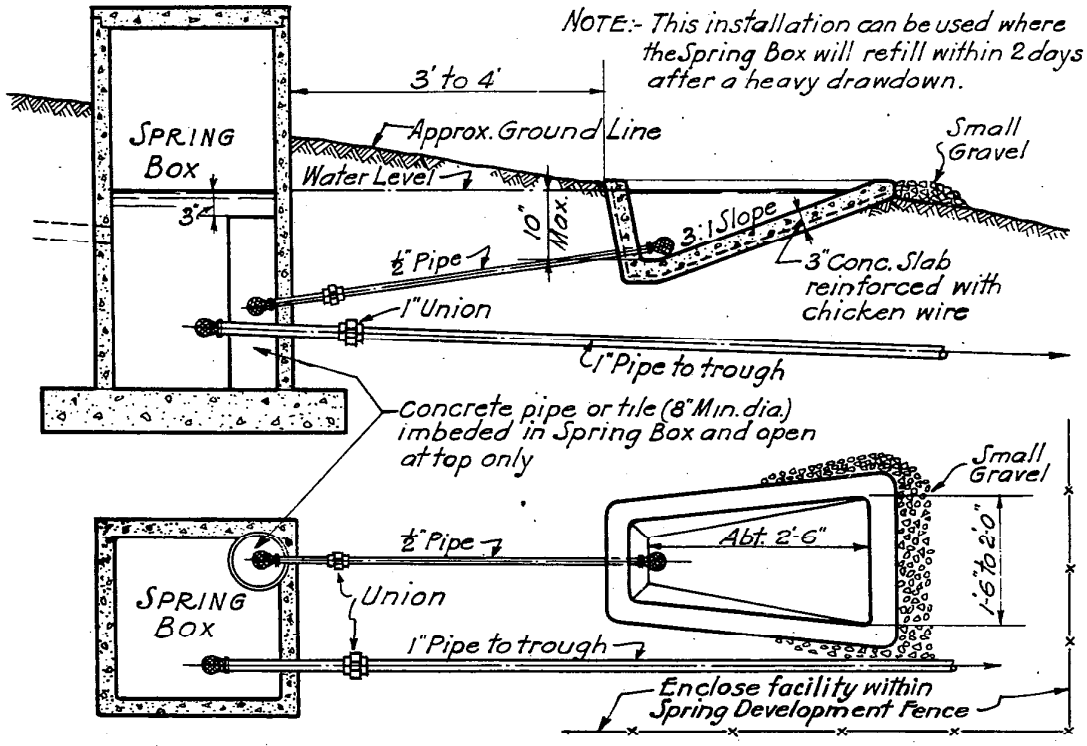

WILDLIFE WATERING FACILITY NEAR SPRING BOX -- No. 2

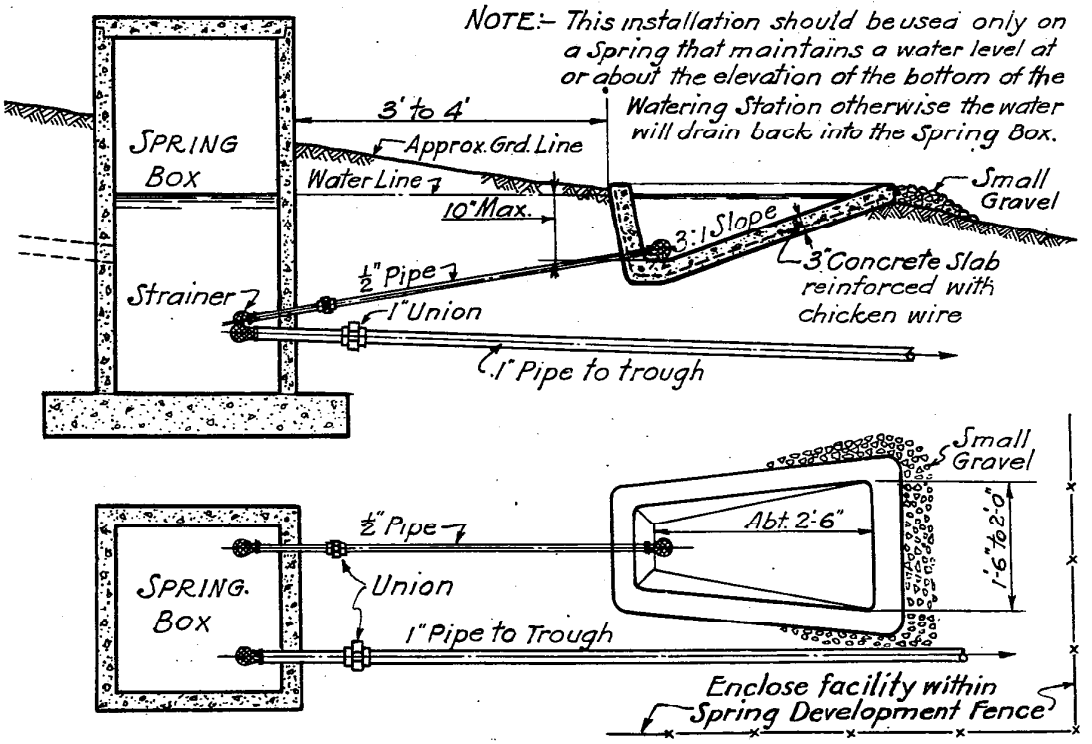

WATER DEVELOPMENT for WILDLIFE

ALL PROGRAMS AND SERVICES OF THE SOIL CONSERVATION SERVICE ARE AVAILABLE TO ANYONE WITHOUT REGARD TO RACE, CREED, COLOR, AGE, SEX OR NATIONAL ORIGIN.

WATER TROUGH ESCAPES

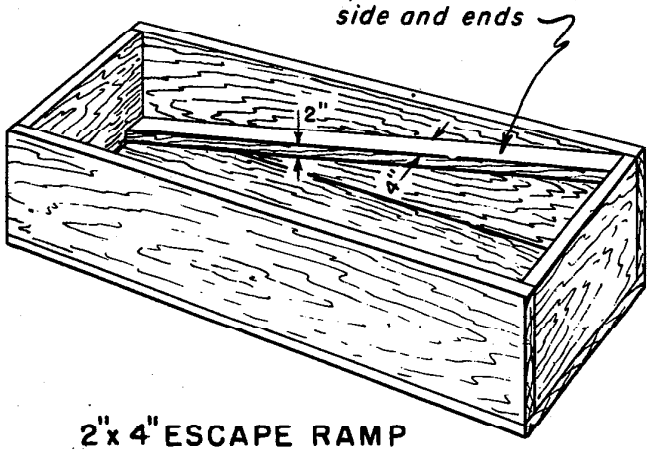

Water trough escapes for wildlife. These help young birds from falling into open tanks or troughs.

2"x 4" ESCAPE RAMP FOR WOODEN TROUGHS

Eastern Washington has land and shelter for wildlife sometimes without adequate water. This is particularly true on wheat farms. The placing of watering facilities will help keep wildlife in many odd areas. Develop some water away from the farmstead if possible. Any landowner desiring a self-filling cistern type water development for game (see photo) should contact the game department.

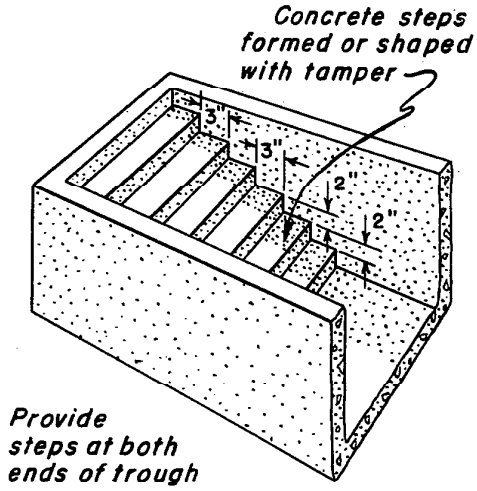

COMBINATION WILDLIFE AND SMALL STOCK ANIMAL ESCAPE STEPS FOR CONCRETE WATER TROUGH

ALL PROGRAMS AND SERVICES OF THE SOIL CONSERVATION SERVICE ARE AVAILABLE TO ANYONE WITHOUT REGARD TO RACE, CREED, COLOR, AGE, SEX OR NATIONAL ORIGIN.
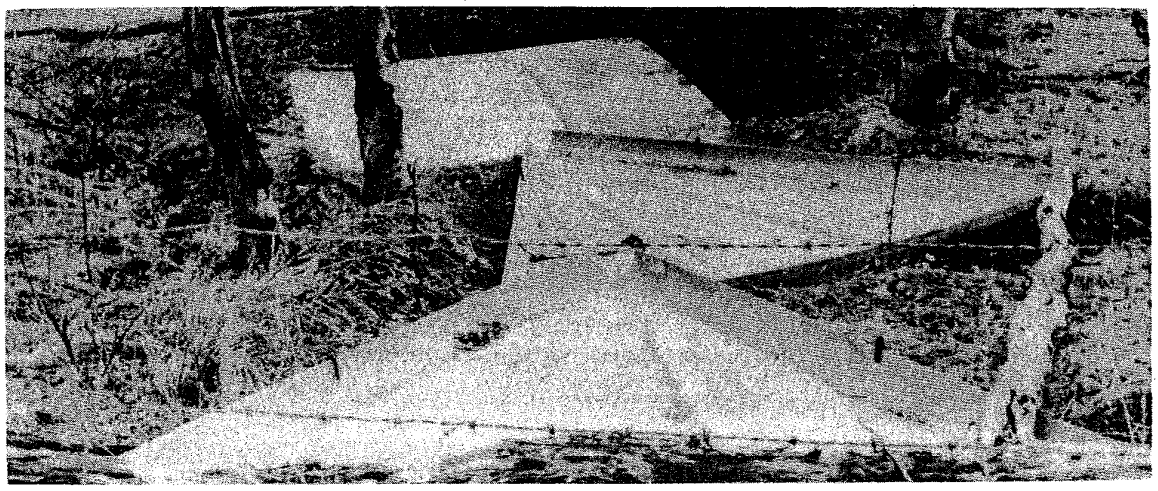
M-2430 USDA-SCS-PORTLAND, OREG. 1959