EXHIBIT 1

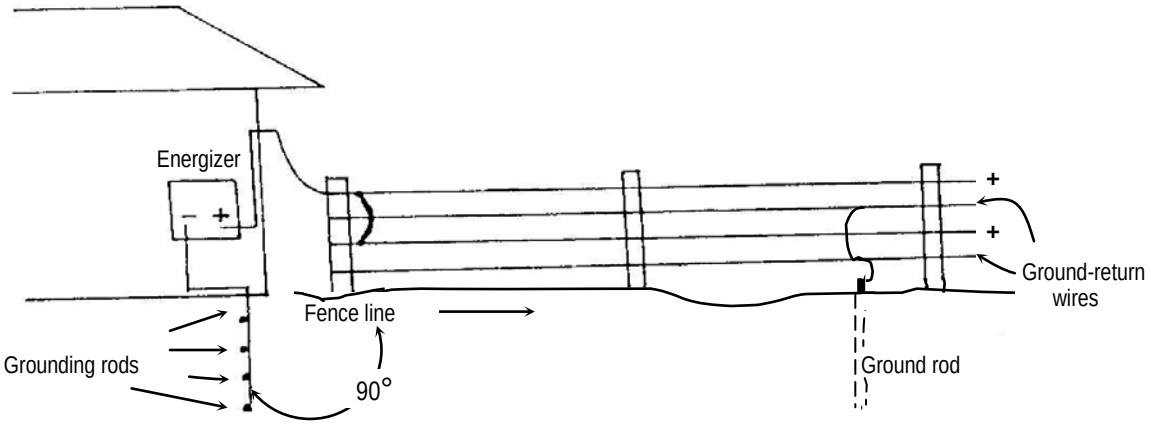

GROUNDING AN ELECTRIC FENCE

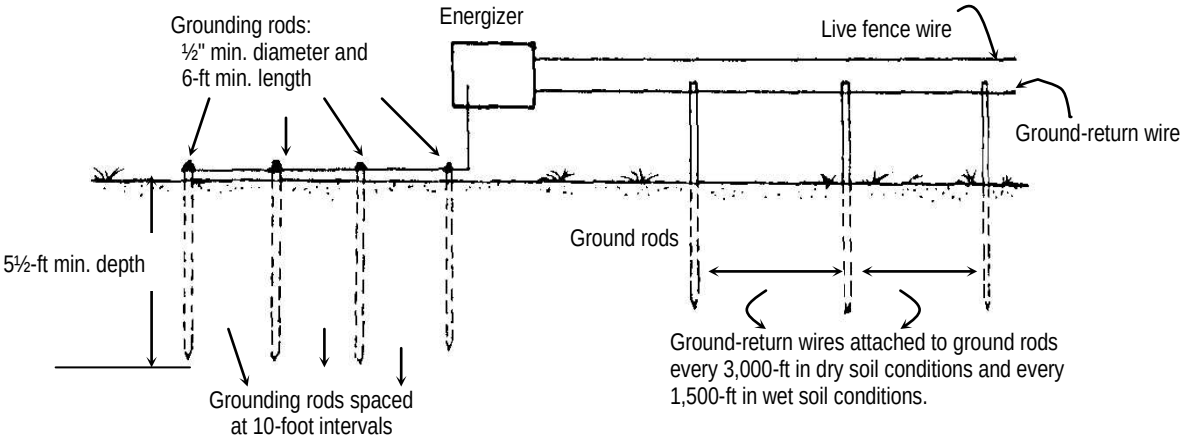

USDI/USFS 2400-Range 8824 2803 (1988)

EXHIBIT 2

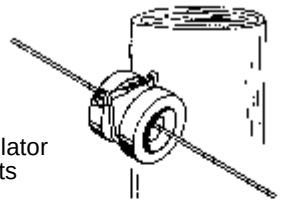

Ceramic insulator for wood posts

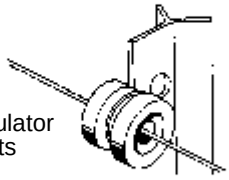

Ceramic insulator for steel posts

Porcelain strain insulator

Porcelain Insulators

INSULATORS

Insulators are constructed of either porcelain or plastic and may be attached to posts by wire clips, nails, staples, or wrap-around tubes. Both porcelain and plastic will deteriorate under extreme climatic conditions.

Insulators should be designed to withstand ultraviolet light and support up to 2,200-pounds of strain.

Porcelain insulators are strong, durable, and resist damage by fire. Porcelain insulators are also very reliable in high strain positions at wire ends and corners. Porcelain insulators are susceptible to frost damage and may develop fine cracks in the glaze.

Black plastic insulators resist breakdown under ultraviolet light but are less efficient insulators than porcelain when dirty.

Plastic Insulators

Nail insulator

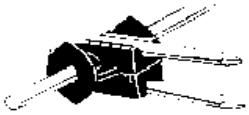

Staple insulator

Wire release insulator

Tube insulator

Tube insulators with metal inserts are durable although subject to the collection of dirt and nesting insects which can reduce effectiveness of insulation.

Double "U" insulator

Wrap-around tube insulator with metal insert

ELECTRIC FENCE INSULATORS

USDI/USFS 2400-Range 8824 2803 (1988)

EXHIBIT 3

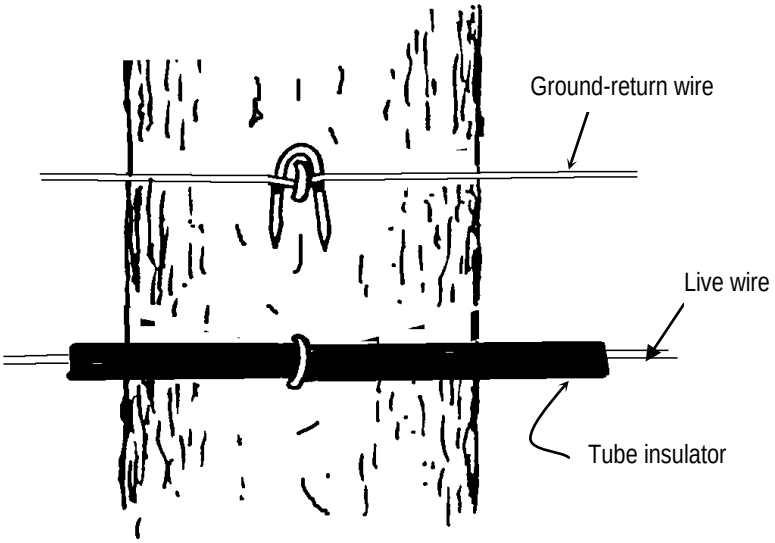

INSULTUBE WIRE INSULATION

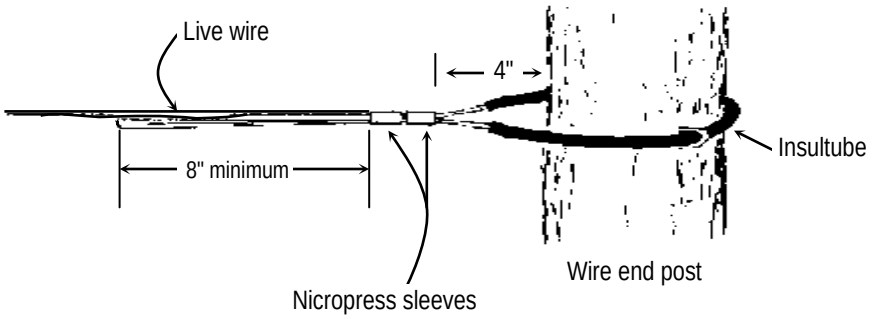

WIRE END TIE-OFF

USDI/USFS 2400-Range 8824 2803 (1988)

ELECTRIC FENCE INSULATORS

EXHIBIT 4

Typical plastic insulator for wood post

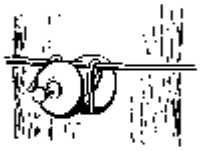

Porcelain insulator on wood line post

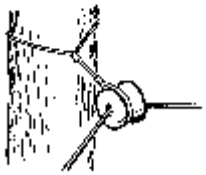

Porcelain insulator installed on wood corner post

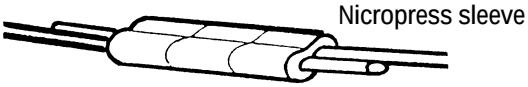

Reliable Wirelink

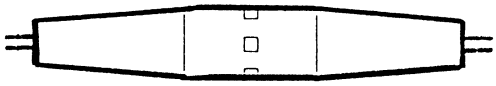

LINE WIRE SPLICING

High-tensile wires on electric fence can be spliced as shown above. Knots give only about 75 percent of the wire strength. Once a wire is spiced, it is impossible to slide insulators or sleeves past the splice.

USDI/USFS 2400-Range 8824 2803 (1988)

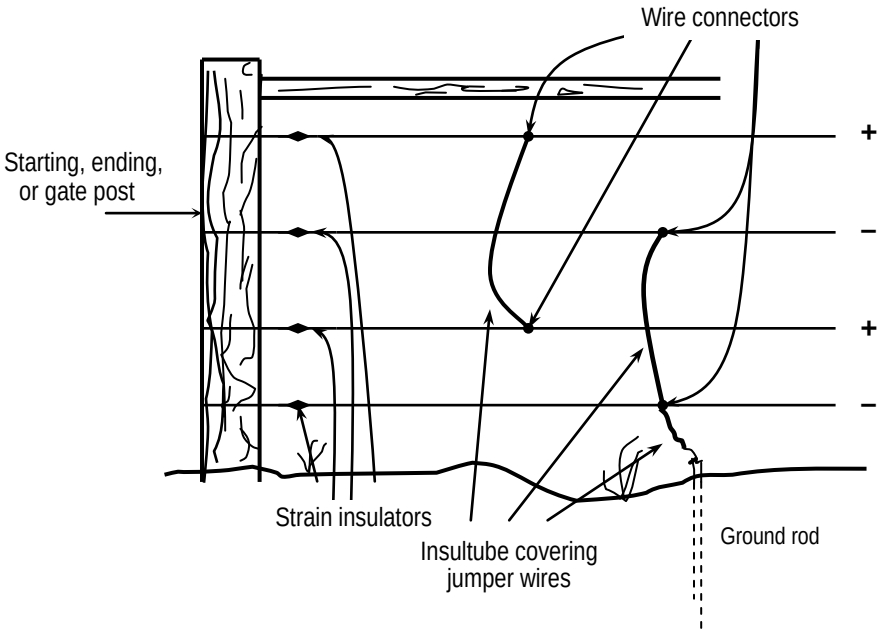

LINE WIRE ELECTRICAL CONNECTIONS

All live wires and ground wires on electric fences are joined to themselves with a continuous jumper wire. These connections are made near each starting, ending, or gate post. Insultube may be used to insulate the wires from each other.

On long fence lines, live and ground-return wires are joined to themselves with insulated jumper wies at intervals not exceeding 1 mile.

If the fence consists of all live wires, one continuous jumper wire is installed at intervals not exceeding one mile.

Jumper wires are connected to the line wires with a nicropress sleeve or other suitable type of wire connector.

ELECTRIC FENCE

EXHIBIT 5

Measuring Wire Tension

Several wire tensioning tools are available, including tension indicator springs that measure wire tension or that allow tensioning line wires to a preset number of pounds.

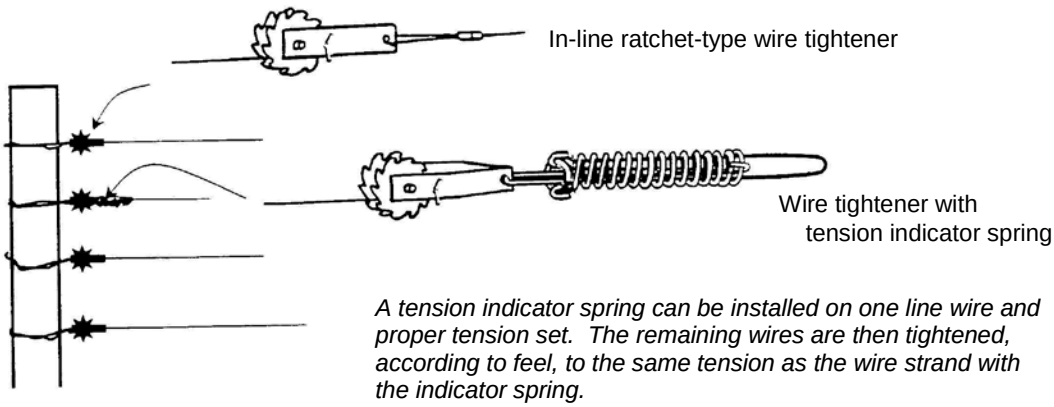

A tension indicator spring can be installed on one line wire and proper tension set. The remaining wires are then tightened, according to feel, to the same tension as the wire strand with the indicator spring.

A simple device can also be fabricated that adequately measures wire tension. On a straight piece of 1-inch x 4-inch board that is 44-inches long, drive two cup hooks (or nails) 40-inches apart and one-inch down from the top of the board (points A and B in the drawing below). Drive a nail ½-inch below the center point of the straight line from point A to B (this is point C in the figure below). Place a fence line wire on the cup hooks (or nails) at points A and B. Attach a spring scale to the center of the line wire and pull the scale until the wire touches the nail at point C. Read the number of pounds needed to pull the wire to point C and multiply by 20 to determine pounds of line tension.

For example, a pull of 12½-pounds times 20 equals a tension of 250 pounds on the line wire.

Construction of this simple tension meter is based on the general formula for static wire tension:

$$\text{Tension (pounds)} = \frac{\text{Length (inches)} \times \text{Balance Scale Reading (pounds)}}{4 \times \text{Vertical Displacement (inches}}$$

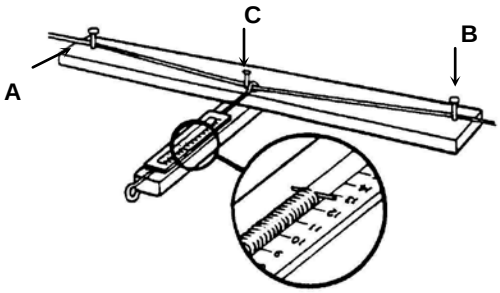

after Sanderson et al (1990) and USDI/USFS 2400-Range 8824 2803 (1988)

EXHIBIT 6

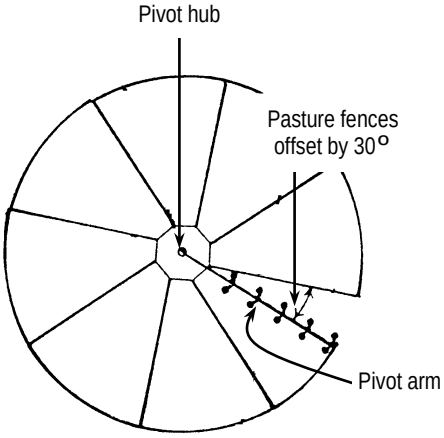

Pasture design for center pivot irrigation system

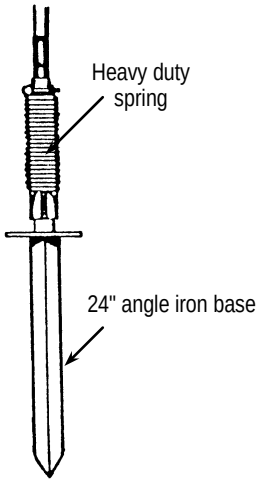

Inset A
Break-over jack

BREAK-OVER FENCE FOR CENTER PIVOT IRRIGATION

The break-over fence allows the pivot arm to drive over pasture fencing rather than travel through openings in the fence line. The fence line must be offset 30-degrees (or more) so that no more than two drive units of the pivot arm are on the fence line at one time. Break-over jacks are placed 10 to 20-feet away from cross-over points of the pivot drive units. Pivot towers that are space more than 130-feet apart require a 48-inch fiberglass line post in the middle of the fence span. Tension springs are needed on each line wire to provide the necessary stretch as the fence is forced down by the pivot arm dive units. At each cross-ver point, a short piece of high-tensile wire is needed to connect the wire strands so they do not become separated by wheels driving over them.

PIVOT IRRIGATION BREAK-OVER FENCE

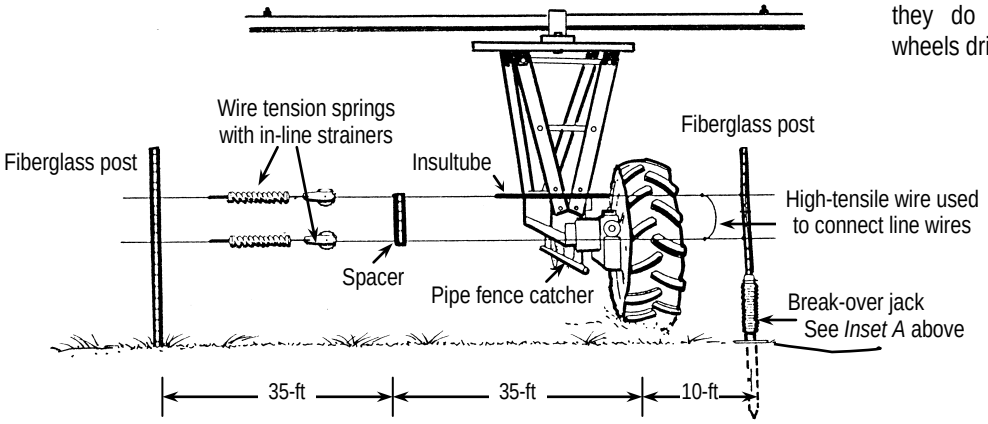

USDI/USFS 2400-Range 8824 2803 (1988)

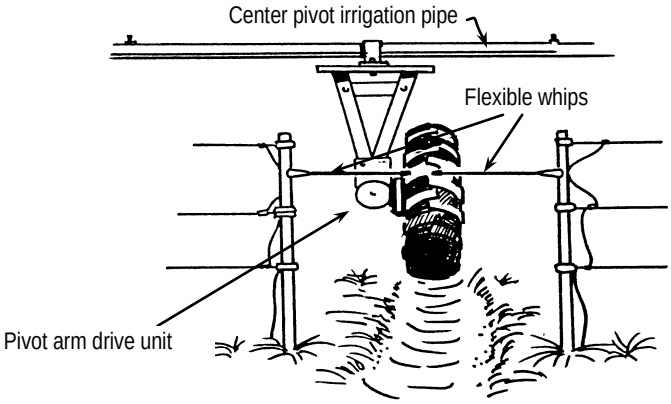

Gate for pivot irrigation system

CENTER PIVOT BREAK-THROUGH GATE

This type of gate provides an opening for the pivot arm drive units to pass through pasture division fences. The break-through gate has flexible whips attached to posts on either side of the gate area that extend into the middle of the gate opening.

ELECTRIC FENCE CROSSINGS FOR CENTER PIVOT IRRIGATION SYSTEMS

EXHIBIT 7

ELECTRIFIED CONVENTIONAL GATE

Nonconductive stays are attached vertically with galvanized U-bolts on the side of gate to receive pressure. High tensile wire is run back and forth between stays from top to bottom and secured with wire stays.

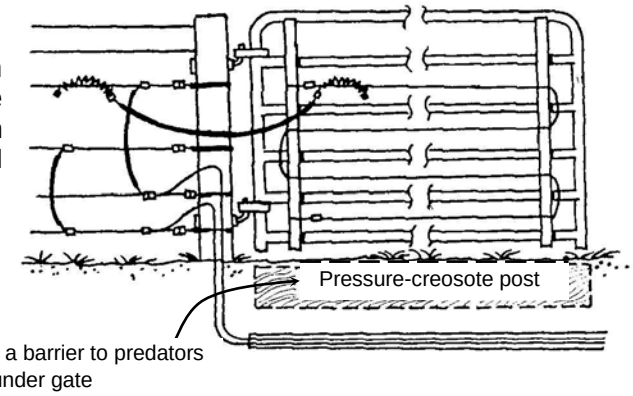

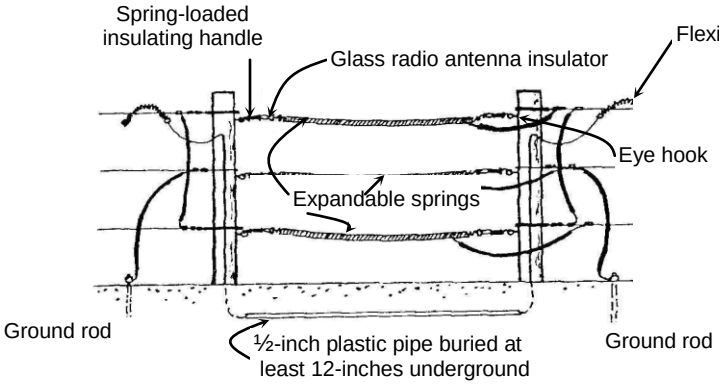

EXPANDABLE SPRING GATE

This is a highly visible electric gate. One or more springs are used, depending on type of livestock being fenced.

ONE WIRE GATE with detachable electrified wire.
Suitable only for irrigated or wet soils.

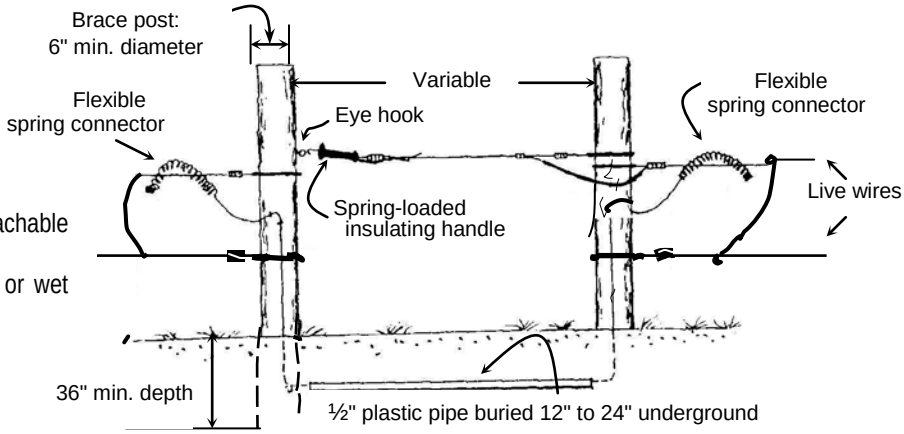

USDI/USFS 2400-Range 8824 2803 (1988)

ELECTRIC FENCING GATES

EXHIBIT 8

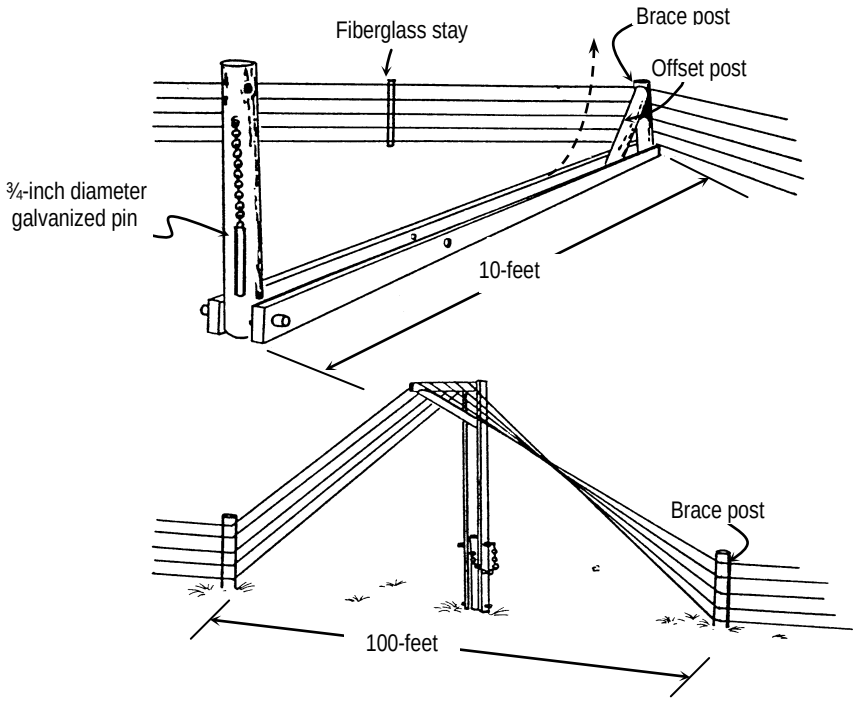

"LIFT" or "AUSTRALIAN" GATE

An offset lift mechanism consisting of: 2-each pressure-creosote planks 10-feet long x 4-inch wide x 1½-inch thick; 1-each 8-foot x 4-inch post set 48-inches in earth; and, 2-each 4-foot x 4-inch posts that comprise the offset post and brace. All gate members are fastened with ¾-inch galvanized bolts and a removable ¾-inch galvanized pin to hold the unit upright.

Gate should be considered practical only for fence with 6 wires or less and with only occasional use when moving from one pasture to an adjacent field.

USDI/USFS 2400-Range 8824 2803 (1988)

ELECTRIC FLOOD GATE

Example of electric high-tensile wi fencing to cross small streams or

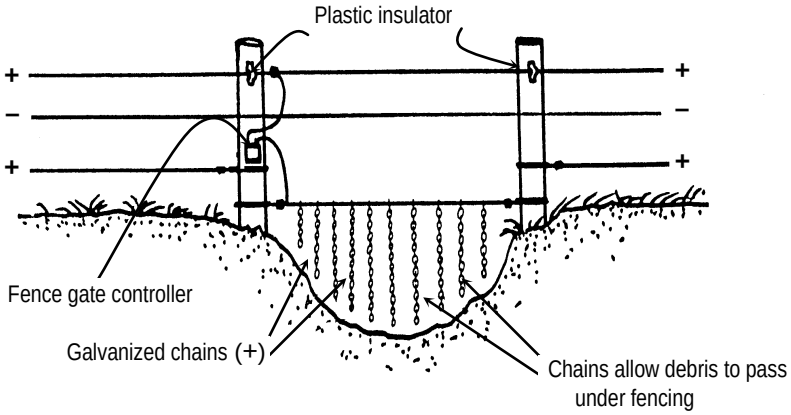

ELECTRIC FENCE SPECIALTY GATES