EXHIBIT 1

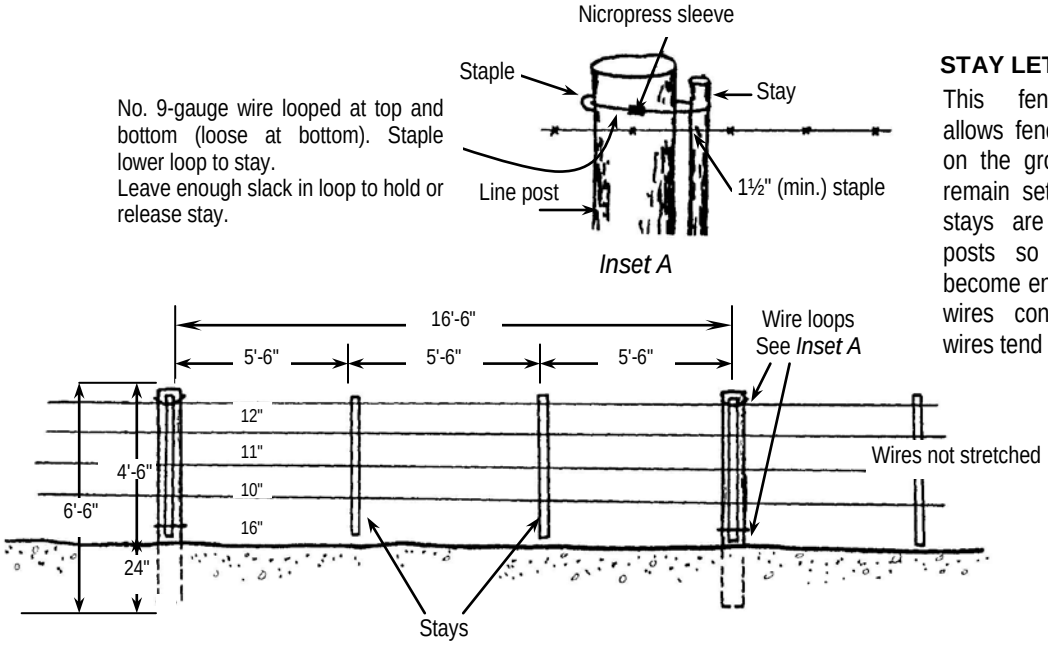

STAY LET-DOWN FENCE

This fence configuration allows fence sections to lay on the ground. Line posts remain set. The bottom of stays are attached to the posts so animals do not become entangled. As fence wires contact the ground, wires tend to corrode quickly.

NOTE: ***Steel posts may also be used***

STAPLE LET-DOWN FENCE

This fence configuration allows all fence line wires to be lowered on the line posts by letting the slack out of each wire temporarily. Wire tension is reapplied to raise fence.

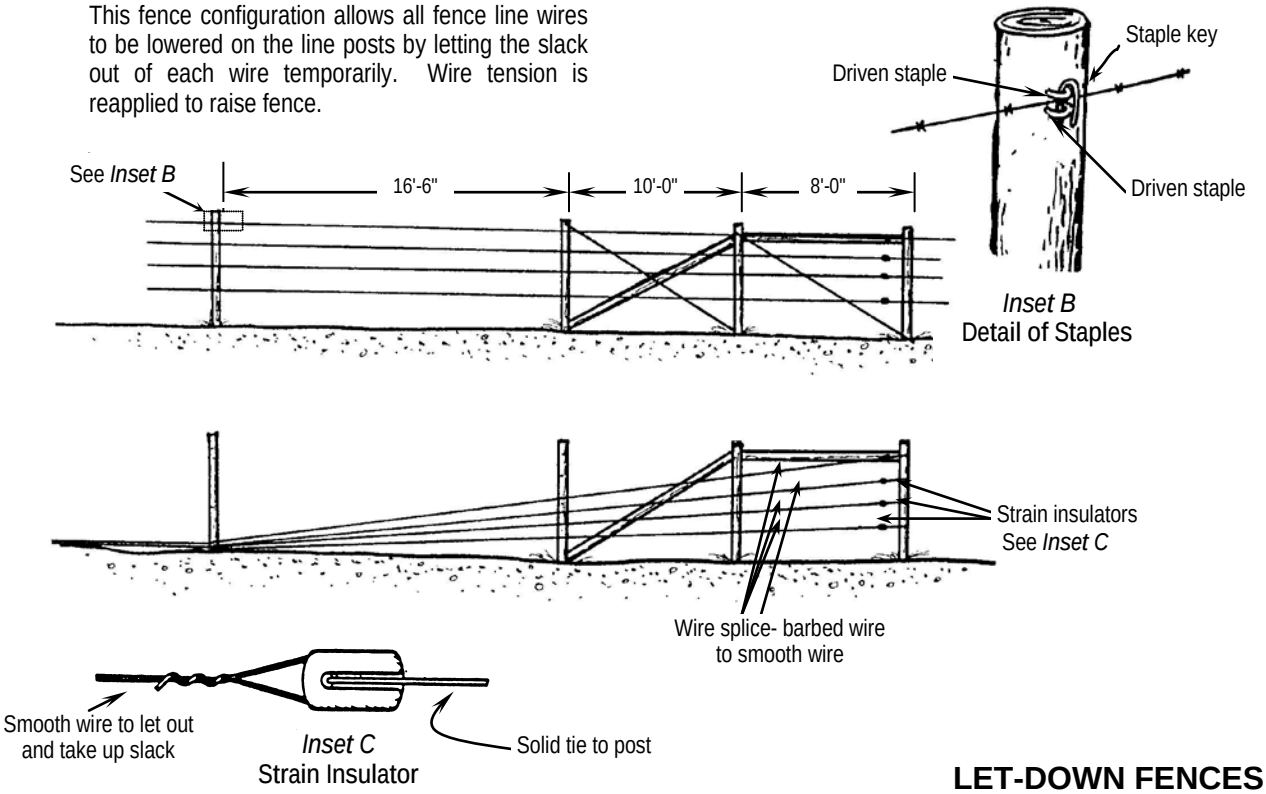

LET-DOWN FENCES

USDI/USFS 2400-Range 8824 2803 (1988)

EXHIBIT 2

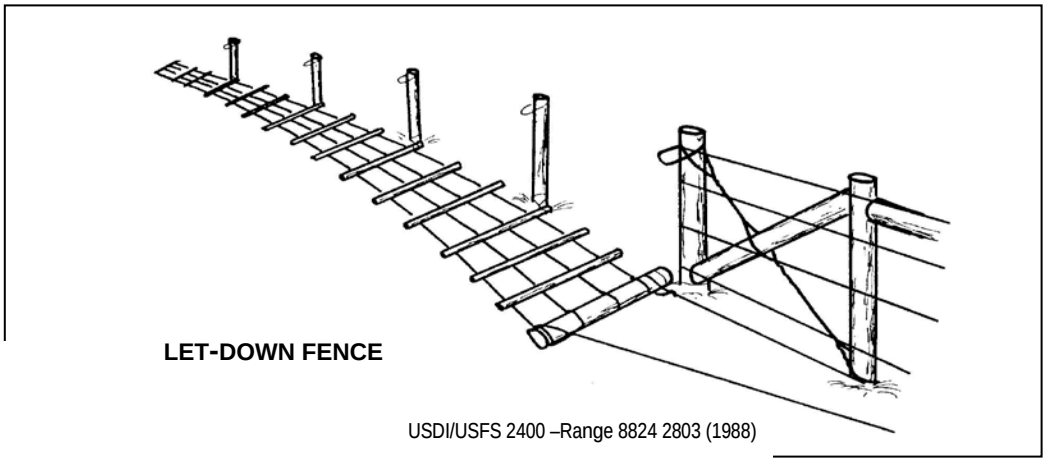

LET-DOWN FENCE

USDI/USFS 2400 –Range 8824 2803 (1988)

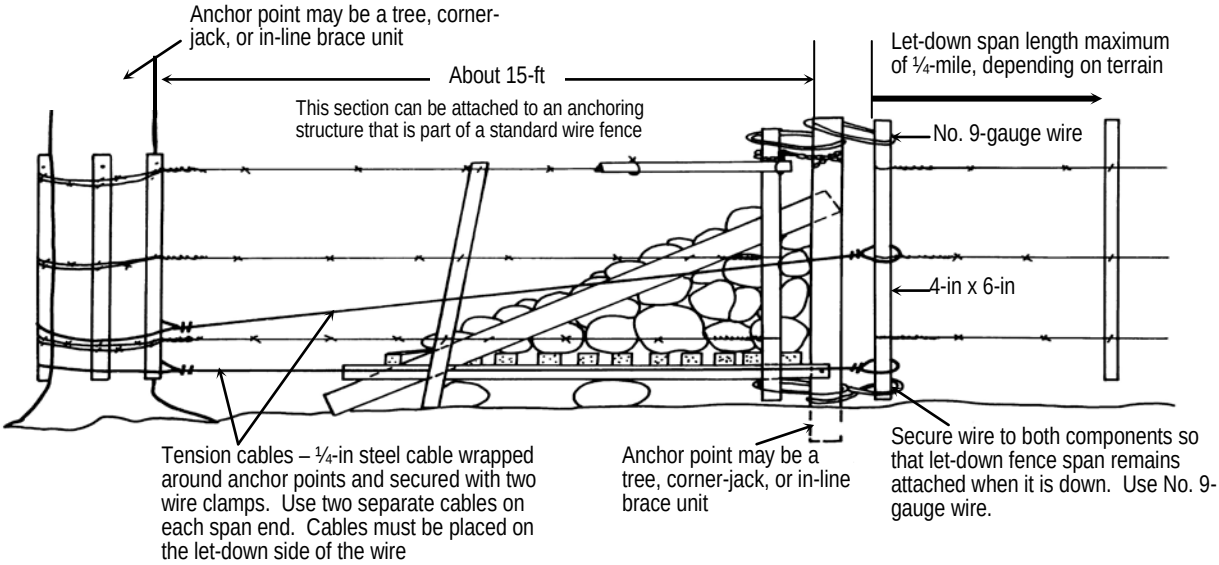

ANCHORING OF LET-DOWN FENCE

Sanderson et al (1990)

LET-DOWN FENCE

EXHIBIT 3

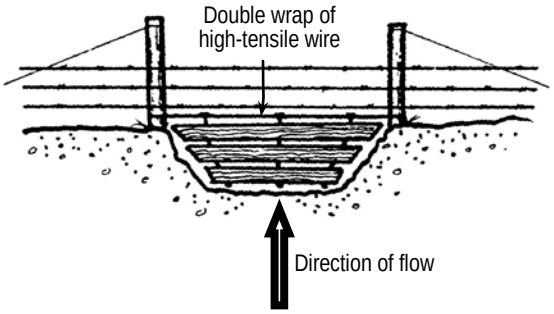

USDI/USFS 2300-Range 8824 2803 (1988)

FLOOD GATES
For fence line crossing of low areas subject to flash floods.

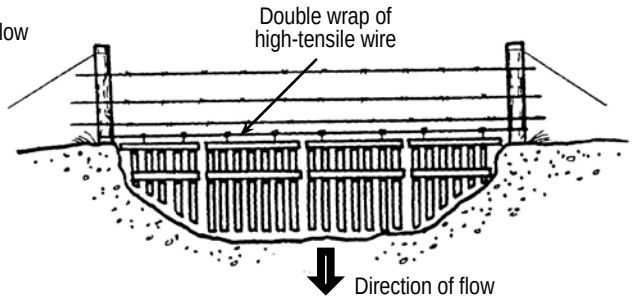

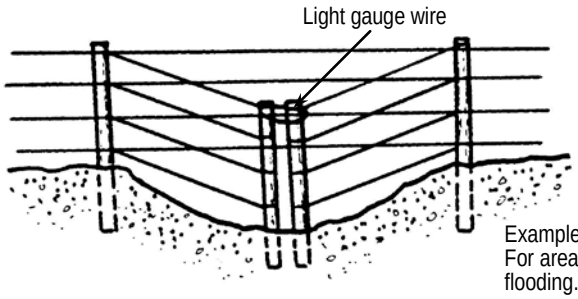

WATER GAPS
For control of livestock where fence lines cross streams or drainageways

Examples of "breakaway" type water gap fencing:
For areas with very little water and only occasional flooding.
Use flood gate type panels in areas with regular flooding.

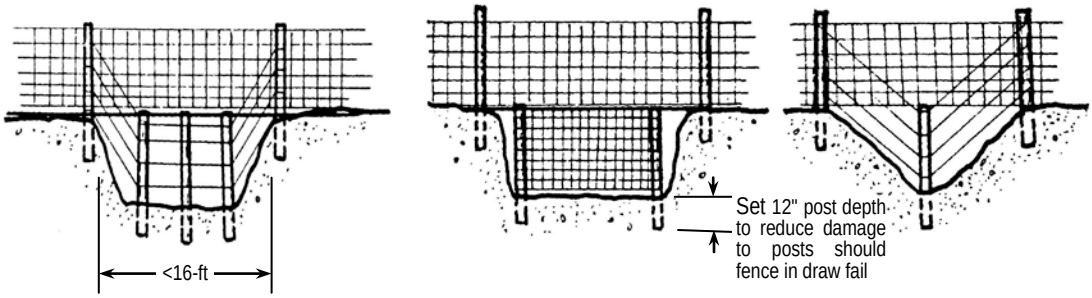

For depressions more than 16-ft wide, brace units need to be installed on either side of drainageway

FLOOD GATES AND WATER GAPS

EXHIBIT 4

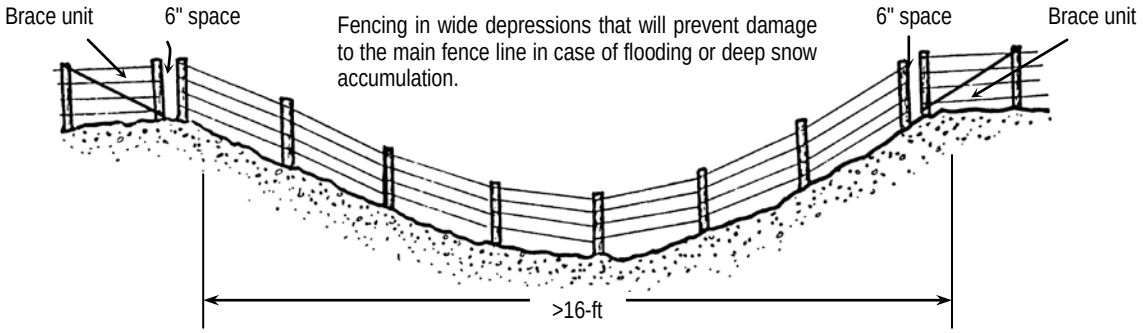

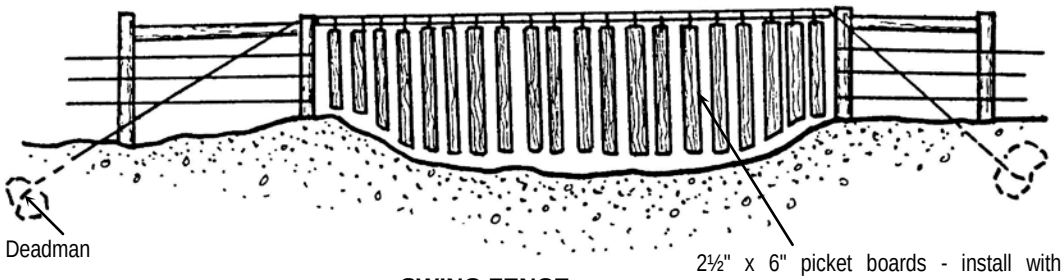

SWING FENCE

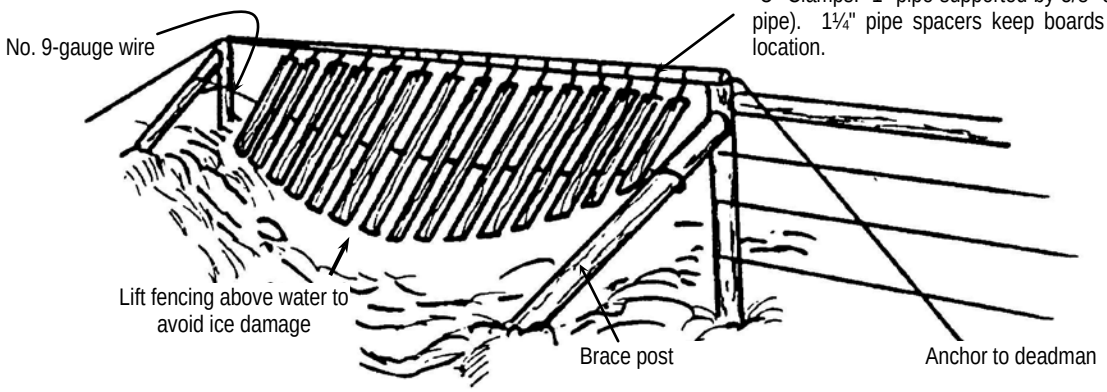

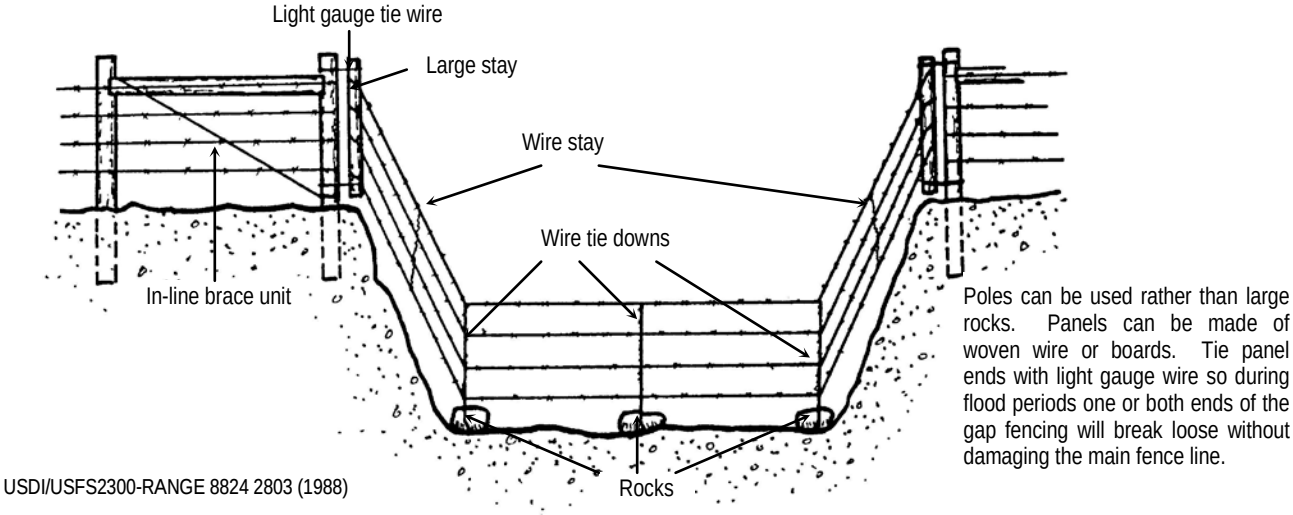

USDI/USFS2300-RANGE 8824 2803 (1988)

WATER GAPS

EXHIBIT 5

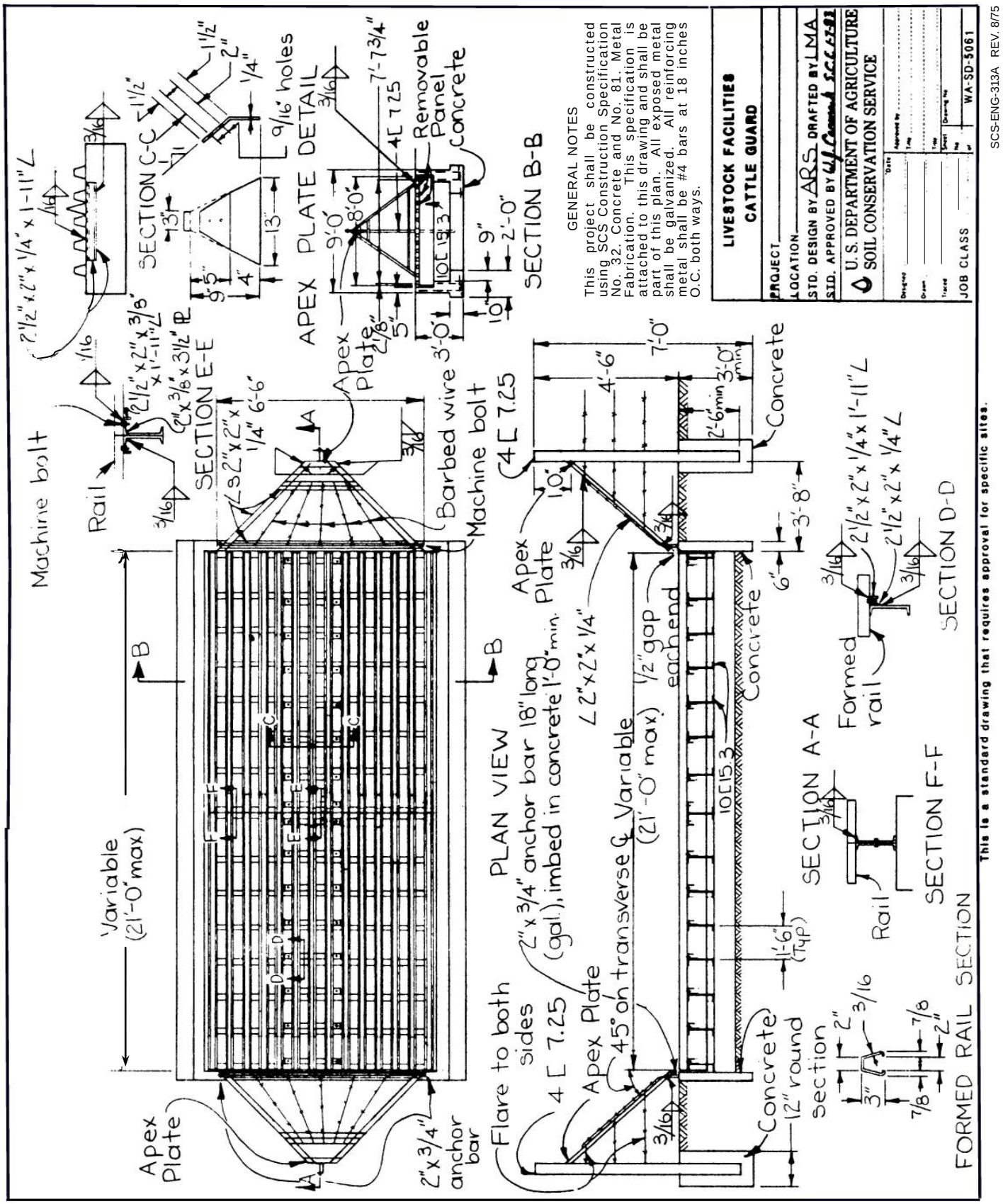
GENERAL NOTES
This project shall be constructed using SCS Construction Specification No. 32, Concrete and No. 81, Metal Fabrication. This specification is attached to this drawing and shall be part of this plan. All exposed metal shall be galvanized. All reinforcing metal shall be #4 bars at 18 inches O.C. both ways.
LIVESTOCK FACILITIES
CATTLE GUARD
PROJECT
LOCATION
STD. DESIGN BY ARS DRAFTED BY LMA
STD. APPROVED BY
U. S. DEPARTMENT OF AGRICULTURE
SOIL CONSERVATION SERVICE
JOB CLASS
WA-SD-5061
SCS-ENG-313A REV. 8/75
This is a standard drawing that requires approval for specific sites.
PLAN VIEW
Variable (21'-0" max)
Apex Plate
2"x3/4" anchor bar
Machine bolt
Rail
Barbed wire
Flare to both sides
4 [7.25
2"x3/4" anchor bar 18" long (gal.), imbed in concrete 1'-0" min.
45° on transverse ℄ Variable (21'-0" max)
1/2" gap each end
Concrete
12" round section
SECTION A-A
SECTION B-B
SECTION C-C
SECTION D-D
SECTION E-E
SECTION F-F
APEX PLATE DETAIL
Removable Panel Concrete
Formed rail
FORMED RAIL SECTION

EXHIBIT 6

CONCRETE FOUNDATION

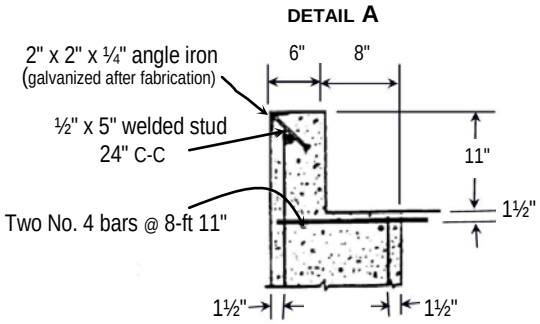

MATERIALS REQUIRED	Cattle Guard Width 14-ft	16-ft	24-ft
Concrete	3.3-yd^3	3.7-yd^3	5.4- yd^3
No. 4 reinforcing steel bars	324-l.f.	355-l.f.	486-l.f.
2-in x 2-in angle iron	28-l.f.	32-l.f.	48-l.f.

USDI/USFS 2300-Range 8824 2803 (1988)

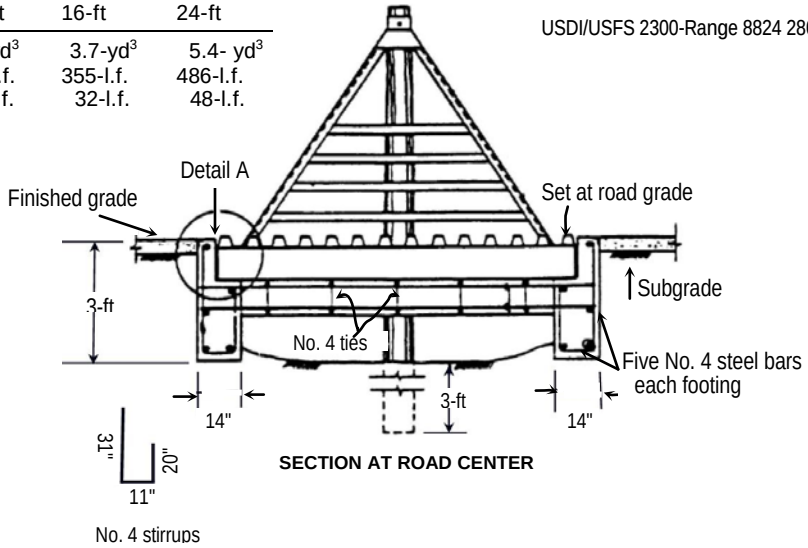

SECTION AT ROAD CENTER

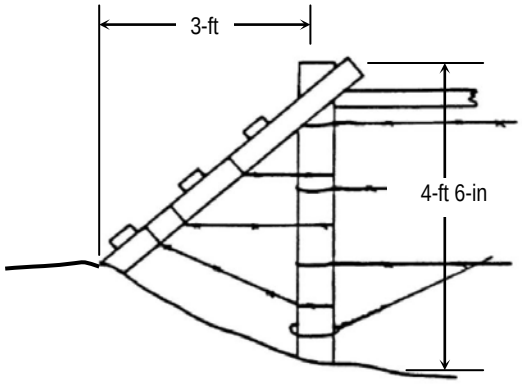

Secure fence to end-barrier as needed to prevent passage of livestock.

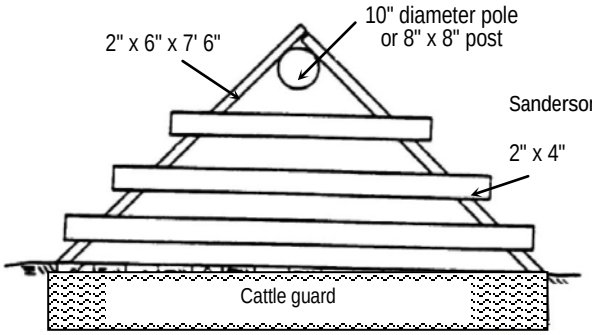

Sanderson et al (1990)

Wooden end-barrier for cattle guard. End-barrier should be painted white with paint that will adhere to treated wood and marked with white reflectors.

END-BARRIER

CATTLE GUARD