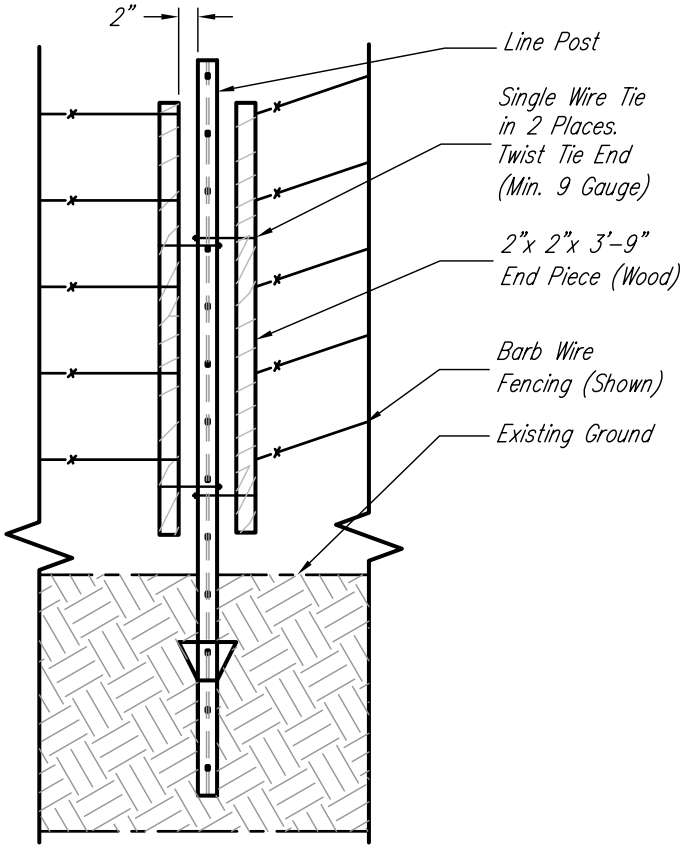

BREAK AWAY END DETAIL

Not to Scale

Sheet 1 of 1	Drawing No.	File No.	NRCS Natural Resources Conservation Service United States Department of Agriculture	BARB WIRE BREAK AWAY DETAIL *Exhibit OH-382-4* *Ohio*	Designed *K. Rowe* — Date *12-05* Drawn *C. Copley* — *12-05* Checked Approved