A good escape ramp for a rectangular trough is simply an appropriately sized panel of expanded-metal grating that spans the width of the trough at one end and slants from the top of the rim to the bottom.

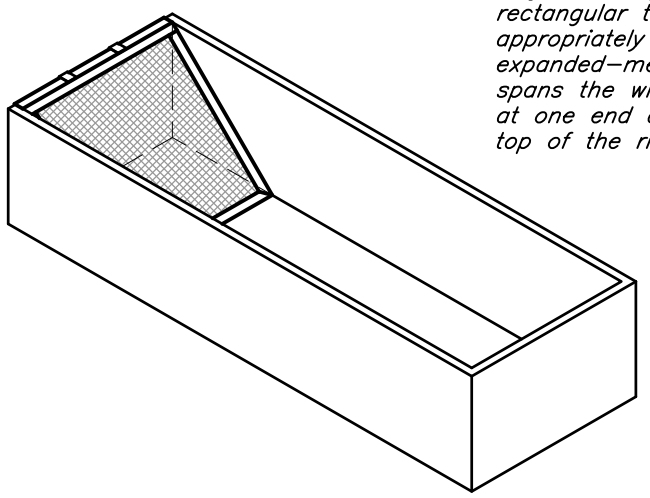

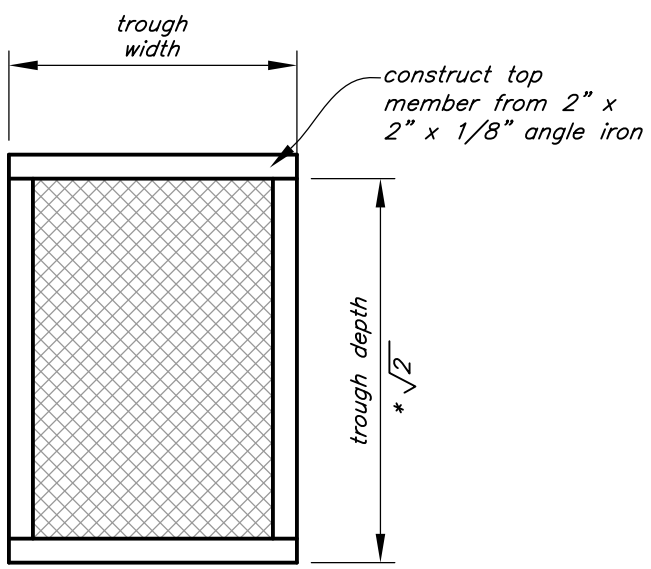

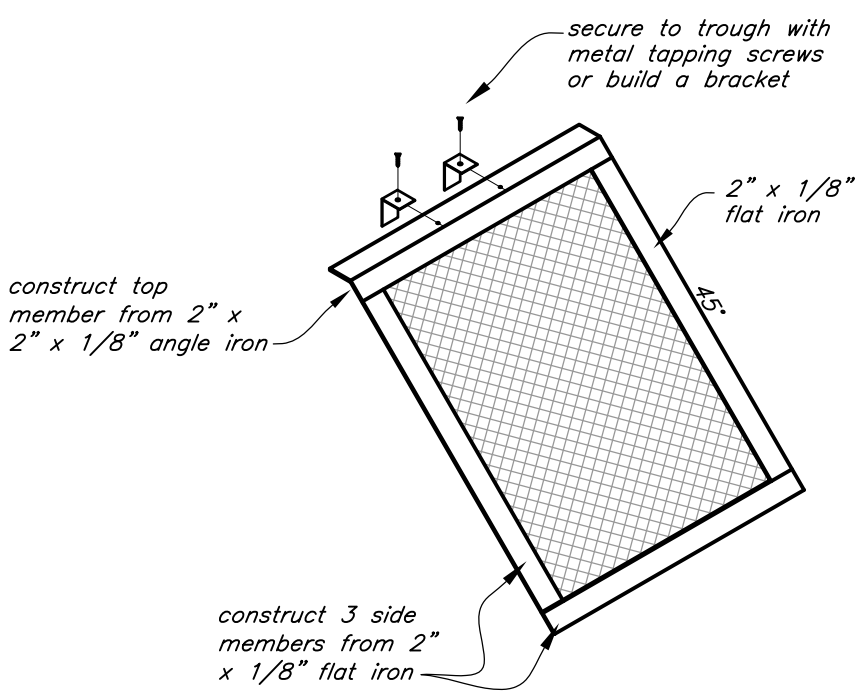

TYPE A

It can be reinforced with steel bars along the edges. By using a larger piece of grating and bending it to provide a flat "cover" at the top, it can be used to protect a float valve or other plumbing.

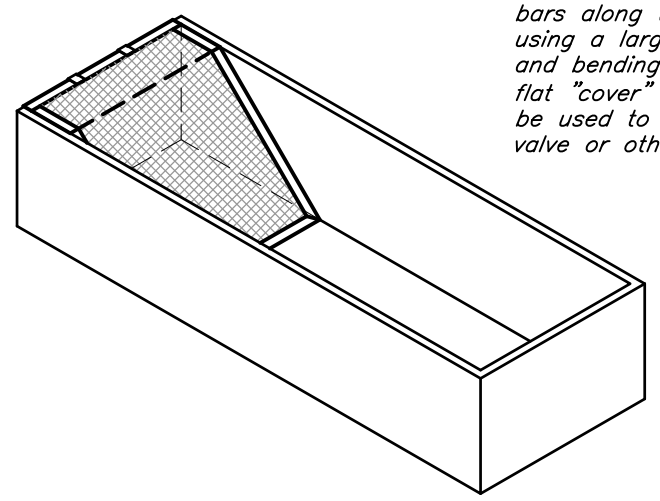

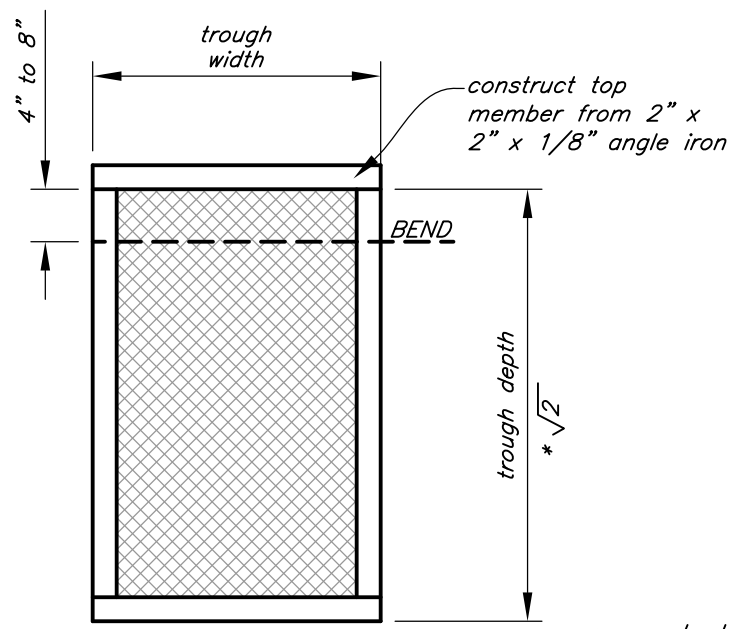

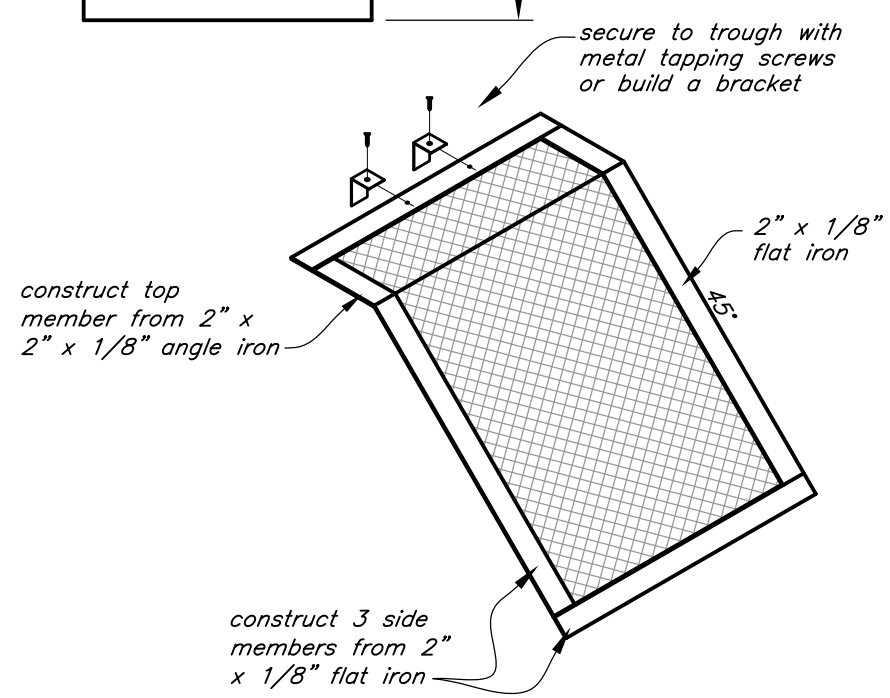

TYPE B

REQUIREMENTS

1. Escape ramps shall extend to bottom of trough and be flush with inside wall of the trough to provide safe and easy egress at low water levels.
2. Escape ramps shall be sloped no steeper than 45 degrees, to allow animals to climb out without slipping back into the water.
3. Escape ramps shall be built of tractive, long lasting materials, such as painted or coated metal grating, or high-strength plastic composites (e.g., Rainmaker Products polyethylene ramps or approved equal). Expanded metal escape ramps shall be 11 or 13 gauge with 1/2 inch mesh and shall be finished with a rust-inhibiting paint or coating. Refer to Expanded Metal Escape Ramp Fabrication drawing for construction details of expanded metal escape ramps.
4. Escape ramps shall be securely attached to the trough rim. Recommend attaching ramp with metal-tapping screw and washer, or a bracket with a bolt and wing nut for easy removal during trough maintenance. Secured attachment shall keep ramp from being moved loose by livestock, animals or freezing water.

REFERENCE:

"Water for Wildlife: a Handbook for Ranchers and Range Managers," Bat Conservation International, 2007

"Wildlife Watering and Escape Ramps on Livestock Water Developments: Suggestions and Recommendations," Idaho BLM Technical Bulletin 89-4, May 1989

Drawing not to scale.

Designed TDM 12/2011
Drawn KLY 12/2011
Checked JM 12/2011
Approved [signature] 12/2011
Title State Conservation Engineer

RECTANGULAR TROUGH
ESCAPE RAMPS

NRCS
Natural Resources Conservation Service
United States Department of Agriculture

File Name
wildlife_escape_ramps.dwg
Drawing No.
Sheet 1 of 3

1/3/2012 9:15:00 AM, wildlife_escape_ramps.dwg

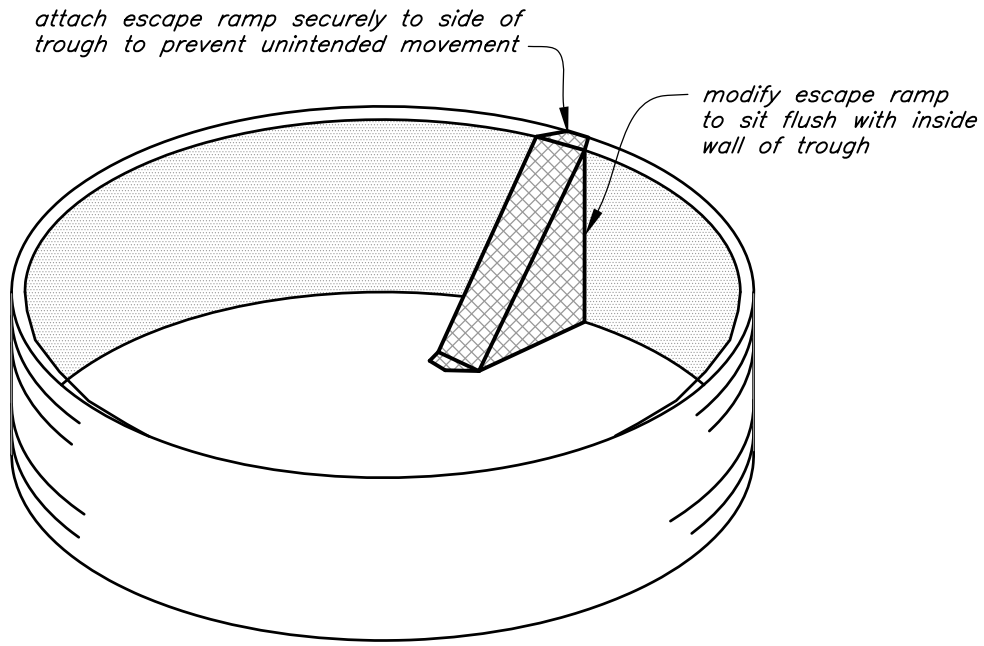

TYPICAL METAL CIRCULAR TROUGH

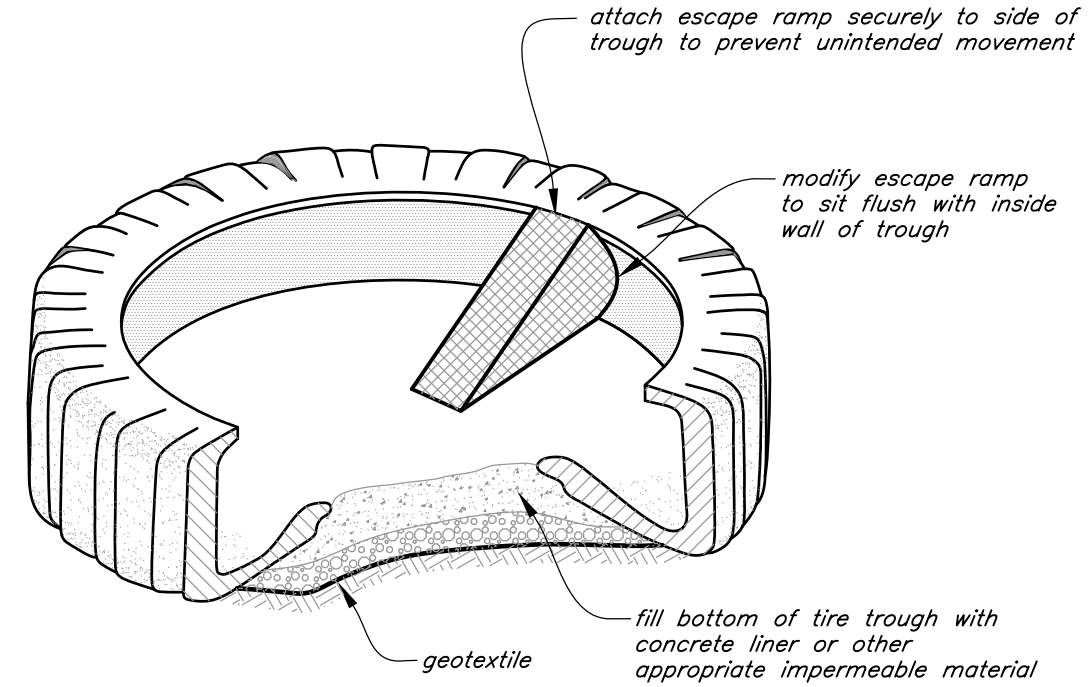

TYPICAL TIRE TROUGH

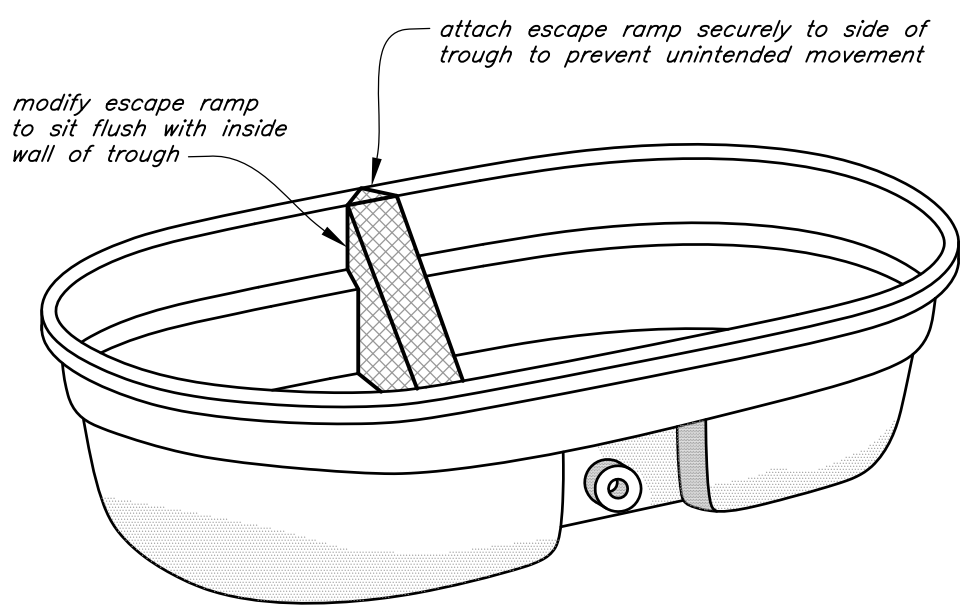

TYPICAL POLYETHYLENE/FLEXIBLE RUBBER TROUGH

REQUIREMENTS

1. Escape ramps shall extend to bottom of trough and be flush with inside wall of the trough to provide safe and easy egress at low water levels.

2. Escape ramps shall be sloped no steeper than 45 degrees, to allow animals to climb out without slipping back into the water.

3. Escape ramps shall be built of tractive, long lasting materials, such as painted or coated metal grating, or high–strength plastic composites (e.g., Rainmaker Products polyethylene ramps or approved equal). Expanded metal escape ramps shall be 11 or 13 gauge with 1/2 inch mesh and shall be finished with a rust–inhibiting paint or coating. Refer to Expanded Metal Escape Ramp Fabrication drawing for construction details of expanded metal escape ramps.

4. Escape ramps shall be securely attached to the trough rim. Recommend attaching ramp with metal–tapping screw and washer, or a bracket with a bolt and wing nut for easy removal during trough maintenance. Secured attachment shall keep ramp from being moved loose by livestock, animals or freezing water.

REFERENCE:

"Water for Wildlife: a Handbook for Ranchers and Range Managers," Bat Conservation International, 2007

"Wildlife Watering and Escape Ramps on Livestock Water Developments: Suggestions and Recommendations," Idaho BLM Technical Bulletin 89–4, May 1989

Drawing not to scale.

		Date
Designed	TDM	12/2011
Drawn	KLY	12/2011
Checked	JM	12/2011
Approved		
Title		

CIRCULAR TROUGHS
ESCAPE RAMPS

NRCS
Natural Resources Conservation Service
United States Department of Agriculture

File Name
wildlife_escape_ramps.dwg

Drawing No.

1/3/2012 9:15:16 AM, wildlife_escape_ramps.dwg

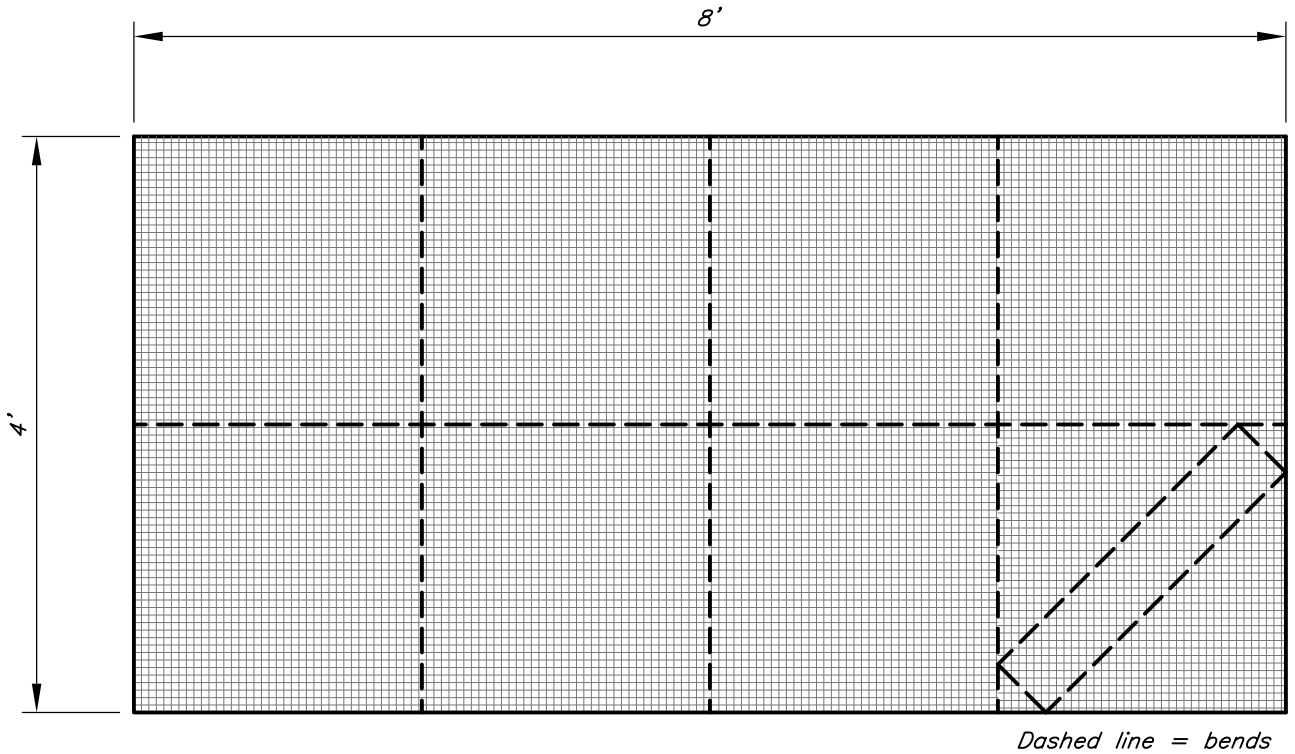

An 8' x 4' sheet of expanded metal can be cut into (8) 2' x 2' squares and bent along dashed lines as indicated in lower right square to form ramp for a trough 20" deep.

CUTTING EXAMPLE DIAGRAM

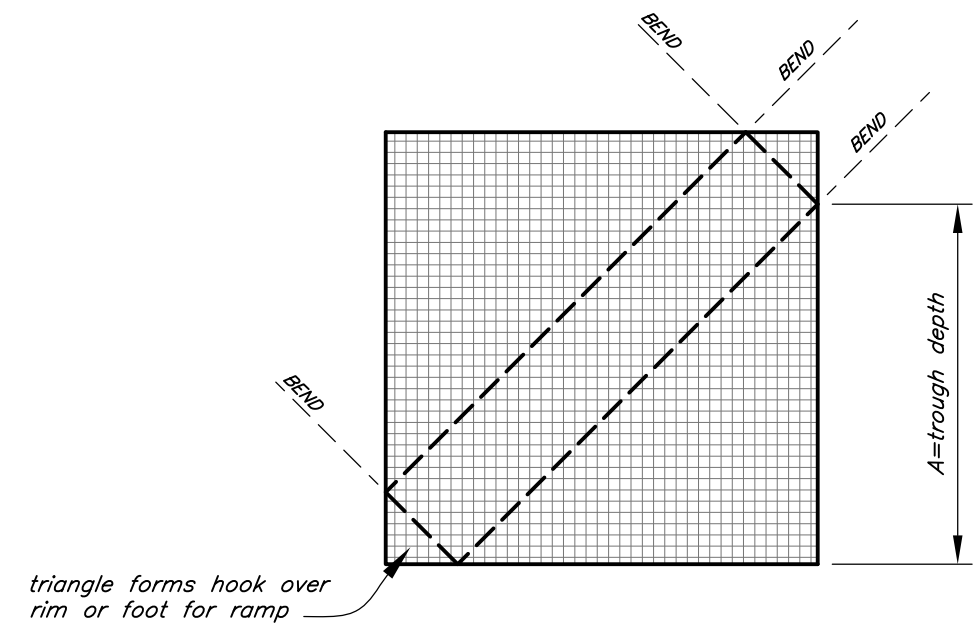

CUTTING AND BENDING DIAGRAM

EXPANDED METAL RAMP REQUIREMENTS

1. Expanded metal ramps shall be fabricated of 11 or 13 gauge steel with 1/2 inch grating. Use cutting diagram, as shown on this sheet, with the length (A) matching the depth of the trough.
2. Ramp to be modified as needed to set flush with edge of trough, as shown below.
3. Once all cutting, bending and modifications on ramp are complete, finish ramp with a rust-inhibiting paint or coating.
4. Bend the top corner of the ramp over the rim of the trough and attach with screws or bolts.

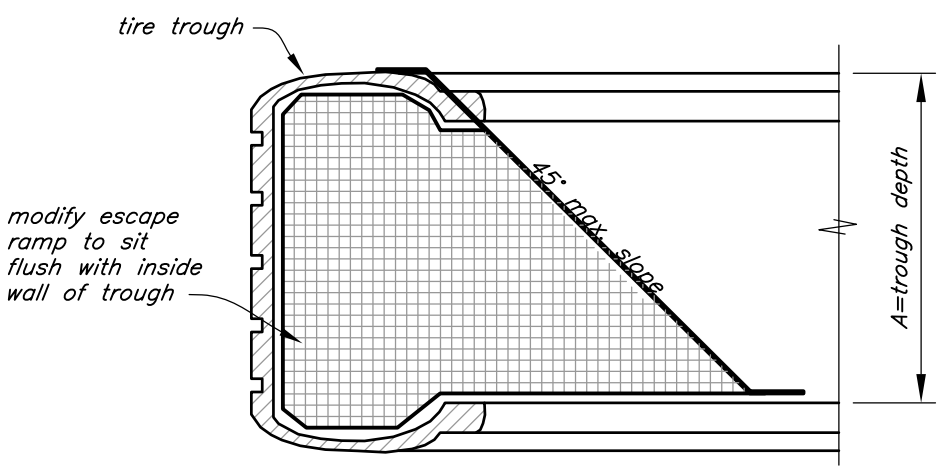

SECTION VIEW OF TYPICAL TIRE TROUGH

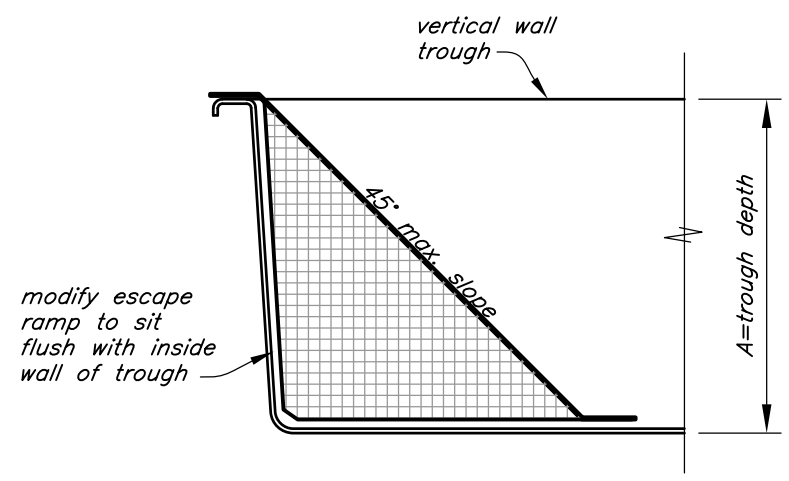

SECTION VIEW OF VERTICAL TROUGH WALL

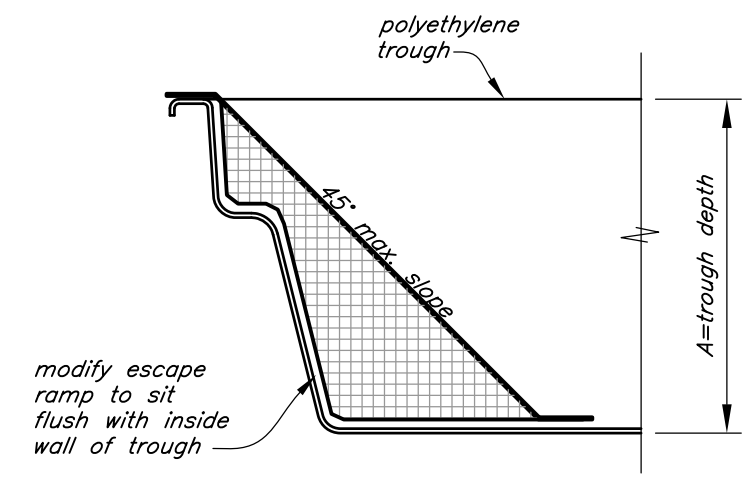

SECTION VIEW OF IRREGULAR SHAPED TROUGH WALL

Drawing not to scale.

		Date
Designed	TDM	12/2011
Drawn	KLY	12/2011
Checked	JM	12/2011
Approved		
Title		

EXPANDED METAL ESCAPE RAMP FABRICATION

ESCAPE RAMPS

NRCS
Natural Resources Conservation Service
United States Department of Agriculture

File Name
wildlife_escape_ramps.dwg

Drawing No.

Sheet 3 of 3

1/3/2012 9:15:43 AM, wildlife_escape_ramps.dwg