Artificial Nesting Structures

July 2008 *Fish and Wildlife Habitat Management Leaflet* *Number 20*

Introduction

Artificial nesting structures can be used to increase wildlife reproductive success in areas where natural nest sites are unavailable or unsuitable. Although artificial nesting structures cannot replace natural nesting habitats, they can increase the number of nesting sites available in an area.

Many types of wildlife, including songbirds, woodpeckers, waterfowl, raptors, squirrels, and bats, use artificial nesting structures. While structures are generally designed to meet the nesting requirements of certain species, they may also be used by nontarget animals and provide roosting and winter cover for a variety of birds and mammals. Nest boxes, bat houses, nesting platforms or shelves, nesting baskets, culverts, and cylinders are some of the common types of artificial nesting structures.

The most effective artificial nesting structures are those installed in close proximity to brood-rearing habitat, adequate escape/concealment cover, a reliable source of food and water, and other elements of the habitat of target species. Predators, competitors, and territory sizes for individual species also influence the usefulness of nesting structures. Nest monitoring and maintenance actions can be taken to limit competing or undesirable species, assess reproductive success, and provide an opportunity for landowners and managers to observe wildlife.

This leaflet is designed as an introduction to the use of artificial nesting structures to enhance wildlife habitats. When incorporated into comprehensive habitat management plans, artificial nesting structures can increase wildlife use in many areas. The success of any management strategy depends on targeting the habitat needs of the desired wildlife species, and assessing managed areas to ensure that the required habitat elements are present. Landowners and managers should be familiar with federally and State-listed rare, threatened, or endangered plant and animal species to ensure their protection. Involvement of wildlife professionals in the identification of habitat management objectives and actions is encouraged.

USFWS

Tree swallows using natural cavities and artificial nest boxes.

Cavity-nesting wildlife

Birds and mammals that nest in tree cavities are likely to use nest boxes. Primary cavity-nesting species, such as members of the woodpecker family, excavate nesting cavities in live or standing dead trees (snags). Secondary cavity nesters (some passerine or perching birds, owls, waterfowl, and mammals) use cavities abandoned by primary excavators and those formed by fungus, knots, and trees subject to decay. The presence of snags in forested areas is directly related to the quality and quantity of nesting habitat for many cavity-nesting species. Fifty-five species of cavity-nesting birds in North America use snags, and invertebrates inhabiting the dead wood provide a rich food source. Optimal nesting opportunities for cavity-nesting wildlife are typically found on forested tracts that contain 10 to 12 small (<12-inch diameter at breast height (dbh)) and 2 to 5 large (>12-inch dbh) standing dead trees per acre. Sloughing bark on snags is also used by roosting bats. Table 1 provides a list of North American cavity-nesting birds. Table 2 provides a list of North American cavity-nesting mammals.

Table 1 North American cavity-nesting birds

Primary (excavator)	Secondary (nonexcavator)	Secondary (nonexcavator)
Northern flicker *	Black-bellied whistling duck *	Violet-green swallow *
Pileated woodpecker *	Wood duck *	Tree swallow *
Red-bellied woodpecker	Common goldeneye *	Purple martin *
Gila woodpecker	Barrow's goldeneye *	Black-capped chickadee *
Red-headed woodpecker	Bufflehead *	Carolina chickadee *
Acorn woodpecker	Hooded merganser *	Boreal chickadee *
Lewis' woodpecker	Common merganser *	Chestnut-backed chickadee *
Yellow-bellied sapsucker	American kestrel *	Mountain chickadee *
Williamson's sapsucker	Barn owl *	Tufted titmouse *
Hairy woodpecker *	Eastern screech owl *	Plain titmouse *
Downy woodpecker	Western screech owl *	Bridled titmouse *
Red-cockaded woodpecker	Whiskered screech owl	White-breasted nuthatch *
Ladder-backed woodpecker	Northern hawk owl	Red-breasted nuthatch *
Nuttall's woodpecker	Barred owl *	Brown-headed nuthatch *
Strickland's woodpecker	Boreal owl *	Pygmy nuthatch
White-headed woodpecker	Northern saw-whet owl *	Brown creeper
Black-backed woodpecker	Spotted owl *	House wren *
Three-toed woodpecker	Flammulated owl *	Winter wren
Golden-fronted woodpecker *	Elf owl	Carolina wren *
Black-capped chickadee *	Ferruginous pygmy owl	Bewick's wren *
	Northern pygmy owl	Eastern bluebird *
	Brown-crested flycatcher *	Western bluebird *
	Great-crested flycatcher *	Mountain bluebird *
	Ash-throated flycatcher *	Prothonotary warbler *

* Species known to use nest boxes.

Table 2 Some cavity-nesting mammals in North America

Yellow-pine chipmunk	Deer mouse
Northern flying squirrel	Common red-backed vole
Gray squirrel	Yellow-necked field mouse
Fox squirrel	Ermine
Red squirrel	Bats
Bushy-tailed wood rat	Raccoon

USFS, Alan Dyck

Pileated woodpecker feeding on standing dead tree (snag). Woodpeckers excavate nest cavities in live trees or snags.

John English, Big Country Audubon Society

Natural cavities provide nesting sites for many species of birds and mammals.

Cavity-nesting waterfowl and other birds exhibit site fidelity, where nesting females return to the general area in which they were raised. When nest sites are destroyed by timber harvest, land development, and natural disturbances, returning females are forced to find other nesting cavities. Landowners and managers can supply artificial nesting structures to replace lost nest sites and should limit the amount of disturbance during the nesting season.

Nesting structure basics

Besides overall habitat conditions, several factors influence the success of artificial nesting structures. These factors include construction materials used, structure design and placement, installation methods, use of predator guards, and monitoring and maintenance performed. Wildlife managers must consider all of these factors to maximize the usefulness of nesting structures. For example, the best-designed structures will be of little use if they are placed in the wrong habitat type or they are easily accessed by predators. Likewise, a well-designed structure placed in suitable habitat may not be used if it is not properly attached or is easily detached from its support by wind or storms.

Construction materials

Structures made of wood are relatively inexpensive and easy to build. Wood seems to be the most weather resistant insulating material, and most wildlife species prefer wood to metal or plastic structures. For most nest boxes, 3/4-inch rough-cut boards are best used for construction. Since cavity-nesting waterfowl do not carry nesting material to the nest, 3 to 4 inches of coarse sawdust or wood chips should be placed inside the nest box. Nest boxes intended for use by woodpeckers can be tightly packed with sawdust to resemble decaying woody material. Old nesting material should be removed at the start of each nesting season and replaced with fresh materials.

While many artificial nesting structures are designed for cavity-nesters, some provide nesting sites for other wildlife. Nesting platforms, baskets, and cylinders are used by waterfowl, raptors, and other species. If wire mesh is used as nest support material, the weave must be tight enough to prevent eggs and young from falling through the wire. Culverts are typically made of concrete, and some nesting baskets/boxes are made from plastic buckets or open metal tubs. Closed metal boxes are generally not used, since they trap excessive heat which can kill eggs and young and stress adults. Artificial burrows have a solid, plywood top and are buried about 6 inches underground to prevent trampling by livestock. Milk cartons should not be used as nest boxes.

Structure design

A wide variety of artificial nesting structure designs have been developed to accommodate cavity-nesting and other wildlife species. Designs range from simple platforms to complex, multicompartmented struc-

USFWS

Worker installing nest box for red-cockaded woodpecker.

tures. Some of these designs are more successful than others, and most can be built or acquired from a variety of suppliers. Design schematics for a number of structures are provided at the end of this leaflet in figures 2 through 11. Basic nest box designs can be modified to accommodate various species by altering dimensions or entrance hole sizes. The size of the entrance hole also influences the internal temperature of the box, predator accessibility, and use by competing nontarget species. Table 3 contains recommended nest box dimensions and entrance hole sizes for many cavity-nesting birds.

Below are some basic nest box design considerations:

- should be made of wood; cedar (preferred, most weather-resistant), cypress, redwood, or pine
- box should open from the side or top for maintenance and cleaning
- sides of nest box should enclose the floorboard (recessed a quarter inch) to prevent rain seepage
- nails, woodscrews, and hinges should be rust-proof
- entrance hole dimensions should accommodate the desired bird species; hole should not be large enough to allow competitors and predators access
- a double-thick entrance and extended roof to deter predators like squirrels and raccoons
- ventilation holes or slits at the top of both sides, just beneath the roof of the box
- four or five holes drilled into the bottom of the nest box to allow for drainage
- songbird nest box should not have a perch, which increases predator access; native songbirds do not use perches
- nest box should not be treated with green preservative, which is poisonous to birds
- nest box should not be painted on the inside or painted bright, unnatural colors on the outside (may attract predators or exotic species)

USFS

Prothonotary Warblers are secondary cavity nesters.

Placement

Habitat requirements of target wildlife species and available habitat greatly influence nesting structure placement. Some species seek secluded nesting sites, while others prefer to nest in more open areas. Species-specific nesting preferences should be considered when deciding where to install nesting structures. Table 4 provides habitat preferences and nest site characteristics for a variety of cavity-nesting birds.

Structures should be made available and ready for occupants before the breeding season begins. Since some bird species begin nest site selection as early as February, most nesting structures should be installed and/or made ready the previous fall or by late January.

Installation

When installing nest structures, landowners should consider height above the ground, orientation, predator guards, and preferred natural nesting sites. Woodpeckers and bats prefer nest boxes that face east, providing greater morning sun exposure. Most birds and mammals favor entrances that face away from prevailing winds. Landowners and managers should learn which natural habitat conditions are favored by the desired wildlife species. Cavity-nesting waterfowl nest on or near the water and often prefer nesting structures that face open water and are clear of overhanging branches. Where beavers occur, landowners should avoid attaching nest structures to aspen or other tree species that are preferred beaver food sources.

Nest structures can be attached to poles, posts, or pipes on land or in the water. Nest boxes can also be attached to trees; however, it is hard to install predator guards on tree trunks. Supports should be sturdy enough to keep the structure from swaying or tipping

Table 3 Nest box dimensions for some cavity-nesting birds

Species	Floor area (in)	Cavity depth (in)	Entrance height (in)	Diameter of entrance hole (in)
Wood duck *	8 by 12	15	9 1/2	3 by 4 oval
Hooded merganser *	10 by 12	23	17	4 by 3 oval
American kestrel	8 by 8	12–15	9–12	3
Barn owl *	12 by 40	15	7	6 by 6
Barred owl *	13 by 13	22–28	14–18	6–8
Saw-whet owl *	6 by 6	10–12	8–10	2 1/2
Screech owl *	8 by 8	12–15	9–12	3
Northern flicker *	7 by 7	16–18	14–16	2 1/2
Downy woodpecker **	4 by 4	8–10	6–8	1 1/4
Hairy woodpecker **	6 by 6	12–15	9–12	1 1/2
Lewis' woodpecker **	7 by 7	16–18	14–16	2 1/2
Pileated woodpecker **	8 by 8	16–24	12–20	3 by 4
Ash-throated flycatcher	6 by 6	8–10	6–8	2
Great-crested flycatcher	6 by 6	8–10	6–8	1 3/4
Brown-headed nuthatch ***	4 by 4	8–10	6–8	1 1/4
Pygmy nuthatch ***	4 by 4	8–10	6–8	1 1/4
Red-breasted nuthatch ***	4 by 4	8–10	6–8	1 1/4
White-breasted nuthatch ***	4 by 4	8–10	6–8	1 3/8
Tree swallow	5 by 5	8	6	1 3/8
Violet-green swallow	5 by 5	6–8	4–6	1 1/2
Eastern bluebird	5 by 5	6	10	1 3/8
Mountain bluebird	5 by 5	8–12	6–10	1 9/16
Western bluebird	5 by 5	8–12	6–10	1 1/2
Bewick's wren	4 by 4	6–8	4–6	1 1/2
Carolina wren	4 by 4	6–8	4–6	1 1/2
House wren	4 by 4	6–8	4–6	1 1/8
Black-capped chickadee	4 by 4	9	7	1 1/8
Carolina chickadee	4 by 4	9	7	1 1/4
Tufted titmouse	4 by 4	9	7	1 1/4

* Put 4 inches of wood chips or coarse sawdust in bottom of nest box annually.
** Fill nest box tightly with sawdust (preferred if outer material is bark).
*** Outer material should be bark.

Table 4 Habitat requirements and nest box placement for some cavity-nesting birds

Species	Nesting habitat and placement tips
Eastern bluebird Mountain bluebird Western bluebird	Open fields, meadows, backyards; old orchards; open rural country with scattered tree cover; place box 3–6 ft aboveground; entrance hole should face open areas, preferring east and north directions; Mountain and Western bluebirds may use some forest edge
American kestrel	Pastures, fields, and open meadows with grazed or mowed vegetation; place boxes on solitary trees or posts in open fields or along edge of woodlots 10–30 ft aboveground
Wood duck	Forested wetlands, swamps, ponds, lakes; place box in deciduous trees 6–30 ft aboveground, 30–100 ft from nearest water source; space boxes 100 ft apart
Hooded merganser Common merganser	Prefer secluded wooded waterways, lakes, faster-moving rivers; place box on tree up to 6–30 ft aboveground, within 30–100 ft of water source
Common goldeneye Barrow's goldeneye	Forested areas near permanent lakes and rivers and large, mature trees; place box in tree 6–30 ft aboveground, within 30–100 ft of water source
Screech owl	Forests, parks, woodland clearings, forest edges, especially in riparian areas; place box 10–30 ft aboveground facing north
Great crested flycatcher	Deciduous or mixed deciduous-coniferous forests and forest edges, woodlands; place box on post or tree at forest edge, 3–20 ft aboveground
Ash-throated flycatcher	Chaparral, mesquite thickets, savannas, deserts, and open deciduous and riparian woodlands; place box 3–20 ft aboveground
Northern flicker	Pastures, woodlands, forest edges; place box 6–30 ft aboveground on pole or tree at forest edge or along fence rows
Tree swallow	Open fields and other open habitats near riparian areas; place box on pole or post 5–15 ft aboveground with entrance hole facing east 30–100 ft apart
Violet-green swallow	Open or broken deciduous or mixed deciduous-coniferous forests, forest edge adjacent to open area; place box 9–15 ft aboveground
White-breasted nuthatch	Deciduous, mixed deciduous-coniferous forests, woodlands, forest edges, with mature stands and decaying trees; place box 3–60 ft aboveground, entrance hole should face away from prevailing wind
Red-breasted nuthatch	Coniferous and mixed deciduous-coniferous forests, aspen woodlands, mature stands with decaying trees; place box 5–40 ft aboveground, entrance hole should face away from prevailing wind
Pygmy nuthatch	Ponderosa, yellow, and Jeffrey pine forests, pinyon-juniper woodlands; place box 6–60 ft aboveground
Brown-headed nuthatch	Open stands of pines, mixed pine-hardwood woodland; place box 2–10 ft aboveground
Black-capped chickadee Carolina chickadee	Forests, woodlots, and areas with mature hardwood trees, forest edges, and meadows; area should receive 40–60% sunlight, and entrance hole should face away from prevailing wind
Mountain chickadee	Montane coniferous forests; place box 5–15 ft aboveground, preferably in a snag; entrance hole should face away from prevailing wind
Chestnut-backed chickadee	Coniferous and mixed deciduous-coniferous forests, usually near riparian areas; place box 2–15 ft aboveground; entrance hole facing away from prevailing wind
Carolina wren	Open deciduous woodlands (especially with thick underbrush), backyards, parks, gardens with trees or shrubs; place box 0–10 ft aboveground
Prothonotary warbler	Swampy lowland forests and river bottom woodlands subject to flooding; place warbler box 2–10 ft above or near water

over in high winds. Nest boxes can be attached to 4- by 4- or 4- by 6-inch treated wooden posts or trees by inserting a 4- to 6-inch lag bolt through a hole drilled in the back of the box, opposite the entrance hole. A large washer between the head of the lag bolt and the box should be used to secure the box to the support. The bolt should be checked each year and loosened as the tree grows. Wire should not be used to attach nest structures to live trees to avoid damaging the tree.

Many woodpecker species will take advantage of nest boxes if mature trees and snags in which to excavate cavities are not available. Boxes should be tightly packed with sawdust to simulate decaying wood inside snags and dead limbs. Woodpeckers prefer boxes with bark exteriors, placed on the south or east side of trees (to maximize exposure to the sun).

To ensure stability, the inside diameter of metal support poles should be at least 2 inches. Hex or carriage bolts can be used to attach structures to steel poles. Nest structures can be installed on or over water when it is iced over or when the water level is low. Nest boxes mounted over water should be 4 to 6 feet above the water surface to avoid flooding. A slight forward tilt can help drain the structure and keep out precipitation. A post driver can be used to drive wooden or metal posts into the substrate of ponds or wetlands. Utility or fire companies may be able to help landowners raise tall nesting structures, such as raptor and heron platforms.

Floating nest platforms are usually held in place by anchor chains, weights, or buoys. They should be anchored at least 25 feet from shore, in water that is at least 18 inches deep. Floating platforms should be removed before the first major freeze to prevent damage from ice action and fluctuating water levels.

Nest boxes for waterfowl should be placed in wooded areas close to or directly over water. Wood ducks, mergansers, buffleheads, and goldeneyes are tolerant of other nearby nesting species. Some waterfowl species exhibit a brood parasitism behavior known as dump nesting. Dump nesting occurs when a hen observes another female entering and exiting a nest box and is stimulated to lay her eggs in that nest. This behavior increases when several nest boxes are erected close to each other in highly visible areas. Studies show that hatching success decreases in areas with excessive dump nesting. It may be necessary to put a few nest boxes out in the open initially to attract nesting waterfowl. The nest boxes should be moved

Ducks Unlimited

Wood ducks readily use nest boxes.

C. Rewa

Wood duck nest box placed in a wooded wetland setting.

Wildlife Habitat Council

Wood duck hens may lay eggs in the nests of others (dump nesting) where boxes are positioned close to each other in open areas.

to more secluded spots along wooded edges close to water the season after nesting is observed. Once a female has successfully nested in a box, she is likely to return in following years.

Cavity-nesting waterfowl do not bring nesting materials to the nest. They use bark, decayed wood fibers, and other debris found in natural cavities and line the nest with down. Therefore, a 3- or 4-inch layer of coarse sawdust or wood chips should be added to boxes as nest building material.

Predator guards

Predators (both native and introduced) can limit the reproductive success of wildlife using natural nest sites and artificial nesting structures. The rough surface of wooden posts and trees makes climbing easy for terrestrial predators such as snakes, raccoons, and domestic cats.

Artificial nesting structures, especially those close to water, should be fitted with predator guards to reduce the likelihood of nest predation. Heavy plastic, aluminum sheet metal, and other materials can be used to construct predator guards. Newspaper printers are good sources for large quantities of discarded aluminum sheet metal. Metal poles are more difficult to climb, but should at least be covered with repeated applications of axle grease where effective predator guards are difficult to install.

There are three basic types of predator guards: the conical guard, the pipe (sandwich) guard, and sheet metal tree band guard (fig. 1). Other structures such as coarse wire mesh extending out from around the nest box entrance hole may be used to prevent raccoons and other predators from reaching into the nest box.

In addition to installing predator guards to discourage ground-dwelling predators, overhanging or low branches near nesting structure should be removed to discourage access by arboreal predators.

Monitoring and maintenance

Nesting structures can be monitored throughout the nesting season to track use and nest success, remove undesirable exotic species, and to clean the structure after young are fledged to make it available for late and second nesting attempts. Some birds and mammals tolerate limited levels of human disturbance, such as occasional (once a week or once every 10 days) nest checks, but others do not. Nest checks should be completed quickly to minimize stress on parent birds and young. Intrusive monitoring of sensitive species (ferruginous hawks, ospreys, and barn owls) should be limited to prevent nest abandonment.

Parasites cause problems for some nesting birds. To check for blowfly larvae, mites, and other pests, gently lift the nest off the box floor and tap it lightly. After the pests drop to the box floor, sweep them out of the box. Since birds have a poor sense of smell, adults do not generally abandon nests that have been handled in this manner.

Well-built nesting structures can last 10 to 15 years if properly maintained. After a brood has left the structure, the old nesting material should be cleaned out to make room for a second clutch. Nest structures should be checked at least once per year before the

C. Rewa

Predator guards help reduce loss of eggs and young to predation.

NRCS

Monitoring and maintenance can help ensure success of wood duck boxes and other nesting structures.

Figure 1 Conical predator guard

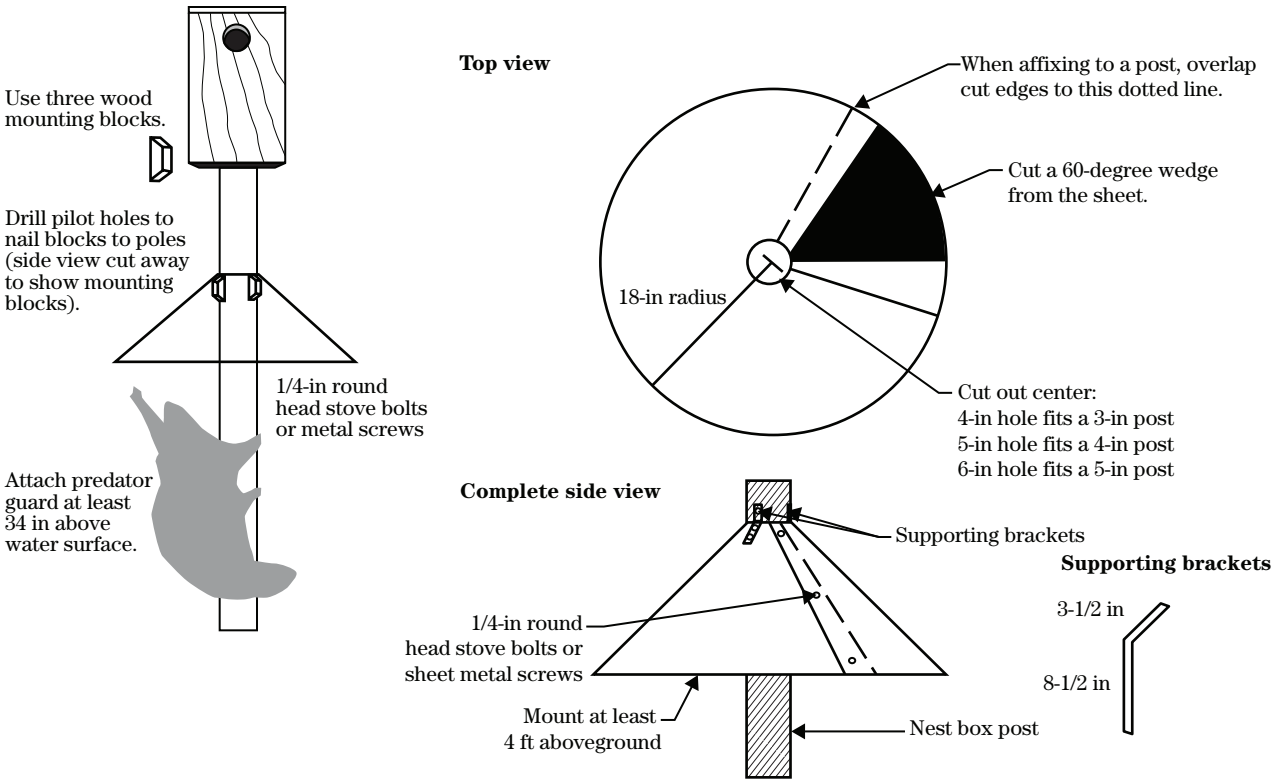

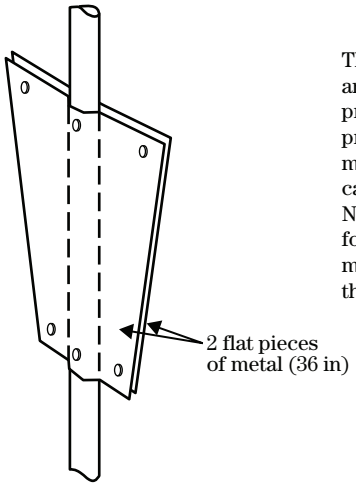

The pipe, or sandwich guard (left), and the sheet metal ban guard (right) provide alternatives to the conical predator guard. Heavy plastic, sheet metal, aluminum, and other materials can be used to make predator guards. Newspaper printers are good sources for large quantities of aluminum sheet metal, which is used in printing and then recycled.

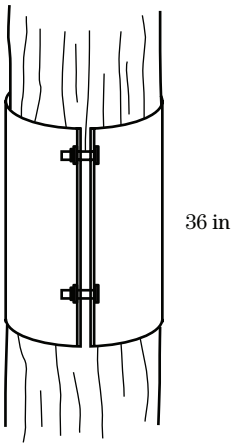

breeding season starts to remove old nesting materials, mouse nests, insects, and other debris. Place fresh wood chips, shavings, or sawdust in nest boxes, if appropriate. Replacement parts and other repairs can be made to nest structures during annual maintenance checks. Nest monitoring results can be used by local birding organizations and state and Federal government agencies to keep track of reproductive success and wildlife population trends.

Competitors

Competition for nest sites is often high among cavity-nesting wildlife species. Birds, small mammals, and insects compete for suitable sites. Deer mice and squirrels often inhabit nest structures during the winter months, and their nests should be removed during annual maintenance inspections if they are not the target species. House sparrows and European starlings are not native to North America but thrive in backyard and suburban areas, frequently taking over nest sites used by native songbirds. House sparrows will kill the parents and young of bluebirds, chickadees, house wrens, and other native birds. An entrance hole diameter of less than 1-1/4 inches can preclude house sparrows from using nest boxes, but also excludes some native cavity-nesting birds. European starlings can be excluded by entrance hole diameters of no greater than 1-1/2 inches. Special starling guards are available to protect entrance holes of purple martin houses and other nesting structures.

If a house sparrow or starling nest is found during routine nest monitoring, the nest and its contents should be removed. These two introduced species are often persistent nesters and are not protected by Federal law. Live trapping and humane destruction may be necessary in areas highly populated by house sparrows and starlings (traps are available at bird specialty stores). Local authorities can help landowners dispose of the birds properly. Frozen birds can be donated for scientific use, and to academic institutions or raptor rehabilitation centers.

Wasps and bees also build nests in birdhouses. These insects can be discouraged by soaping the inside top of nest boxes. If insects such as paper wasps establish a nest in a vacant box, a low toxicity insecticide can be sprayed inside the box in the early morning (when the insects are still cold and sluggish) and the nest can be removed. Annual maintenance and monitoring help detect colonies of wasps and bees.

Wikimedia Commons

Nonnative house sparrows aggressively compete for nest sites with native species.

U.S. Forest Service

American kestrel young in nest box.

Types of artificial nesting structures

Nest box

Nest boxes are probably the most common and easily recognized artificial nesting structures used today. Over 50 species of birds including waterfowl, raptors, songbirds, and woodpeckers are known to use nest boxes. Some government and nonprofit organizations may supply nest boxes and/or building materials at no charge or at a reduced rate. Local community groups like scouts and ornithological society chapters can help landowners construct and erect nest boxes.

Like natural nesting cavities, nest boxes should not have perches mounted at the entrance hole. Box construction should limit the amount of light and precipitation that can enter the box. During construction, four quarter-inch holes should be drilled in the bottom of the nest box for drainage, and ventilation slits should be provided on both sides just under the roof overhang. Hardware cloth attached to the inside front of waterfowl nest boxes serves as exit ladders for ducklings. A variety of nest box designs are provided at the end of this leaflet in figures 2 through 11, and box dimensions for various species are listed in table 3.

Nest shelf

Nest shelves are used by American robins, eastern phoebes, and barn swallows. Since these species use mud in nest construction, nearby mud puddles or other water sources may enhance the attractiveness of nest shelves. Some birds prefer shelves placed under building overhangs or eaves, adjacent to open areas. Old nesting material should be removed after the breeding season is complete. A design for a typical nest shelf is provided in figure 3.

Nesting platform

Ospreys, ferruginous hawks, golden eagles, great horned owls, great gray owls, great blue herons, black-crowned night herons, double-crested cormorants, egrets, and occasionally bald eagles have been known to nest on platforms when suitable natural nest sites are limited or unavailable. Sticks are frequently wired to the platform to simulate previous use, which is attractive to these species. Nest platforms can be mounted on a single pole, a solid base such as a tree or tripod, or for species that nest along coastal or inland waterways, marine navigational structures. Figure 4 illustrates a nesting platform.

Great horned owl and great gray owl nesting platforms

Great horned owls and great gray owls do not build their own nests. Both species typically use nests abandoned by red-tailed hawks, goshawks, eagles, and other large raptors. Artificial nesting platforms and cones are also used.

Great horned owls prefer platforms lodged in mature hardwood trees 15 to 50 feet above the ground. Nest sites should be relatively free from human disturbance, and foraging habitat should be available nearby. Platforms in quiet woodlot edges, shelterbelts with mature trees, and windbreaks are examples of suitable nesting sites.

Great gray owls prefer nest sites located in the interior of coniferous forests. Nesting platforms should be placed in mature trees at least 15 feet above the ground.

Amoco

Many floating platform designs are used to provide suitable waterfowl nesting sites.

C. Rewa

Baskets provide nesting sites attractive to waterfowl.

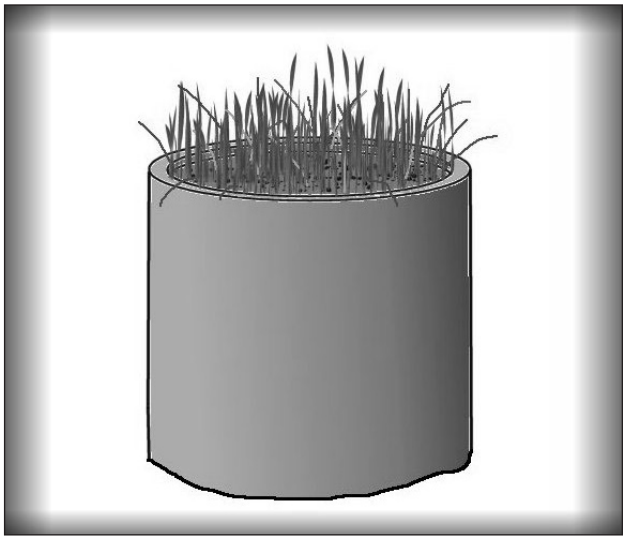

Concrete waterfowl nesting culvert.

C. Rewa

Waterfowl nesting cylinder or hen house.

Floating platform

Many waterfowl species choose natural nesting sites on islands or along shorelines of lakes, ponds, rivers, and streams. Most waterfowl favor sites sheltered from prevailing winds, and preferred nesting cover varies with species. Floating platforms offer alternative nesting sites that provide protection from many predators. Floating platforms are used by common loons and Canada geese in areas where water levels fluctuate. Mallards, black ducks, pintails, blue-winged teal, and canvasbacks may also use floating platforms. Aquatic vegetation such as rushes and cattails can be secured to floating platforms in northern lakes to attract nesting loons. Canada geese prefer platforms covered with grass, straw, or hay. Nest material can be wired to the bottom of the platform to prevent it from blowing off. Other waterfowl species and turtles may use floating platforms for loafing. A floating nesting platform design is shown in figure 5.

Nesting baskets, cylinders, and culverts

Nesting baskets and tubs (both metal and fiberglass) are used by ducks (primarily mallards) and geese. Mallard nest baskets should be installed over water at least 10 feet from the land. Baskets or tubs attached to wood or metal supports should be at least three feet above the surface of the water to prevent flooding. Straw, hay, or grass nesting material should be replaced annually. About 10 drainage holes must be punched into the bottom of the tub. A 6-inch-wide by 4-inch-high escape notch should be cut out of the side of the tub to allow goslings and ducklings to exit. The tub may be painted a natural earth tone (brown, gray, or dark green). If the tub is attached to a floating platform, the platform must be anchored to the bottom at opposite ends in 2 to 4 feet of water. Floating structures and nesting baskets should be installed in areas where view of other similar structures is obstructed.

C. Rewa

Open water deployment of waterfowl nest cylinders reduces nest depredation by avian predators and raccoons.

Hen houses, or nesting cylinders, are suitable nest sites for waterfowl species that favor overhead nesting cover. The house is basically a 3-foot-long cylinder made of rolled fencing wire and hay, dried grass or other vegetation. Cylinders can be mounted on wooden boards attached to poles protruding from the water. Pipes or poles supporting the hen house should extend at least 3 feet above the surface of the water to prevent flooding. Basic designs for nesting baskets and cylinders are shown in figure 6.

Concrete culverts can be used to make suitable nesting structures for some ducks and geese. To construct a nesting structure, the culvert is to be set on end and filled with soil. Vegetation preferred by the target species should be planted in the top layer of soil. Culverts require little annual maintenance and are usually installed in about 18 inches of water along shorelines of lakes, ponds, and wetlands. The culvert should extend far enough above the water to prevent flooding or easy predator access. It may take 1 or 2 years before there is adequate vegetation cover to attract nesting waterfowl.

Bat houses

Forty percent of bat species in the United States are rapidly declining or endangered because of habitat loss and destruction of roosts and hibernacula. Bats are nocturnal mammals that depend on roosts in natural tree cavities, caves, hollow trees and sloughing tree bark, and manmade structures such as attics, mines, and bridges. Daytime roosts are used for migrating and bachelor colonies, as well as summer maternity (or nursery) colonies. Artificial roosting structures, referred to as bat houses, can serve as effective roosts and nursery areas. Pairing two or more bat houses back-to-back or on the same building provides a variety of temperatures for different roosting needs. Pivot-pole systems are the easiest method to raise or lower single or paired houses for maintenance.

Basics of bat house design—Most bat houses, or bat boxes, are made of wood. Typically, exterior-grade plywood that has not been pressure-treated is used. Listed below are some basic guidelines for building bat houses. For more detailed information, contact Bat Conservation International (BCI) or visit their Web site at *http://www.batcon.org*.

- Internal roosting partitions should be properly spaced, 3/4 to 1 inch apart for bat species in the United States, to conserve heat.
- Internal roosting partitions should be roughened with a saw or chisel to create footholds for bats. Use a 1/8- to 1/4-inch plastic mesh as a substitute.
- For houses in regions where average July temperatures exceed 85 degrees Fahrenheit, include vents 6 inches from the bottom of the house. Front vents should be as long as the box is wide; side vents should be 6 by 1/2 inch.
- A partial bottom can be added to houses in colder, northern climates to increase the internal temperature of the house. The bottom should be angled at 45 degrees or greater to allow guano to fall out of the house. Attach the bottom with rust-proof hinges and secure with a hook-and-eye latch for easy maintenance.
- Apply three layers of a dark colored exterior paint to the outside of the bat house; dark brown or black for houses in the north and east, medium to light brown for houses in the south and southwest. An aluminum roof may need to be installed (for shade) over houses in regions with high summer temperatures.

Bat house on a pivot pole.

- All exterior surfaces should be caulked and sealed to prevent heat loss from inside the house and precipitation from leaking into the house.
- Perform routine, annual maintenance on the bat house such as caulking, painting, and general repairs.

Bat house placement—Install bat houses 2 to 6 weeks before spring or before bats are evicted from an attic or barn. Bat houses should be installed on a 4- by 4- or 4- by 6-inch pressure-treated wooden post or a metal pole with an inside diameter greater than 2 inches (for stability). Houses should be installed in open woodlots, old orchards, farmlands, or backyards within one-quarter mile of a lake, pond, stream, or wetland.

Bat houses placed on poles, under building overhangs, or on the sides, of buildings are occupied more successfully than those houses mounted on trees. The bottom of the house should be 12 to 15 feet above the ground and located in ample sunlight. Northern and eastern bat houses should receive at least 8 hours of direct sunlight per day and face south or southeast for the maximum amount of solar radiation. Warmer climates should receive 6 or more hours of direct sunlight and face east or southeast. In the hottest climates, 4 or 5 hours of direct sunlight is acceptable.

Bat houses should be checked at least twice a month in the summer with a flashlight in daylight hours to count adult bats and young. Houses should be checked at least once during the fall and once during the winter to check for migrating and overwintering bats. Bats are sensitive to excessive human disturbance. For large colonies, count the bats as they emerge from the house at dusk.

To determine if a house contains a nursery colony (late May through June), check the house 45 minutes after sundown after the adults have left to feed. The young are pink and flightless and cling to the insides of the house.

Diagrams for building bat houses are provided in figure 7. For additional information on bat biology, conservation, and research, see U.S. Fish and Wildlife Habitat Management Leaflet No. 5, Bats, or go to Bat Conservation International's Web site at *www.batcon.org*.

Purple martin housing standards

Today, purple martins depend on humans to supply them with suitable nest sites. For more detailed information about purple martins, helpful management tips, and housing specifications and diagrams, contact the Purple Martin Conservation Association (PMCA) at the Edinboro University of Pennsylvania at 814–734–4420, or visit the PMCA Web site at *http://www.purplemartin.org*.

Paul Jung

Purple martin.

The PMCA has developed a set of biologically sound housing (for compartment or gourd system) standards for purple martins. Listed below are some purple martin housing basics. These birds have additional housing needs, and PMCA literature addresses those issues.

Housing materials: Although aluminum housing is often preferred for its ease of maintenance and accessibility, untreated wood apartments are also commonly used. Cypress and cedar are recommended, but pine and redwood are also used. The exterior of the apartments should be painted white. The interior should have no treatment, stain, or paint. Wood floors with a rough surface prevent nestlings from developing

Dave Holmes

Aluminum purple martin house.

splayed legs. If the housing is made of plastic, the exterior should be a light color or white. The plastic should be opaque. Translucent plastic overheats quickly, killing the eggs and nestlings, or stressing the incubating parent martin. Gourds are also used as purple martin apartments.

Compartment size: A martin house contains at least four to six compartments, and the minimum size for each compartment is 6 by 6 by 6 inches. Larger compartments offer better protection from weather and predators.

Entrance hole: Purple martins use round entrance holes with diameters ranging from 1-3/4 to 2-1/4 inches. Most housing features 2-1/8-inch diameter entrance holes. Door plugs should be used in the winter to close compartments to house sparrows, starlings, and other winter occupants. The entrance hole should be 1 to 1-1/2 inches above the floor of the compartment.

Height and placement of housing: Housing should be erected 12 to 20 feet above the ground on a metal pole or pressure-treated wood post set into the ground with concrete. The house should not sway or tip in high winds. The house should be placed in an open area at least 40 feet away from trees, but within 100 feet of human activity (home, marina).

Other considerations: Landlords should install a pole predator guard to discourage terrestrial predators. The compartments should have ventilation holes under the roof overhang and drainage holes in the compartment floor. Porch railings are desirable.

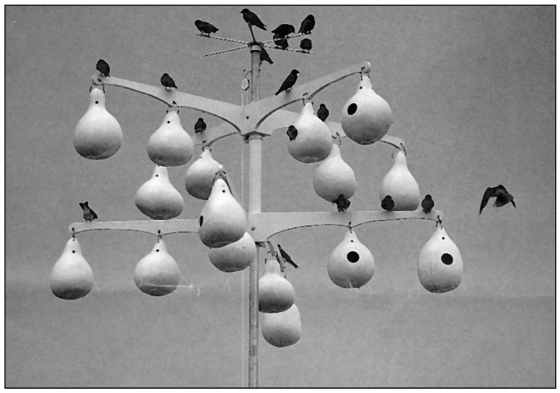

Wildlife Habitat Council

Purple martins on gourd housing structure.

The martin housing must be able to be lowered and raised vertically to perform routine maintenance, cleaning, and nest monitoring. Housing on a winch or lanyard system or on a telescoping pole is highly recommended. House sparrows and European starlings frequently take over housing, so the landlord must check for nests, eggs, or occupants on a regular basis. Perches are not recommended since they attract these exotic species.

Artificial burrows

Artificial burrows are used by a variety of ground-dwelling animals. Most artificial burrows are built of plywood and buried at least 6 inches below the ground surface. For a more natural appearance, a small mound of soil should be built up around the entrance hole to simulate natural excavation by some other animal. Artificial burrows are generally constructed of wood. Plastic tubing at least 8 inches in diameter can also be used. The burrow should be placed on a relatively high, well-drained location and checked annually for repairs.

Landowner assistance

There are a variety of private and public organizations that provide technical and/or financial assistance to landowners and managers who want to enhance existing wildlife habitats by erecting artificial nesting structures. Local chapters of ornithological societies, such as local Audubon chapters or birding clubs, can help landowners construct and install the appropriate nesting structures. State wildlife agencies can also help landowners identify wildlife needs and assess available habitat. Local hardware stores, home improvement stores, lumberyards, or pipe manufacturers may be willing to donate materials needed to construct a large quantity of nesting structures. Boy Scout and Girl Scout troops may wish to help land managers build and install artificial nesting structures. Local utility companies may also be willing to assist landowners erect raptor and heron platforms or other tall, hard to install nest structures.

There are numerous groups and organizations that supply information about the biology of specific species, as well as detailed instructions for building nesting structures to attract the desired species (table 5).

Conclusion

Artificial nesting structures are not meant to replace suitable habitat, but rather to enhance existing habitat and increase the nesting success of a particular species. Basic habitat management techniques for improving habitat for a variety of wildlife species and groups are provided in other habitat management leaflets in this series. These leaflets contain information about specific species that use artificial nesting structures, such as the wood duck (No. 1), eastern bluebird (No. 2), and American kestrel (No. 3). These leaflets are available at *www.whmi.nrcs.usda.gov* and at *www.wildlifehc.org*.

Landowners and managers must be patient when attempting to attract wildlife to artificial nesting structures. It can take a year or two for the desired species to take notice of new nesting structures. Human activities that disturb nesting activities should be restricted in the vicinity of structures during the breeding season.

Quality of construction is important. The type of materials used, entrance hole dimensions (if applicable), attachments, and predator guards contribute to the effectiveness and longevity of the structure and the reproductive success of the targeted wildlife species.

By considering the biology and habitat requirements of the desired species, landowners and managers can maximize the benefits of using artificial nesting structures for wildlife.

Table 5 Groups and organizations that design artificial nesting structures for specific wildlife species

Group name	Contact information	Web site
Bat Conservation International (BCI)	P.O. Box 162603 Austin, Texas 78716-2603 phone: 512–327–9721 fax: 512–327–9724	*http://www.batcon.org*
Purple Martin Conservation Association (PMCA)	Edinboro University of Pennsylvania Edinboro, PA 16444 phone: 814–734–4420	*http://www.purplemartin.org*
North American Bluebird Society (NABS)	P.O. Box 74 Darlington,WI 53530–0074	*http://www.nabluebirdsociety.org*
The Eagle Institute	P.O. Box 182 Barryville, NY 12719 phone: 914–557–6162	*http://www.eagleinstitute.org*
National Audubon Society	700 Broadway New York, NY phone: 212–979–3000 fax: 212–979–3188	*http://www.audubon.org*

References

Online resources

Grondahl, C., and J. Dockter. Building nest structures, feeders, and photo blinds for North Dakota wildlife. North Dakota Game and Fish Department, Bismarck, ND. *http://www.npwrc.usgs.gov/resource/tools/ndblinds/ndblinds.htm*.

Hill, J.R. III, and L. Chambers. 2000. The PMCA's best martin management tips. *http://www.purplemartin.org/main/besttips.html*.

Hoffman, T. Using barn owls for rodent control. *http://members.tripod.com/Tommy51/aboutbarnowls.html*.

Printed sources

Henderson, C.L. 1992. Woodworking for wildlife. Minnesota Department of Natural Resources. St. Paul, MN.

Kiser, M. 2000. Pole mounting tips. The Bat House Researcher Vol. 8, No. 2. Bat Conservation International, Austin, TX.

Kiser, M., and S. Kiser. 2000. Cold climate modification for nursery houses. The Bat House Researcher Vol. 8, No. 2. Bat Conservation International, Austin, TX.

Mueller, J. 1999. American kestrel. USDA Natural Resources Conservation Service Wildlife Habitat Management Institute and Wildlife Habitat Council, Fish and Wildlife Habitat Management Leaflet, No. 3.

Mueller, J. 1999. Bats. USDA Natural Resources Conservation Service Wildlife Habitat Management Institute and Wildlife Habitat Council, Fish and Wildlife Habitat Management Leaflet, No. 5.

Mueller, J. 1999. Eastern bluebird. USDA Natural Resources Conservation Service Wildlife Habitat Management Institute and Wildlife Habitat Council, Fish and Wildlife Habitat Management Leaflet, No. 2.

Payne, N.F. 1992. Techniques for wildlife habitat management of wetlands. McGraw-Hill, New York, NY.

Payne, N.F., and F.C. Bryant. 1994. Techniques for wildlife management of uplands. McGraw-Hill, New York, NY.

Rewa, C. 1999. Wood duck. USDA Natural Resources Conservation Service Wildlife Habitat Management Institute and Wildlife Habitat Council, Fish and Wildlife Habitat Management Leaflet, No. 1.

Tuttle, M.D., and D. Hensley. 1993. The bat builder's handbook (2000 revision). Bat Conservation International, Austin, TX.

Figure 2 Typical nest box design

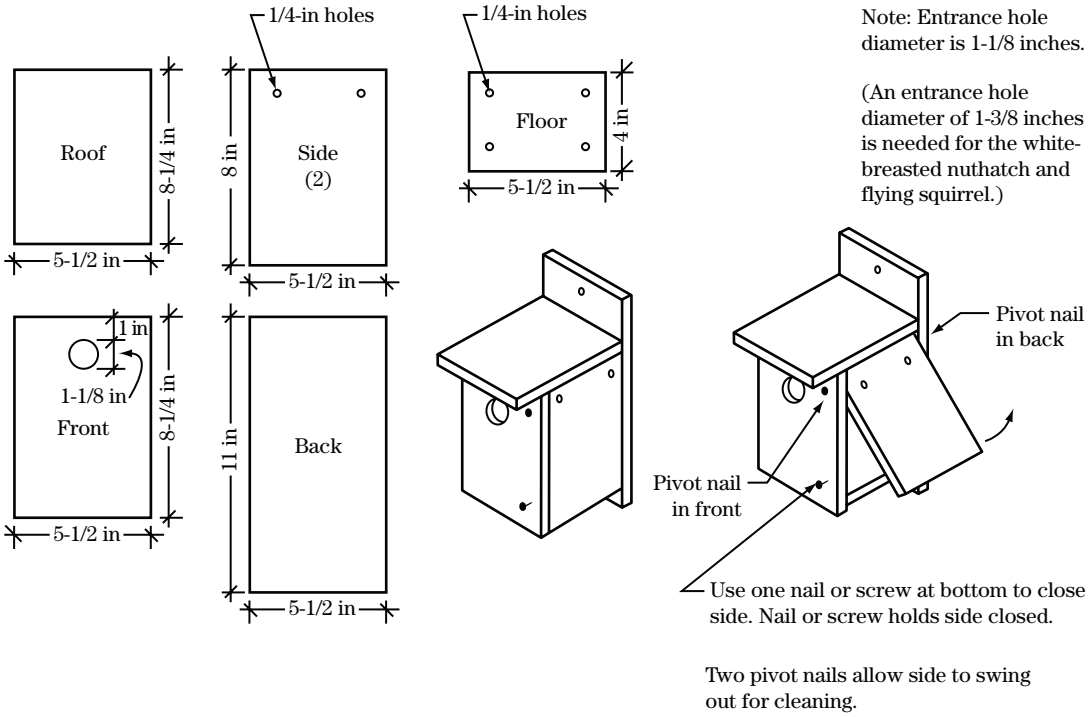

Lumber: One 1 inch by 6 inch by 4 foot

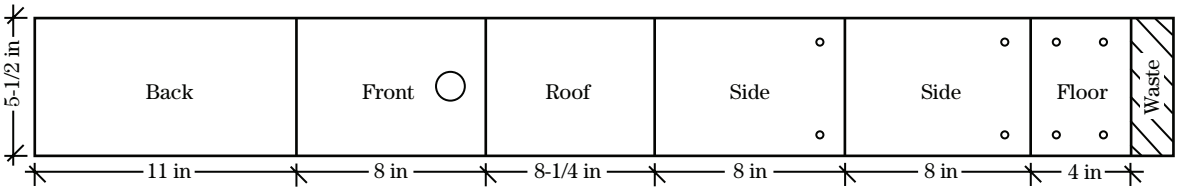

Please note that any birdhouse entrance 1-1/4 inches in diameter or larger will admit house sparrows. All wren and chickadee nest boxes should have an entrance hole of 1-1/8 inches in diameter.

Missouri Department of Natural Resources

Figure 3 Nesting shelf designs for American robin, eastern phoebe, and barn swallow

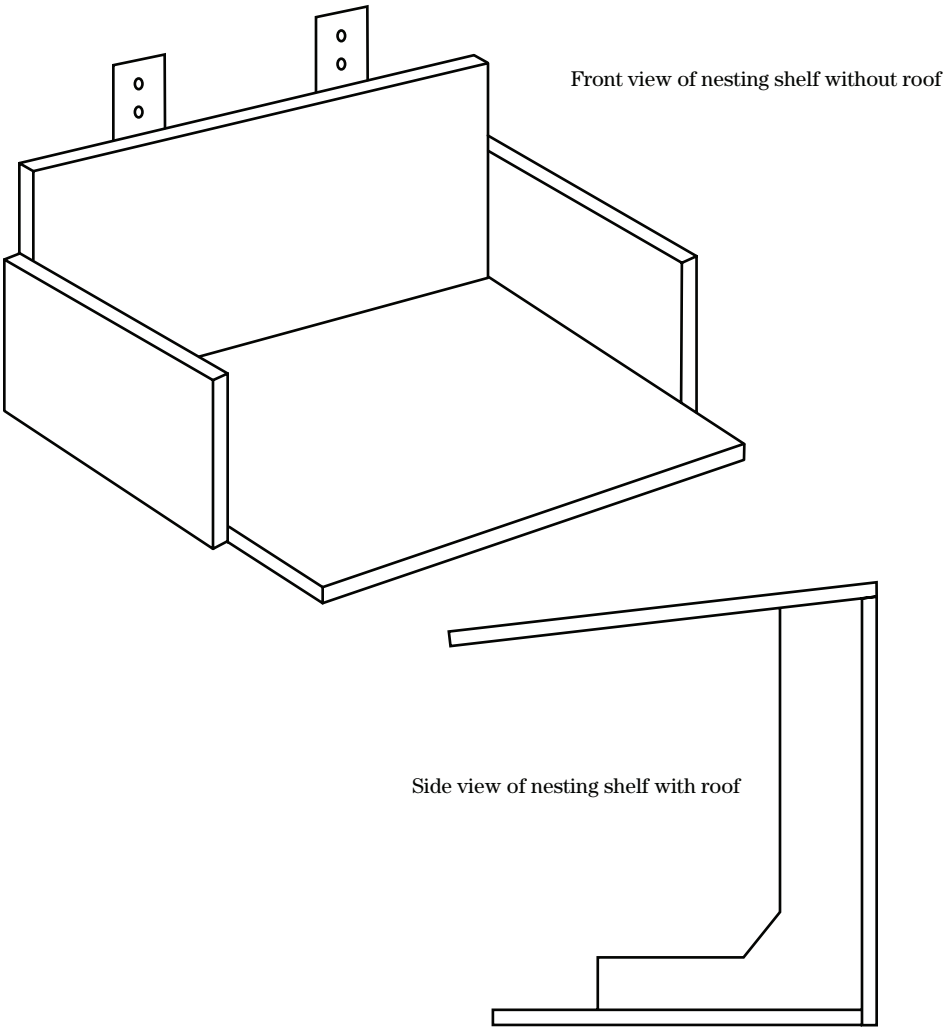

Nesting shelf dimensions and mounting height

Bird species	Floor dimensions (in)	Front height (in)	Mounting height (ft)
American robin	6 by 8	8	6 to 15
Eastern phoebe	6 by 6	6	8 to 12
Barn swallow	6 by 6	6	8 to 12

Place shelf on side of building with vertical or horizontal brackets.

Figure 4 Nesting platform design

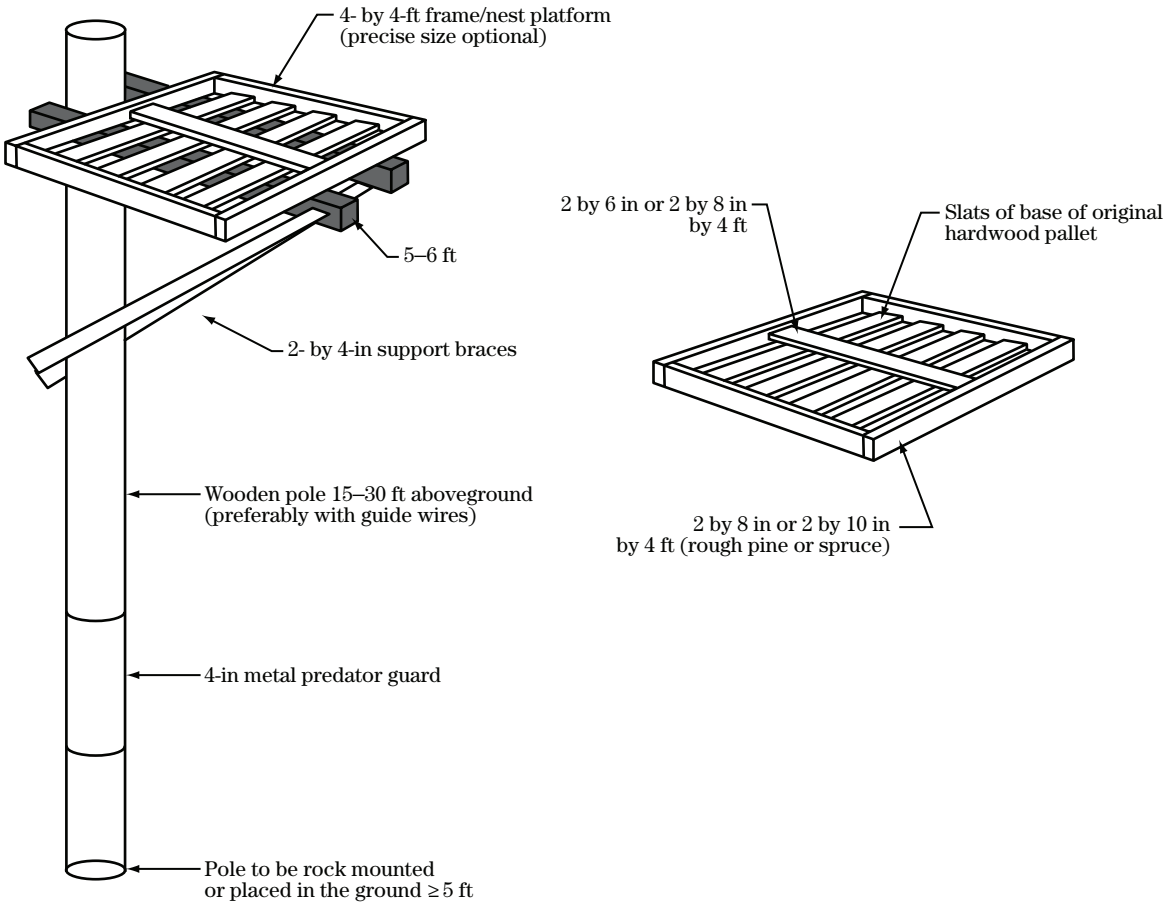

Figure 5 Floating platform

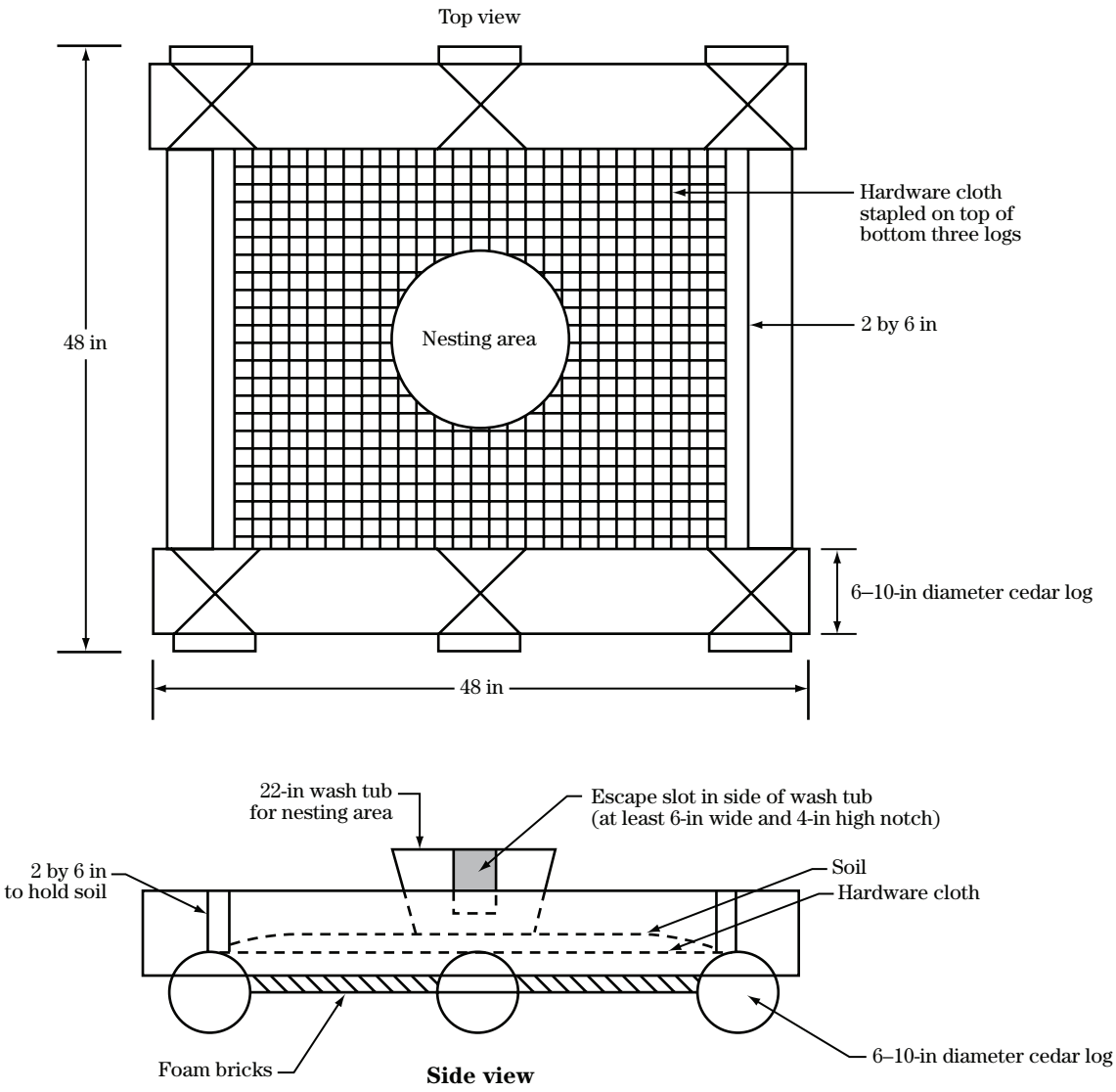

Construction notes:

- Fill the spaces between the logs on top of the hardware cloth with soil or peat (3–4 inches) and plant with sedges, rushes or marsh fern.
- Place an armful of hay in the center nesting area on top of soil to form nest. A 22-inch diameter wash tub can be used as a nesting area, provided a 6-inch square hole is cut in the side to facilitate escape of goslings.

Figure 6 Waterfowl nesting basket and cylinder, or hen house

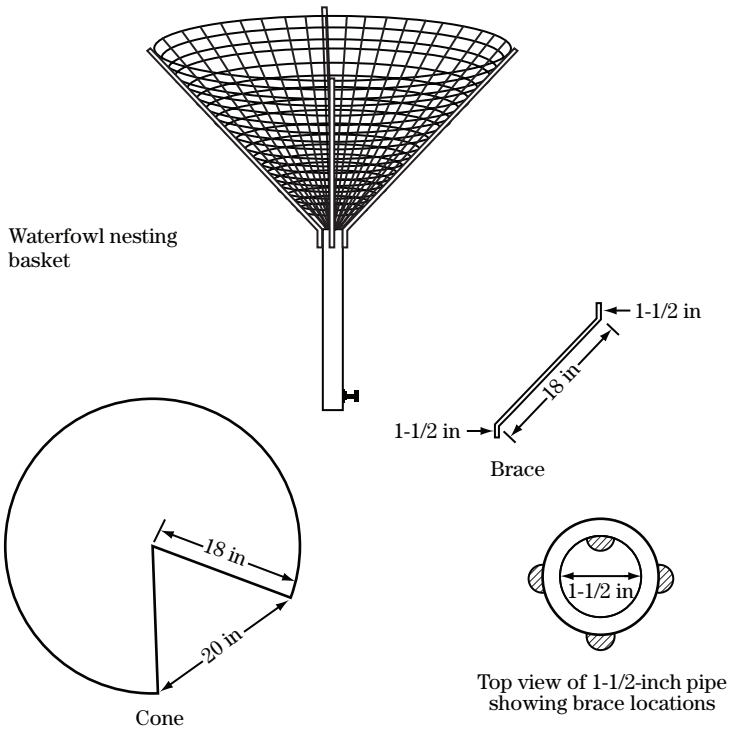

Add straw or hay nesting material before the nesting season.

Waterfowl nesting cylinder, or hen house

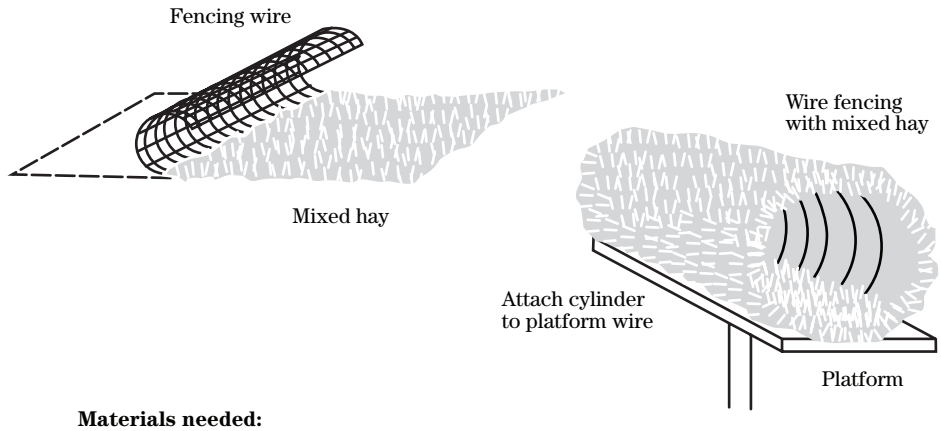

Materials needed:

- 7-foot piece of 2- by 2-inch mesh-welded plastic coated garden fencing (36 inches wide).
- 1- by 6-inch by 3-foot treated board.
- Pipe flange attached to the bottom center of the board which is driven into the marsh to stand 3 feet above the water.
- 4-foot by 1-inch steel pipe screwed into the flange.
- Marsh hay. If marsh hay is not available when rolling the wire into a cylinder, use "ditch grass" or "horse hay" such as a timothy orchardgrass mixture. **Do not use straw.**
- When wire is rolled, a cylinder which is 36 inches long by approximately 12 inches in diameter should be produced.

Figure 7 Bat house design

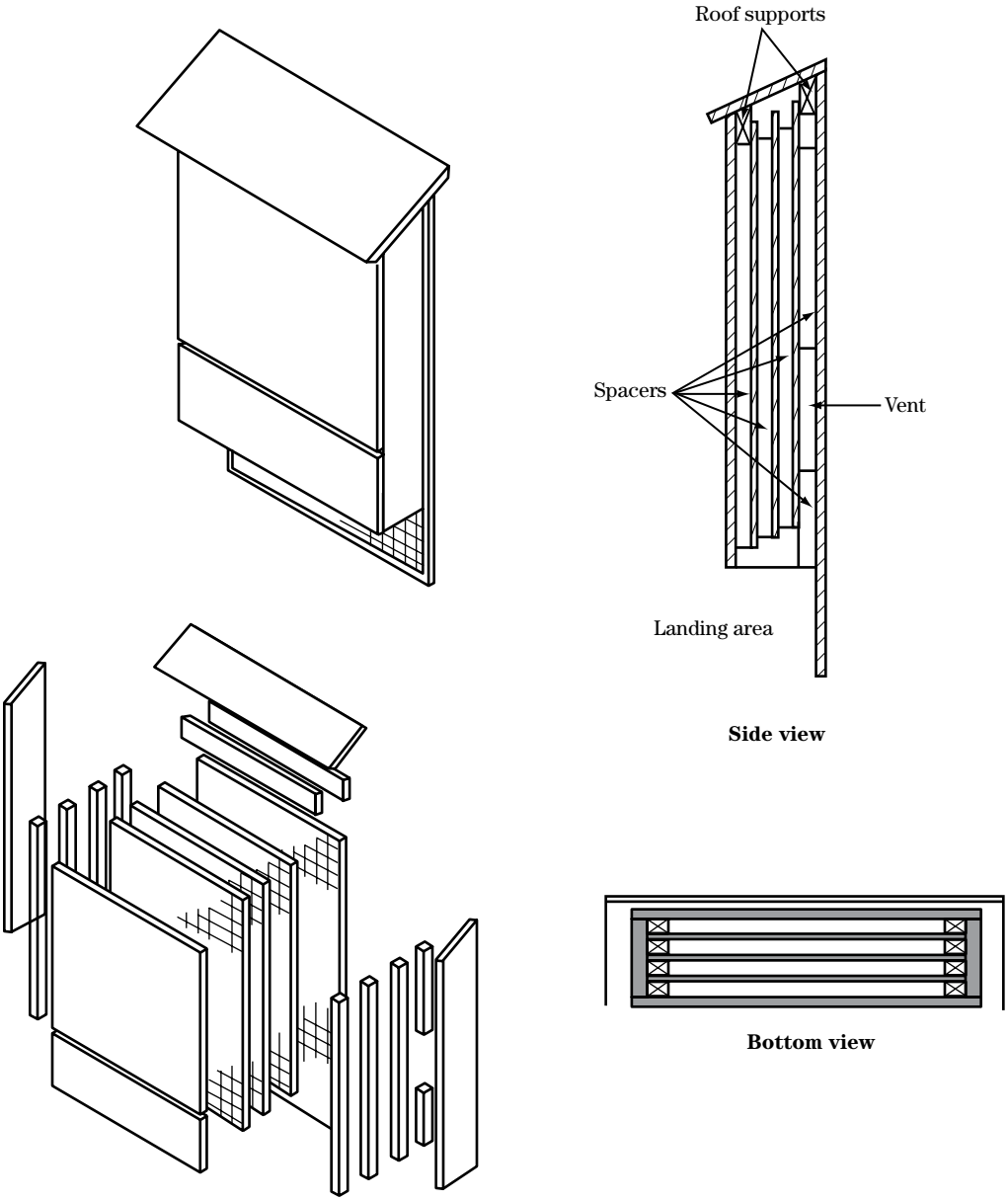

Bat Conservation International

Step 1 Measure and mark all wood as per cutting diagrams. Cut out all parts.

Step 2 Cut six pieces of netting 14 by 21 inches. Staple to partitions.

Step 3 Screw back to sides, caulking first. Be sure top angles match.

Step 4 Cut a piece of netting 16 by 30 inches and staple to inside surface of the back. Be sure netting lies flat and does not pucker.

Step 5 Construct house as per drawings. Place spacers on partitions, screw top front piece to sides, then screw bottom front piece to sides to create a half-inch vent between the two pieces. Attach supports, attach roof.

Step 6 Caulk between roof and sides, sides and front pieces, and sides and back pieces to seal the nursery house tight.

Figure 7 Bat house design—Continued

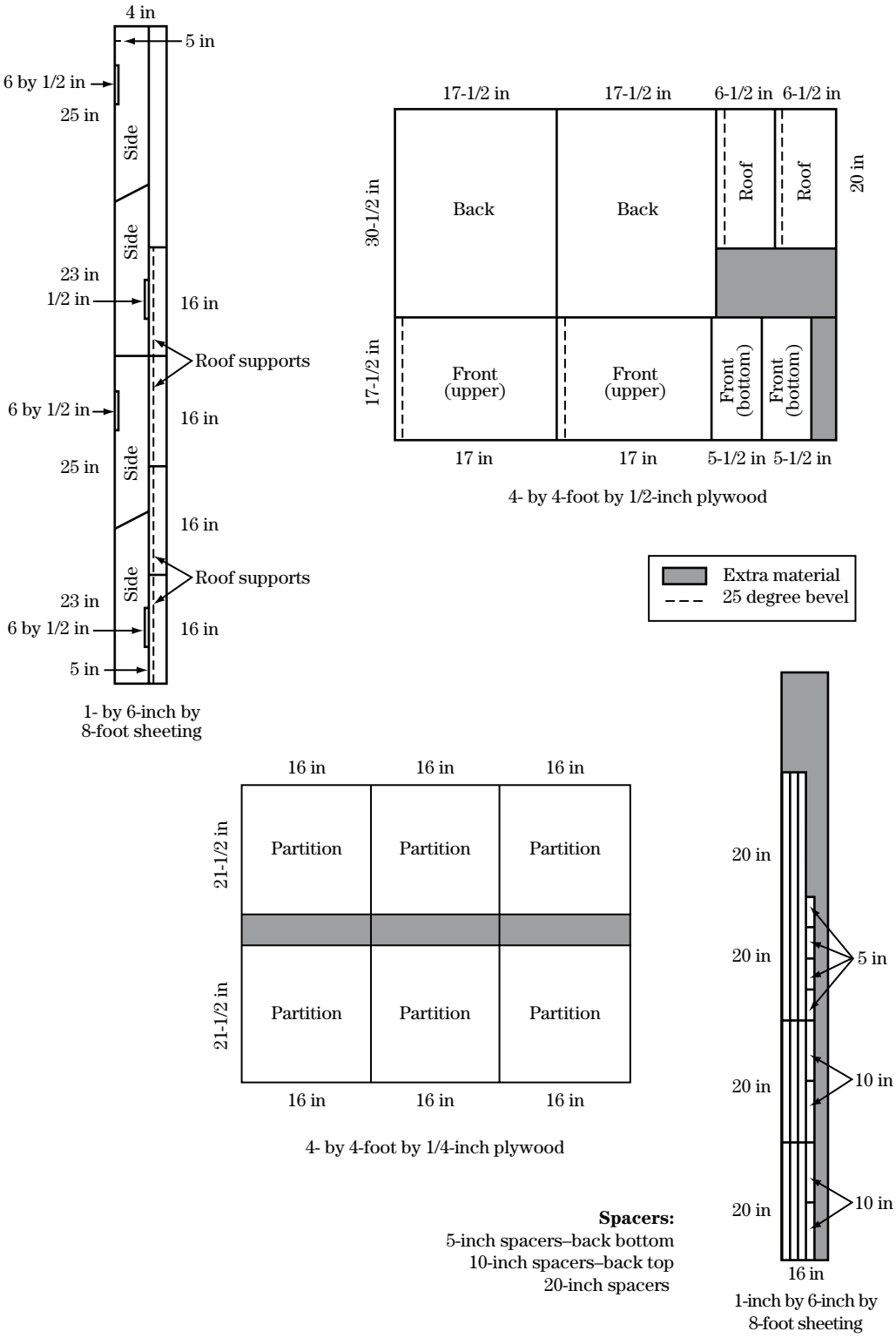

Figure 8 Wood duck nest box design

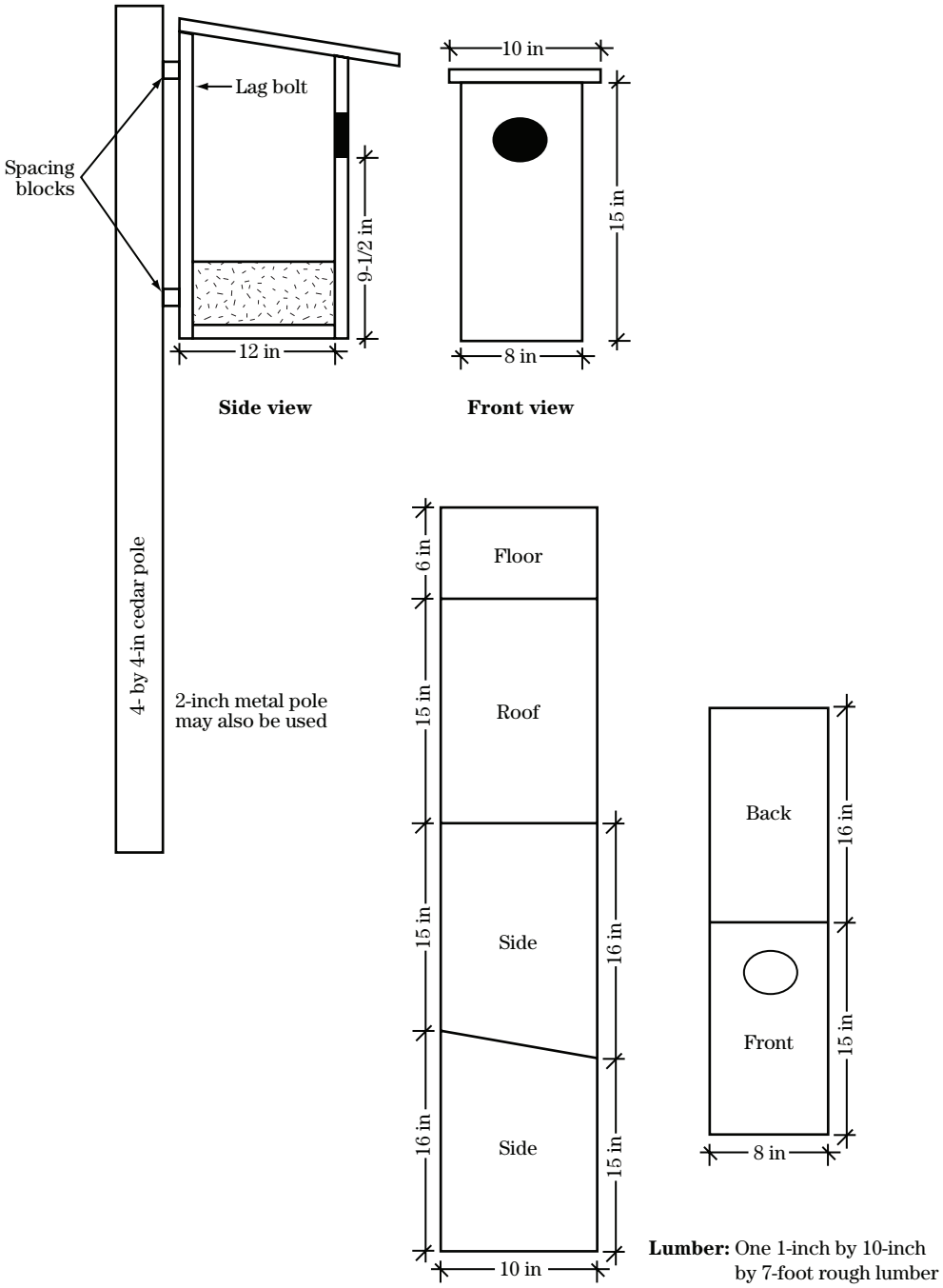

Figure 9 Nest box design for American kestrel, boreal owl, northern saw-whet owl, screech owl, fox squirrel, gray squirrel, and red squirrel

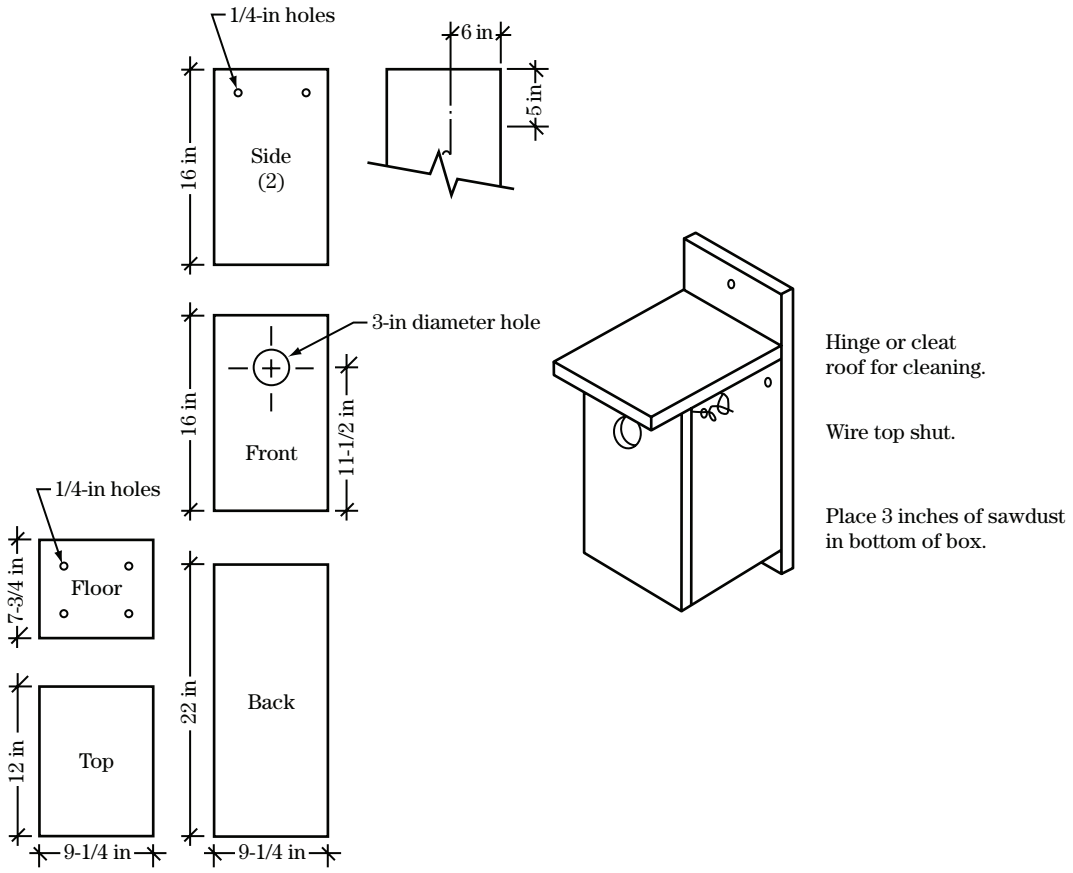

Lumber: One 1 inch by 10 inch by 8 foot

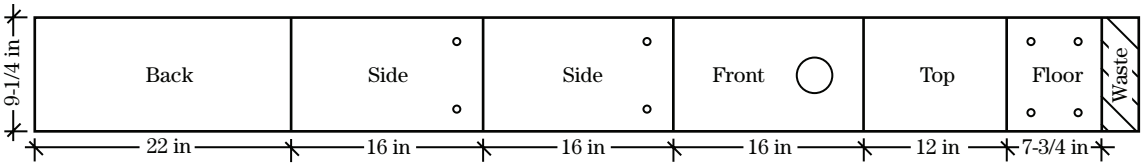

Minnesota Department of Natural Resources

Figure 10 Barn owl nest box design based on T. Hoffman, Using Barn Owls for Rodent Control

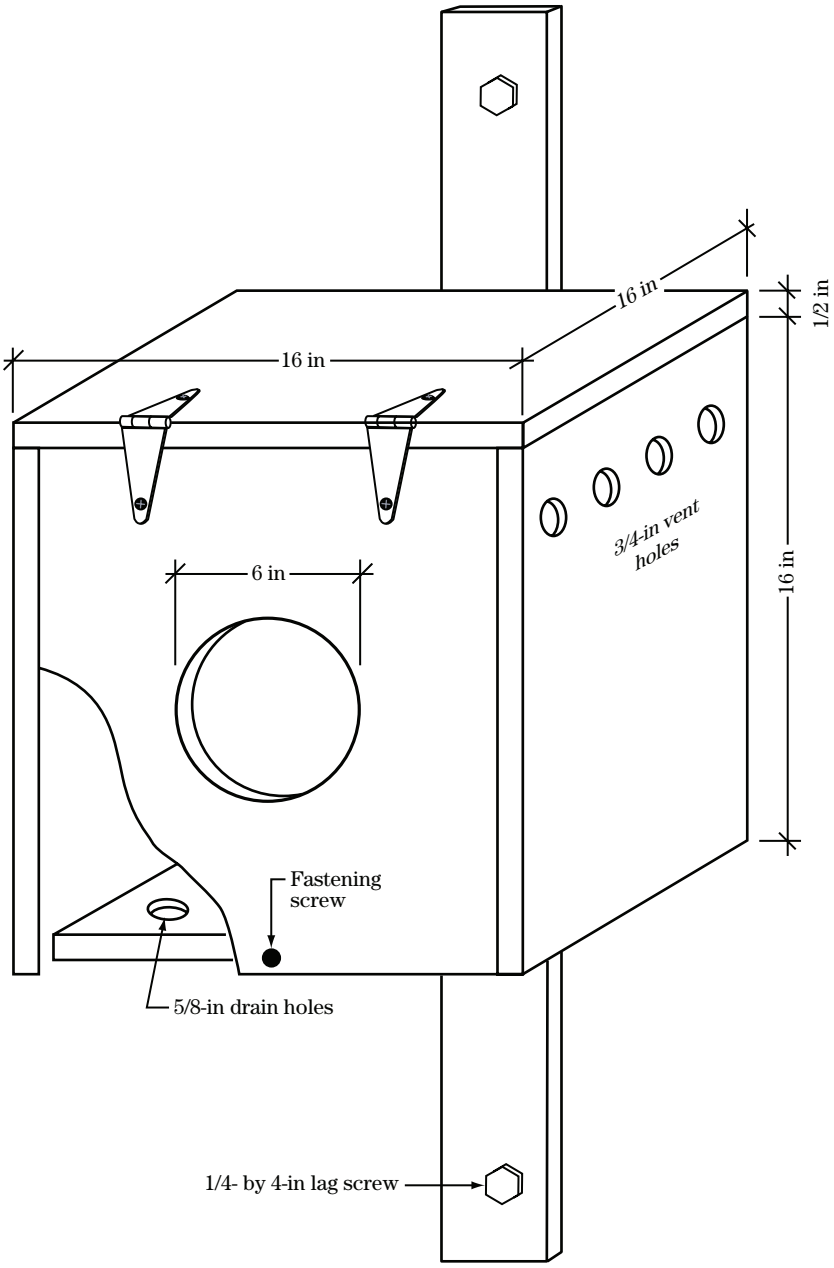

A barn owl nest box. The 24-inch cube requires 1-1/2 sheets of half-inch plywood.

Figure 11 Nest box design for eastern bluebird, great crested flycatcher, and tree swallow

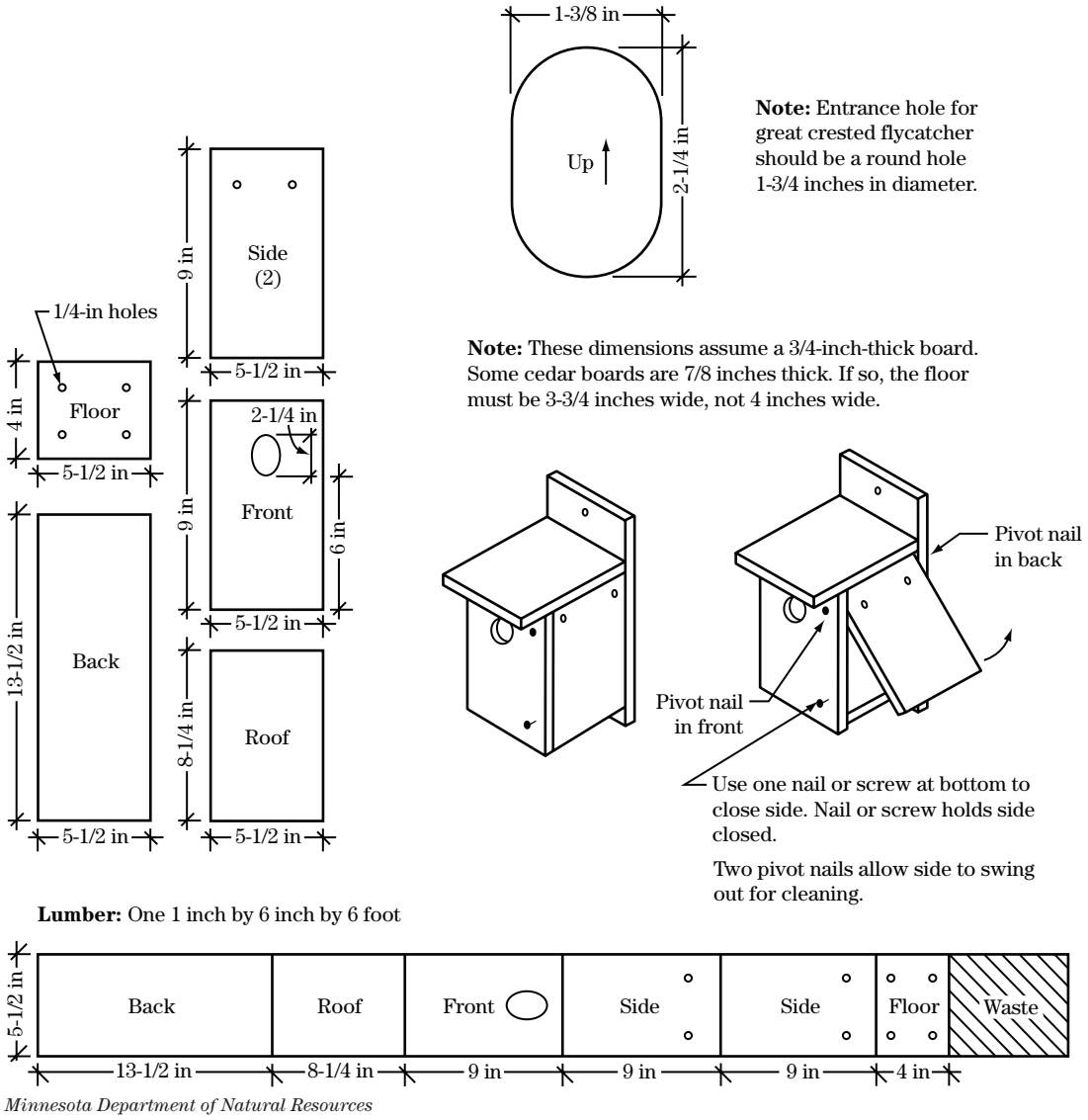

Minnesota Department of Natural Resources

Natural Resources Conservation Service

Mailing address:

P.O. Box 2890
Washington, DC 20013

Street address:

14th and Independence Avenue SW
Washington, DC 20250

The Natural Resources Conservation Service provides leadership in a partnership effort to help people conserve, maintain, and improve our natural resources and environment.

www.nrcs.usda.gov

Wildlife Habitat Council

8737 Colesville Road, Suite 800
Silver Spring, MD 20910

(301) 588–8994

The mission of the Wildlife Habitat Council is to increase the amount of quality wildlife habitat on corporate, private, and public land. WHC engages corporations, public agencies, and private, nonprofit organizations on a voluntary basis as one team for the recovery, development, and preservation of wildlife habitat worldwide.

www.wildlifehc.org

This leaflet is a revision of a leaflet that was developed cooperatively by the Wildlife Habitat Council (WHC) and the U.S. Department of Agriculture (USDA) Natural Resources Conservation Service (NRCS), Agricultural Wildlife Conservation Center (AWCC) (formally Wildlife Management Institute) and formatted for printed or electronic distribution in April 2004. The original leaflet was authored Holly L. May (WHC), and reviewed by Sheryl Ducommon (Bat Conservation International), Rob Pauline (WHC), Charlie Rewa (AWCC), and Tina Phillips (Cornell Laboratory of Ornithology). The revised leaflet was edited by Bill Hohman (NRCS), Lynn Owens (NRCS), and Suzi Self (NRCS), and the figures were redrawn by Wendy Pierce (NRCS).

The U.S. Department of Agriculture (USDA) prohibits discrimination in all its programs and activities on the basis of race, color, national origin, age, disability, and where applicable, sex, marital status, familial status, parental status, religion, sexual orientation, genetic information, political beliefs, reprisal, or because all or a part of an individual's income is derived from any public assistance program. (Not all prohibited bases apply to all programs.) Persons with disabilities who require alternative means for communication of program information (Braille, large print, audiotape, etc.) should contact USDA's TARGET Center at (202) 720–2600 (voice and TDD). To file a complaint of discrimination, write to USDA, Director, Office of Civil Rights, 1400 Independence Avenue, SW., Washington, DC 20250–9410, or call (800) 795–3272 (voice) or (202) 720–6382 (TDD). USDA is an equal opportunity provider and employer.