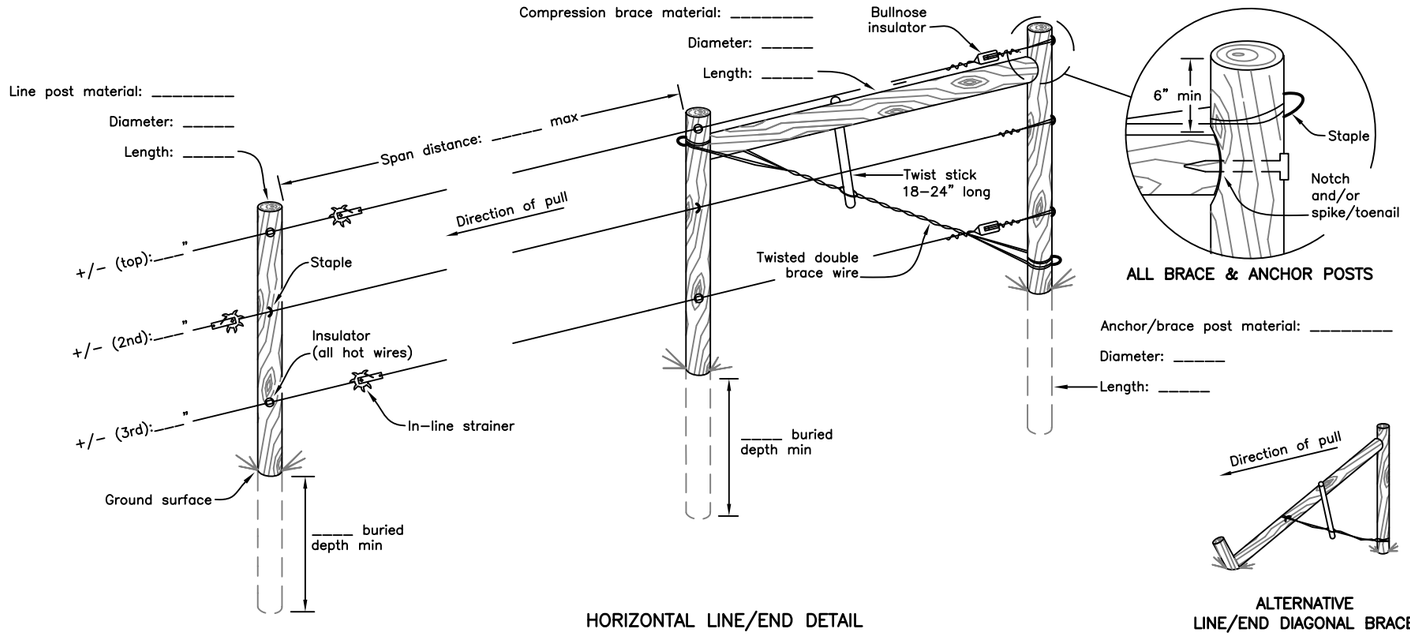

HORIZONTAL LINE/END DETAIL

ALTERNATIVE
LINE/END DIAGONAL BRACE

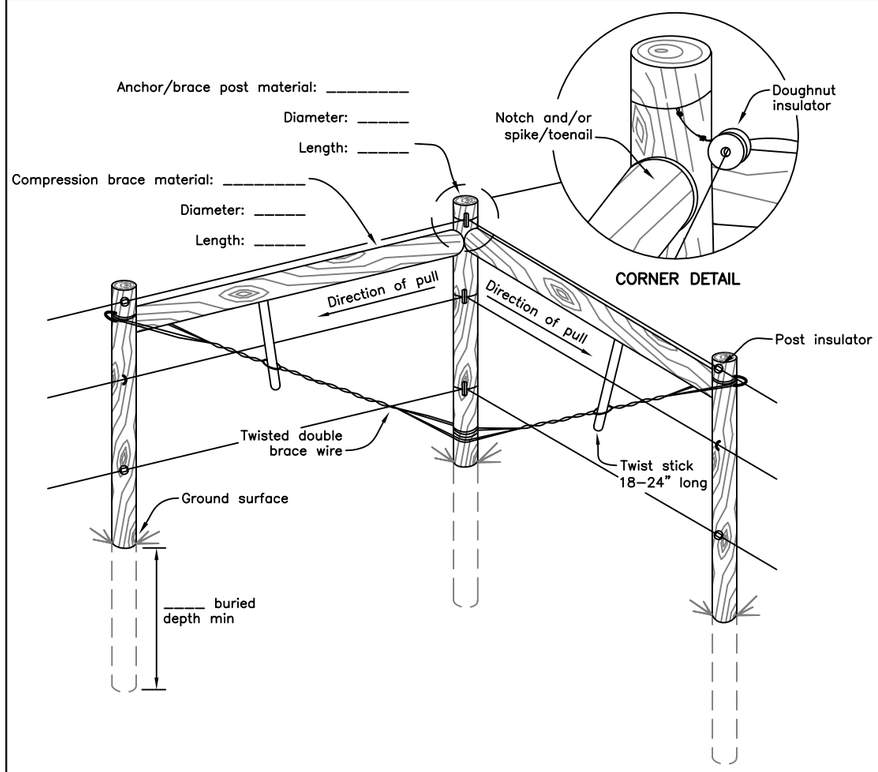

CORNER DETAIL

HORIZONTAL CORNER BRACE DETAIL
Corner angle 90° or less

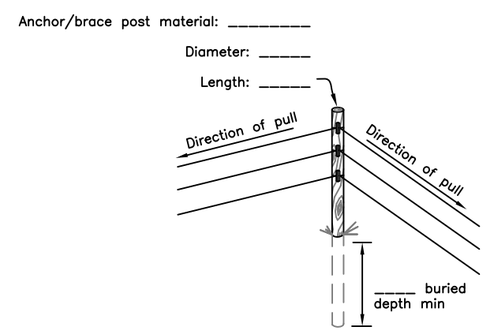

ALTERNATIVE
SINGLE POST CORNER BRACE
Corner angle 90° or less

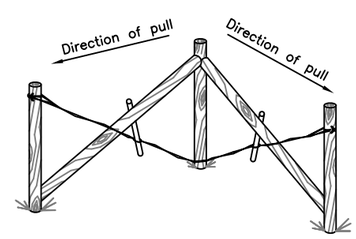

ALTERNATIVE
DIAGONAL CORNER BRACE
Corner angle 90° or less

NOTE: See attached sheet for corner braces greater than 90°.

Fence Design:	Planned	Installed
Fence Height		
Wire Spacing (top to bottom)		
Total Length		
Wire (type / gauge):		
Number of rolls @_per roll		
In-line Strainers: Amount		
Strainer Tightener/handle		
Insulators:		
Bullnose: Amount / Type		
Doughnut: Amount / Type		
Post: Amount / Type		
Energizer (type):		
Output (volts or joules)		
Grounding Rod Material		
Amount / Size		
Lightning Diverter		
Line Posts (material):		
Diameter		
Length		
Buried Depth		
Distance Between Posts		
Post Clips: Amount / Type		
Braces (amount/style):		
Locations		
Material		
Brace Wire Type		
Compression Brace Length		
Compression Brace Diameter		
Anchor/brace Length		
Anchor/brace Diameter		
Anchor/brace Buried Depth		
Corner Posts (amount/type):		
Diameter		
Length		
Buried Depth		
Gates (amount/type):		
Gate Handles		
Cutoff Switch		
Joint Clamps: Amount/Type		
Underground Cable: Length		

Notes:

Not to scale. Standardized drawing must be adapted to specific site.

I have reviewed and approve these plans and agree to construct in accordance with them:

owner/operator _____ date _____ Job class _____

CAD FILE NAME 3wire power.dwg

DRAWING NO. MT-382-016

SHEET ___ OF ___

DATE:

DESIGNED _____

DRAWN Andrew Malucelli 4/08

CHECKED _____

APPROVED _____

3-WIRE POWER FENCE DETAILS

FIELD(S): _____ CIN #: _____

OP: _____ COUNTY _____ RHODE ISLAND

NRCS
Natural Resources Conservation Service
United States Department of Agriculture

Print Drawing

Clear Drawing